THIS DRAWING IS UNPUBLISHED. RELEASED FOR PUBLICATION -
© COPYRIGHT copyright_dBYe- ALL RIGHTS RESERVED.

REVISIONS					
P	LTR	DESCRIPTION	DATE	DWN	APVD
	2	UPDATED	31JAN2018	CD	EH
	A	REVISED PER ECR-18-017862	22NOV2018	SR	DD
	B	REVISED PER ECR-19-008311	06JUN2019	SR	DD
	B1	REVISED PER ECR-19-015297	01OCT2019	SB	DD

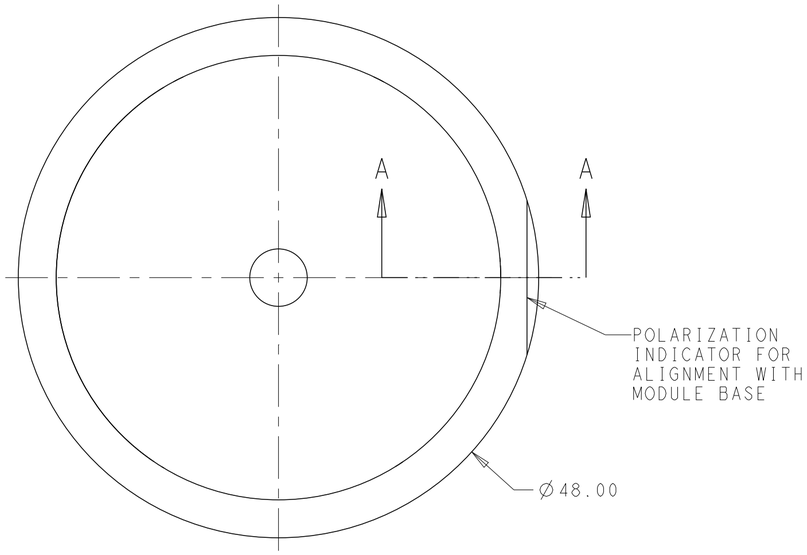

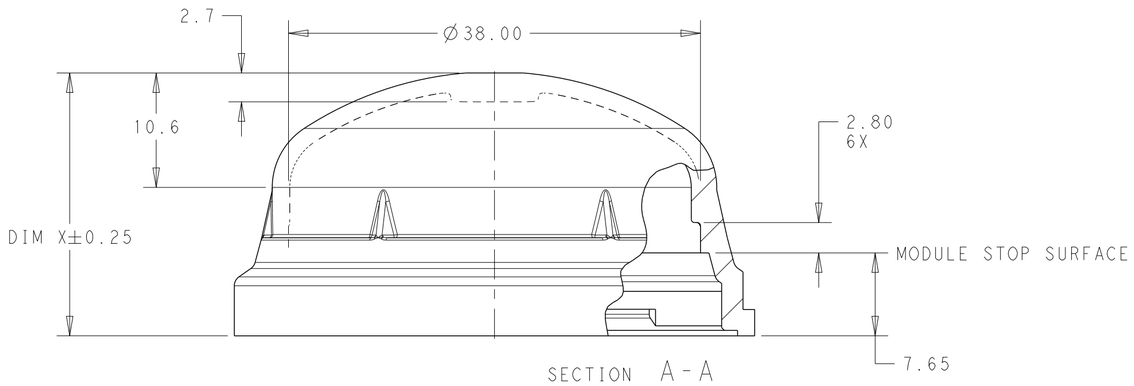

SECTION A-A

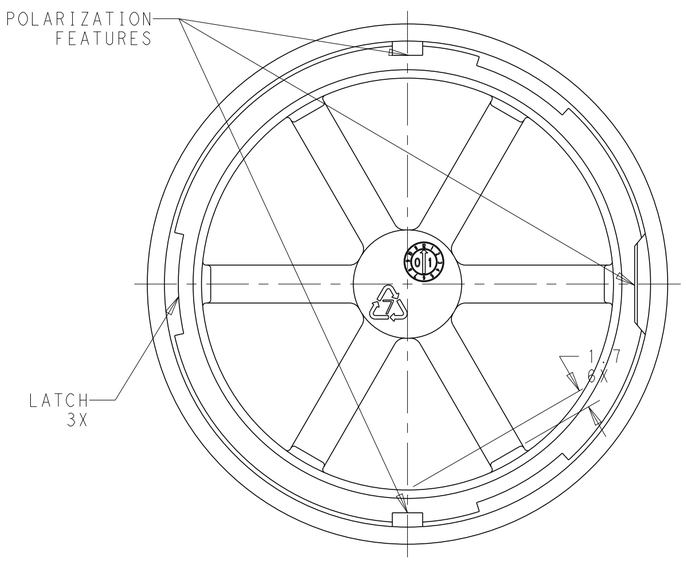

1. MATERIAL:
   -POLYCARBONATE COLOR: SEE TABLE
2. MUST COMPLY WITH DIRECTIVE 2002/95/EC (ROHS)
3. THIS PRODUCT HAS NOT COMPLETED VALIDATION TESTING
4. MODULE BASE TE P/N: 2213837-1
5. PACKAGED 66 PER PLASTIC TRAY
   DIM X = 24.25 - 7 TRAYS PER BOX
   DIM X = 39.25 - 4 TRAYS PER BOX
6. PRELIMINARY

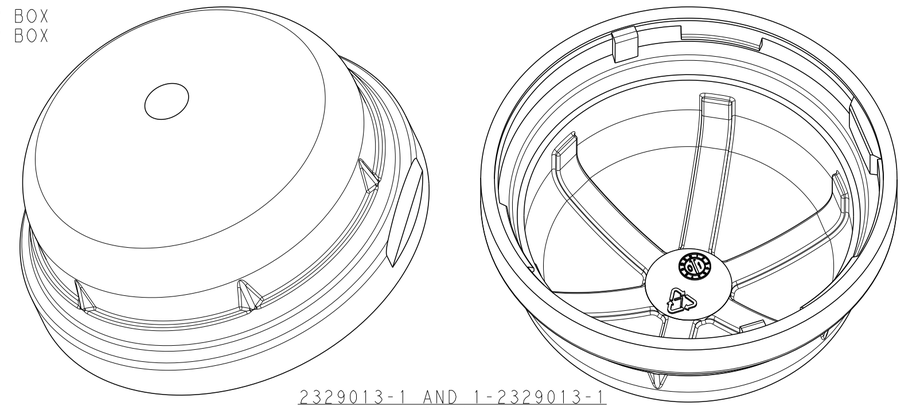

2329013-1 AND 1-2329013-1
SHOWN
SCALE 2:1

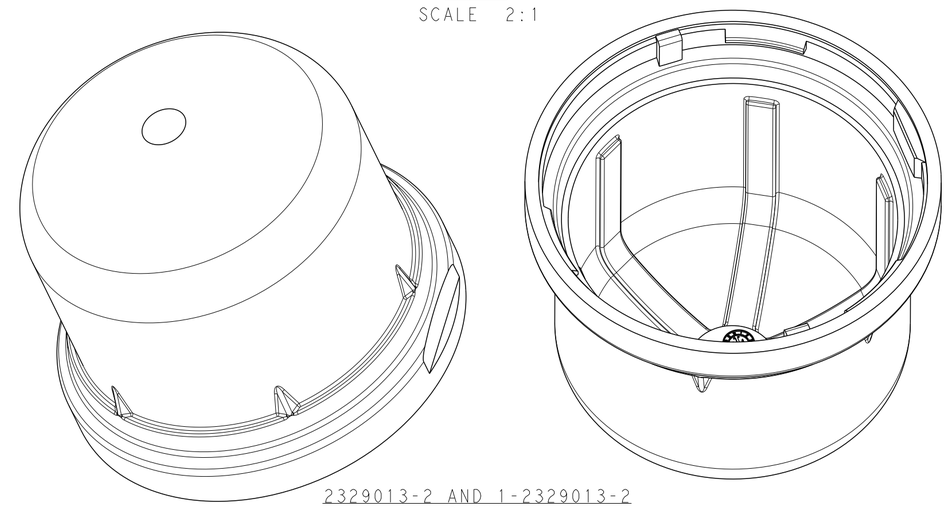

2329013-2 AND 1-2329013-2
SHOWN
SCALE 2:1

APPROX. LIGHT TRANSMISSION	COLOR	DIM X	PART NO.
26%	TRANSLUCENT GRAY	39.25	2-2329013-2 6
26%	TRANSLUCENT GRAY	24.25	2-2329013-1 6
78%	TRANSPARENT CLEAR	39.25	1-2329013-2
78%	TRANSPARENT CLEAR	24.25	1-2329013-1
24%	TRANSPARENT SMOKE	39.25	2329013-2
24%	TRANSPARENT SMOKE	24.25	2329013-1

THIS DRAWING IS A CONTROLLED DOCUMENT.

DIMENSIONS: mm

TOLERANCES UNLESS OTHERWISE SPECIFIED:
0 PLC ±-
1 PLC ±0.2
2 PLC ±0.10
3 PLC ±-
4 PLC ±-
ANGLES ±1°

MATERIAL: SEE TABLE
FINISH: - -

DWN C.DAILY 10JAN2018
CHK MOSTOLLER 10JAN2018
APVD -
PRODUCT SPEC 108-133073
APPLICATION SPEC 114-133074
WEIGHT -

TE Connectivity

NAME: DOME, LUMAWISE ENDURANCE S, 40mm
-

SIZE	CAGE CODE	DRAWING NO	RESTRICTED TO
A2	00779	C-2329013	-

CUSTOMER DRAWING | SCALE 5:2 | SHEET 1 OF 1 | REV B1

1471-9 (3/13)