2.5-V INTEGRATED REFERENCE CIRCUIT

FEATURES

- **Excellent Temperature Stability**
- **Initial Tolerance: 0.2% Max**
- **Dynamic Impedance: 0.6 Ω Max**
- **Wide Operating Current Range**
- **Directly Interchangeable With LM136**
- **Needs No Adjustment for Minimum Temperature Coefficient**

D OR PW PACKAGE
(TOP VIEW)

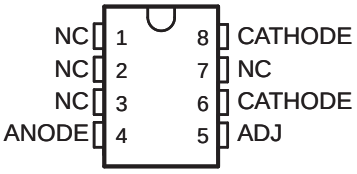

NC − No internal connection

LP PACKAGE
(TOP VIEW)

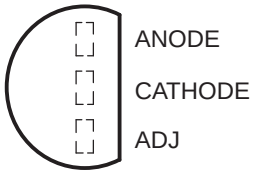

DESCRIPTION/ORDERING INFORMATION

The LT1009 reference circuit is a precision-trimmed 2.5-V shunt regulator featuring low dynamic impedance and a wide operating current range. The maximum initial tolerance is ±5 mV in the LP package and ±10 mV in the D and PW packages. The reference tolerance is achieved by on-chip trimming, which minimizes the initial voltage tolerance and the temperature coefficient, α_{VZ}.

Although the LT1009 needs no adjustments, a third terminal (ADJ) allows the reference voltage to be adjusted ±5% to eliminate system errors. In many applications, the LT1009 can be used as a terminal-for-terminal replacement for the LM136-2.5, which eliminates the external trim network.

The LT1009 uses include 5-V system references, 8-bit analog-to-digital converter (ADC) and digital-to-analog converter (DAC) references, and power-supply monitors. The device also can be used in applications such as digital voltmeters and current-loop measurement and control systems.

The LT1009C is characterized for operation from 0°C to 70°C. The LT1009I is characterized for operation from –40°C to 85°C.

SYMBOL

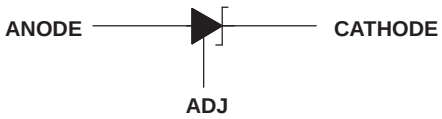

Please be aware that an important notice concerning availability, standard warranty, and use in critical applications of Texas Instruments semiconductor products and disclaimers thereto appears at the end of this data sheet.

PRODUCTION DATA information is current as of publication date. Products conform to specifications per the terms of the Texas Instruments standard warranty. Production processing does not necessarily include testing of all parameters.

Copyright © 1987–2009, Texas Instruments Incorporated

ORDERING INFORMATION(1)

T_A	PACKAGE(2)		ORDERABLE PART NUMBER	TOP-SIDE MARKING
0°C to 70°C	SOIC – D	Tube of 75	LT1009CD	1009C
		Reel of 2500	LT1009CDR	
	TO-226/TO-92 – LP	Bulk of 1000	LT1009CLP	LT1009C
		Ammo of 2000	LT1009CLPM	
		Reel of 2000	LT1009CLPR	
	TSSOP – PW	Tube of 150	LT1009CPW	1009C
		Reel of 2000	LT1009CPWR	
–40°C to 85°C	SOIC – D	Tube of 75	LT1009ID	1009I
		Reel of 2500	LT1009IDR	
	TO-226/TO-92 – LP	Bulk of 1000	LT1009ILP	LT1009I
		Ammo of 2000	LT1009ILPM	
		Reel of 2000	LT1009ILPR	
	TSSOP – PW	Tube of 150	LT1009IPW	1009I
		Reel of 2000	LT1009IPWR	

(1) For the most current package and ordering information, see the Package Option Addendum at the end of this document, or see the TI web site at www.ti.com.
(2) Package drawings, thermal data, and symbolization are available at www.ti.com/packaging.

SCHEMATIC

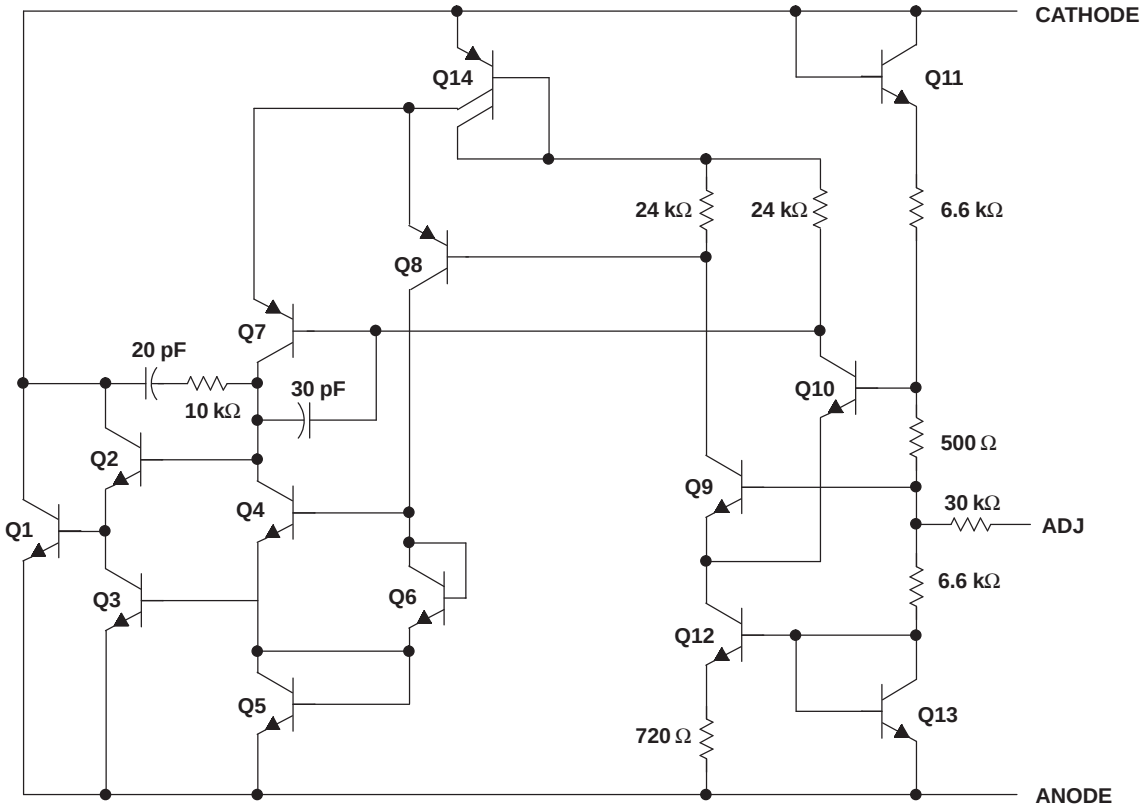

NOTE: All component values shown are nominal.

Copyright © 1987–2009, Texas Instruments Incorporated

ABSOLUTE MAXIMUM RATINGS[1]

over operating free-air temperature range (unless otherwise noted)

			MIN	MAX	UNIT
I_R	Reverse current			20	mA
I_F	Forward current			10	mA
θ_{JA}	Package thermal impedance[2][3]	D package		97	°C/W
		LP package		140	
		PW package		149	
T_J	Operating virtual junction temperature			150	°C
T_{stg}	Storage temperature range		–65	150	°C

(1) Stresses beyond those listed under "absolute maximum ratings" may cause permanent damage to the device. These are stress ratings only, and functional operation of the device at these or any other conditions beyond those indicated under "recommended operating conditions" is not implied. Exposure to absolute-maximum-rated conditions for extended periods may affect device reliability.
(2) Maximum power dissipation is a function of $T_J(max)$, θ_{JA}, and T_A. The maximum allowable power dissipation at any allowable ambient temperature is $P_D = (T_J(max) – T_A)/\theta_{JA}$. Operating at the absolute maximum T_J of 150°C can affect reliability.
(3) The package thermal impedance is calculated in accordance with JESD 51-7.

RECOMMENDED OPERATING CONDITIONS

			MIN	MAX	UNIT
T_A	Operating free-air temperature range	LT1009C	0	70	°C
		LT1009I	–40	85	

ELECTRICAL CHARACTERISTICS

at specified free-air temperature

PARAMETER		TEST CONDITIONS		T_A (1)	LT1009C			LT1009I			UNIT
					MIN	TYP	MAX	MIN	TYP	MAX	
V_Z	Reference voltage	I_Z = 1 mA	D/PW package	25°C	2.49	2.5	2.51	2.49	2.5	2.51	V
			LP package		2.495	2.5	2.505	2.495	2.5	2.505	
			D/PW package	Full range	2.485		2.515	2.475		2.525	
			LP package		2.491		2.509	2.48		2.52	
V_F	Forward voltage	I_F = 2 mA		25°C	0.4		1	0.4		1	V
	Adjustment range	I_Z = 1 mA, V_{ADJ} = GND to V_Z		25°C	125			125			mV
		I_Z = 1 mA, V_{ADJ} = 0.6 V to V_Z – 0.6 V			45			45			
$\Delta V_{Z(temp)}$	Change in reference voltage with temperature	D/PW package		Full range			5			15	mV
		LP package					4			15	
αV_Z	Average temperature coefficient of reference voltage (2)	I_Z = 1 mA, V_{ADJ} = open		0°C to 70°C		15	25		15	25	ppm/°C
				–40°C to 85°C					20	35	
ΔV_Z	Change in reference voltage with current	I_Z = 400 µA to 10 mA		25°C		2.6	10		2.6	6	mV
				Full range			12			10	
$\Delta V_Z/\Delta t$	Long-term change in reference voltage	I_Z = 1 mA		25°C		20			20		ppm/khr
Z_Z	Reference impedance	I_Z = 1 mA		25°C		0.3	1		0.3	1	Ω
				Full range			1.4			1.4	

(1) Full range is 0°C to 70°C for the LT1009C and –40°C to 85°C for the LT1009I.

(2) The deviation parameter $V_{Z(dev)}$ is defined as the difference between the maximum and minimum values obtained over the recommended operating temperature range, measured at I_Z = 1 mA. The average full-range temperature coefficient of the reference voltage (αV_Z) is defined as:

$$|\alpha V_z| \left(\frac{ppm}{°C}\right) = \frac{\left(\frac{V_{Z(dev)}}{V_Z \text{ at } 25°C}\right) \times 10^6}{\Delta T_A}$$

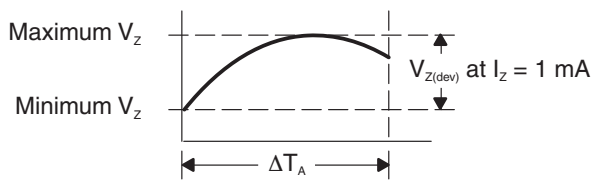

αV_Z can be positive or negative, depending upon whether the minimum V_Z or maximum V_Z, respectively, occurs at the lower temperature.

For example, at I_Z = 1 mA, maximum V_Z = 2501 mV at 30°C, minimum V_Z = 2497 mV at 0°C, V_Z = 2500 mV at 25°C, ΔT_A = 70°C for LT1009C:

$$|\alpha V_z| = \frac{\left(\frac{4 \text{ mV}}{2500 \text{ mV}}\right) \times 10^6}{70°C} \approx 23 \frac{ppm}{°C}$$

Because minimum V_Z occurs at the lower temperature, the coefficient in this example is positive.

Copyright © 1987–2009, Texas Instruments Incorporated

TYPICAL CHARACTERISTICS

Data at high and low temperatures are applicable only within the rated operating free-air temperature ranges of the various devices.

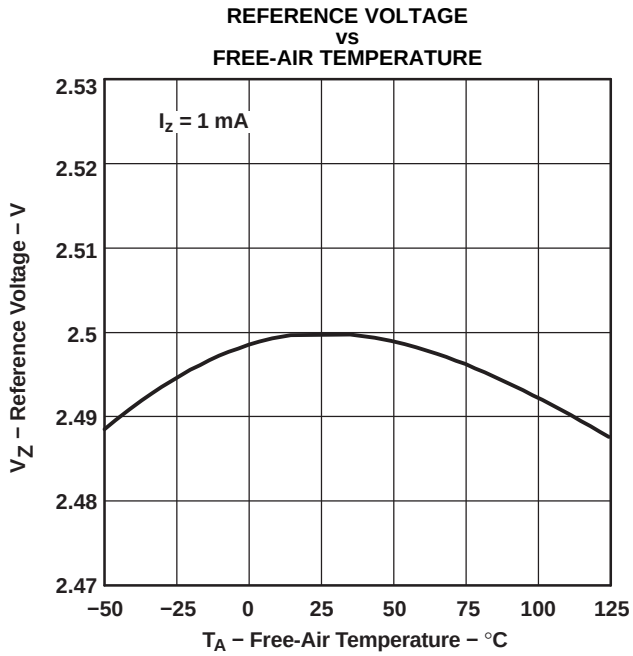

Figure 1.

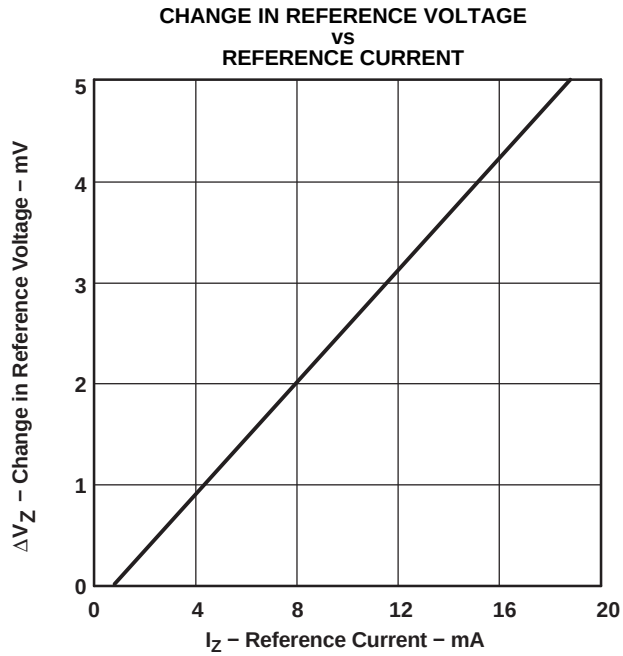

Figure 2.

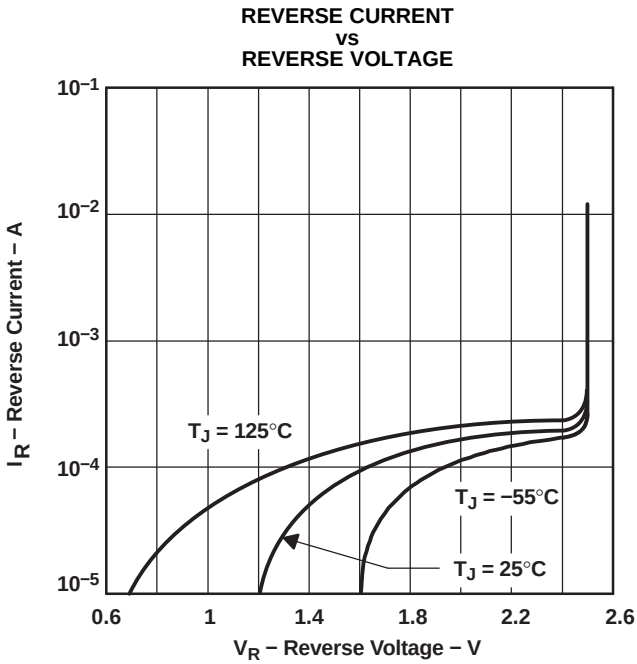

Figure 3.

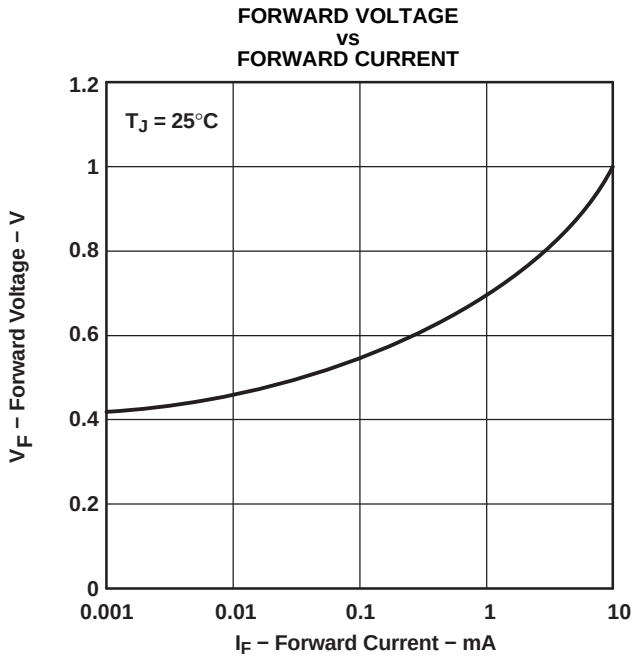

Figure 4.

TYPICAL CHARACTERISTICS (continued)

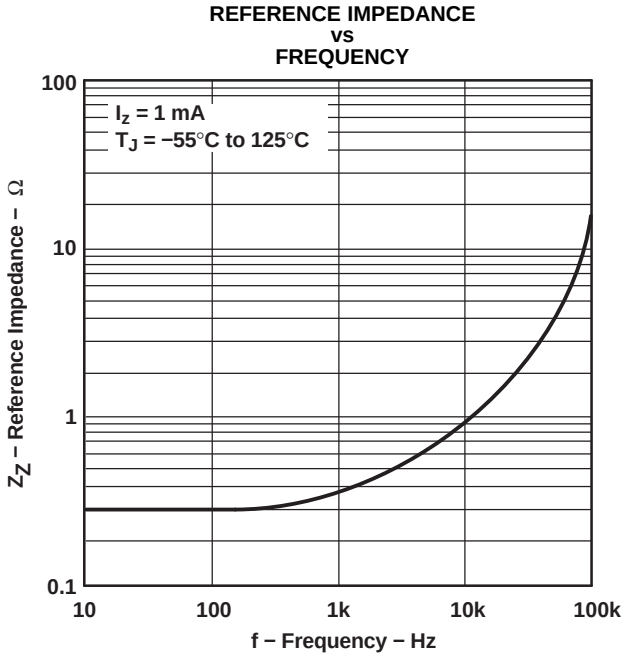

Figure 5.

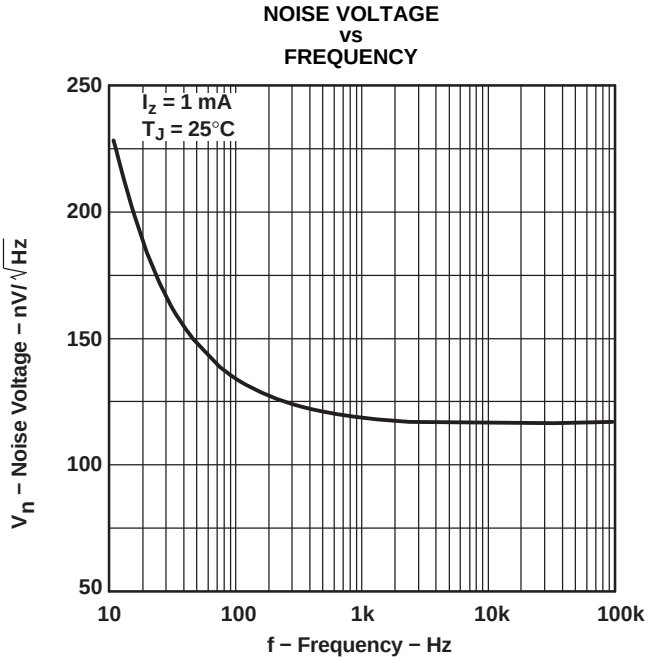

Figure 6.

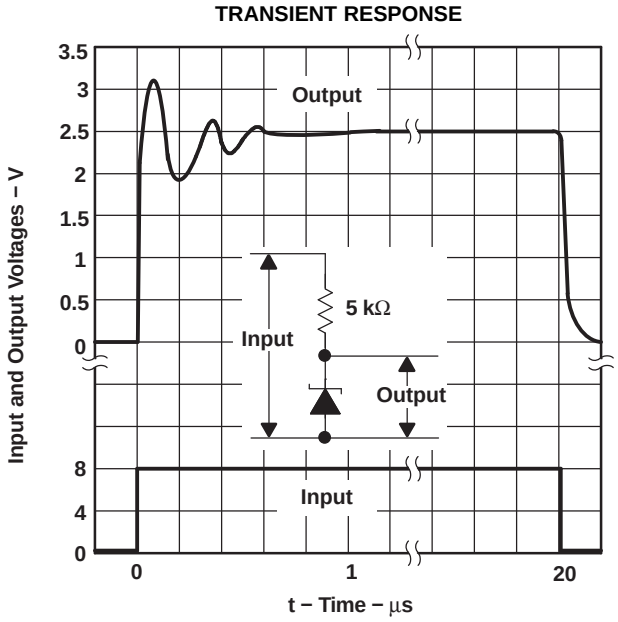

Figure 7.

Copyright © 1987–2009, Texas Instruments Incorporated

APPLICATION INFORMATION

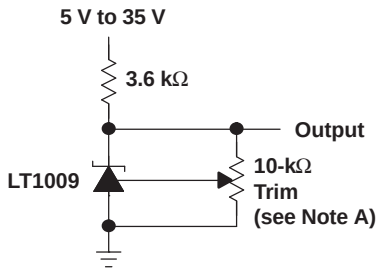

A. This does not affect temperature coefficient. It provides ±5% trim range.

Figure 8. 2.5-V Reference

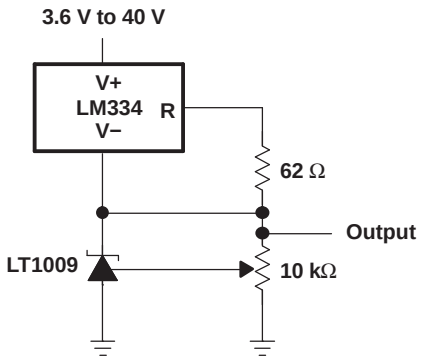

Figure 9. Adjustable Reference With Wide Supply Range

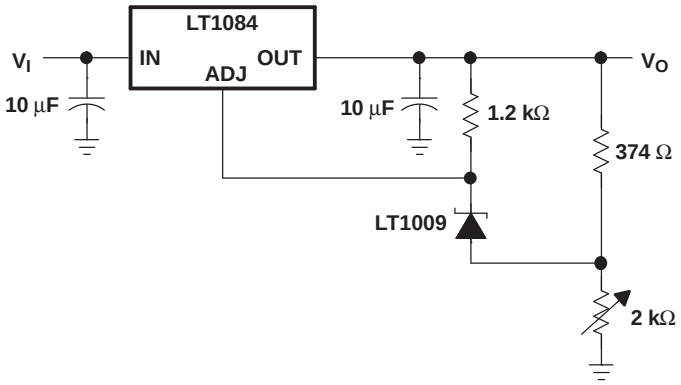

Figure 10. Power Regulator With Low Temperature Coefficient

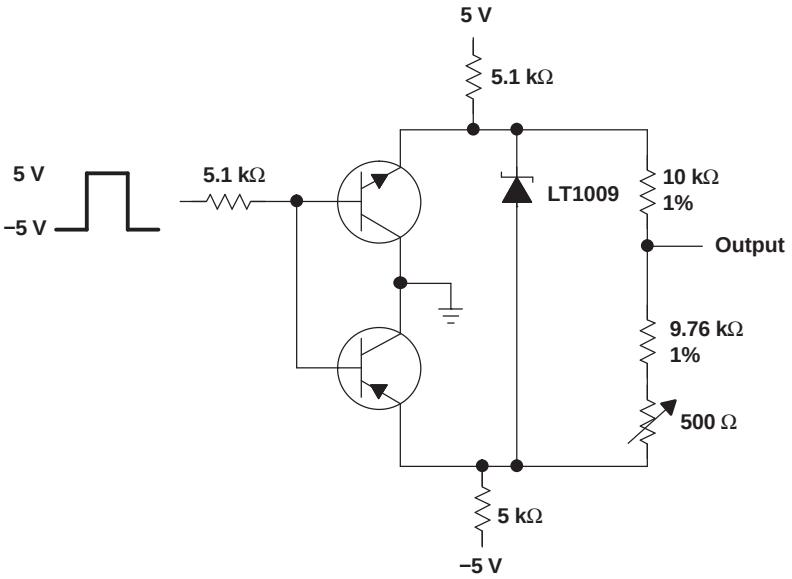

Figure 11. Switchable ±1.25-V Bipolar Reference

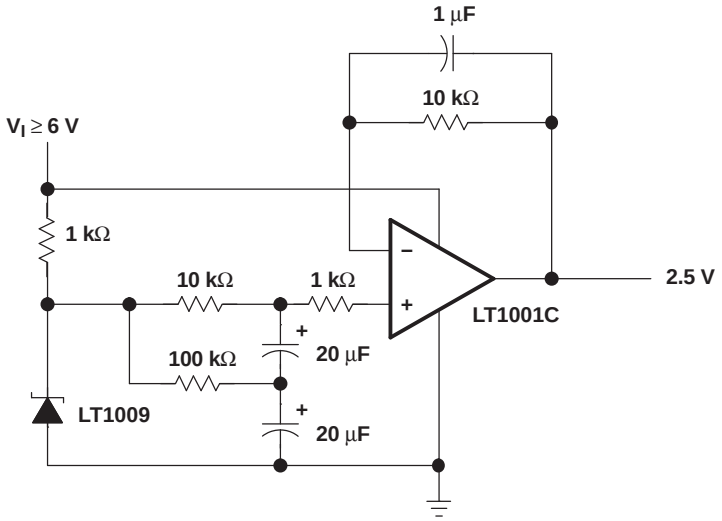

Figure 12. Low-Noise 2.5-V Buffered Reference

Copyright © 1987–2009, Texas Instruments Incorporated

PACKAGING INFORMATION

Orderable Device	Status (1)	Package Type	Package Drawing	Pins	Package Qty	Eco Plan (2)	Lead/ Ball Finish	MSL Peak Temp (3)	Samples (Requires Login)
LT1009CD	ACTIVE	SOIC	D	8	75	Green (RoHS & no Sb/Br)	CU NIPDAU	Level-1-260C-UNLIM	Add to cart
LT1009CDE4	ACTIVE	SOIC	D	8	75	Green (RoHS & no Sb/Br)	CU NIPDAU	Level-1-260C-UNLIM	Add to cart
LT1009CDG4	ACTIVE	SOIC	D	8	75	Green (RoHS & no Sb/Br)	CU NIPDAU	Level-1-260C-UNLIM	Add to cart
LT1009CDR	ACTIVE	SOIC	D	8	2500	Green (RoHS & no Sb/Br)	CU NIPDAU	Level-1-260C-UNLIM	Add to cart
LT1009CDRE4	ACTIVE	SOIC	D	8	2500	Green (RoHS & no Sb/Br)	CU NIPDAU	Level-1-260C-UNLIM	Add to cart
LT1009CDRG4	ACTIVE	SOIC	D	8	2500	Green (RoHS & no Sb/Br)	CU NIPDAU	Level-1-260C-UNLIM	Add to cart
LT1009CLP	ACTIVE	TO-92	LP	3	1000	Pb-Free (RoHS)	CU SN	N / A for Pkg Type	Add to cart
LT1009CLPE3	ACTIVE	TO-92	LP	3	1000	Pb-Free (RoHS)	CU SN	N / A for Pkg Type	Add to cart
LT1009CLPM	ACTIVE	TO-92	LP	3	2000	Pb-Free (RoHS)	CU SN	N / A for Pkg Type	Add to cart
LT1009CLPME3	ACTIVE	TO-92	LP	3	2000	Pb-Free (RoHS)	CU SN	N / A for Pkg Type	Add to cart
LT1009CLPR	ACTIVE	TO-92	LP	3	2000	Pb-Free (RoHS)	CU SN	N / A for Pkg Type	Add to cart
LT1009CLPRE3	ACTIVE	TO-92	LP	3	2000	Pb-Free (RoHS)	CU SN	N / A for Pkg Type	Add to cart
LT1009CPK	OBSOLETE	SOT-89	PK	3		TBD	Call TI	Call TI	Add to cart
LT1009CPWR	ACTIVE	TSSOP	PW	8	2000	Green (RoHS & no Sb/Br)	CU NIPDAU	Level-1-260C-UNLIM	Add to cart
LT1009CPWRE4	ACTIVE	TSSOP	PW	8	2000	Green (RoHS & no Sb/Br)	CU NIPDAU	Level-1-260C-UNLIM	Add to cart
LT1009CPWRG4	ACTIVE	TSSOP	PW	8	2000	Green (RoHS & no Sb/Br)	CU NIPDAU	Level-1-260C-UNLIM	Add to cart
LT1009ID	ACTIVE	SOIC	D	8	75	Green (RoHS & no Sb/Br)	CU NIPDAU	Level-1-260C-UNLIM	Add to cart
LT1009IDE4	ACTIVE	SOIC	D	8	75	Green (RoHS & no Sb/Br)	CU NIPDAU	Level-1-260C-UNLIM	Add to cart
LT1009IDG4	ACTIVE	SOIC	D	8	75	Green (RoHS & no Sb/Br)	CU NIPDAU	Level-1-260C-UNLIM	Add to cart
LT1009IDR	ACTIVE	SOIC	D	8	2500	Green (RoHS & no Sb/Br)	CU NIPDAU	Level-1-260C-UNLIM	Add to cart

Orderable Device	Status (1)	Package Type	Package Drawing	Pins	Package Qty	Eco Plan (2)	Lead/ Ball Finish	MSL Peak Temp (3)	Samples (Requires Login)
LT1009IDRE4	ACTIVE	SOIC	D	8	2500	Green (RoHS & no Sb/Br)	CU NIPDAU	Level-1-260C-UNLIM	Add to cart
LT1009IDRG4	ACTIVE	SOIC	D	8	2500	Green (RoHS & no Sb/Br)	CU NIPDAU	Level-1-260C-UNLIM	Add to cart
LT1009ILP	ACTIVE	TO-92	LP	3	1000	Pb-Free (RoHS)	CU SN	N / A for Pkg Type	Add to cart
LT1009ILPE3	ACTIVE	TO-92	LP	3	1000	Pb-Free (RoHS)	CU SN	N / A for Pkg Type	Add to cart
LT1009ILPR	ACTIVE	TO-92	LP	3	2000	Pb-Free (RoHS)	CU SN	N / A for Pkg Type	Add to cart
LT1009ILPRE3	ACTIVE	TO-92	LP	3	2000	Pb-Free (RoHS)	CU SN	N / A for Pkg Type	Add to cart
LT1009IPWR	ACTIVE	TSSOP	PW	8	2000	Green (RoHS & no Sb/Br)	CU NIPDAU	Level-1-260C-UNLIM	Add to cart
LT1009IPWRE4	ACTIVE	TSSOP	PW	8	2000	Green (RoHS & no Sb/Br)	CU NIPDAU	Level-1-260C-UNLIM	Add to cart
LT1009IPWRG4	ACTIVE	TSSOP	PW	8	2000	Green (RoHS & no Sb/Br)	CU NIPDAU	Level-1-260C-UNLIM	Add to cart
LT1009QDR	OBSOLETE	SOIC	D	8		TBD	Call TI	Call TI	Add to cart
LT1009Y	OBSOLETE	DIESALE	Y	0		TBD	Call TI	Call TI	Add to cart

(1) The marketing status values are defined as follows:
ACTIVE: Product device recommended for new designs.
LIFEBUY: TI has announced that the device will be discontinued, and a lifetime-buy period is in effect.
NRND: Not recommended for new designs. Device is in production to support existing customers, but TI does not recommend using this part in a new design.
PREVIEW: Device has been announced but is not in production. Samples may or may not be available.
OBSOLETE: TI has discontinued the production of the device.

(2) Eco Plan - The planned eco-friendly classification: Pb-Free (RoHS), Pb-Free (RoHS Exempt), or Green (RoHS & no Sb/Br) - please check http://www.ti.com/productcontent for the latest availability information and additional product content details.
TBD: The Pb-Free/Green conversion plan has not been defined.
Pb-Free (RoHS): TI's terms "Lead-Free" or "Pb-Free" mean semiconductor products that are compatible with the current RoHS requirements for all 6 substances, including the requirement that lead not exceed 0.1% by weight in homogeneous materials. Where designed to be soldered at high temperatures, TI Pb-Free products are suitable for use in specified lead-free processes.
Pb-Free (RoHS Exempt): This component has a RoHS exemption for either 1) lead-based flip-chip solder bumps used between the die and package, or 2) lead-based die adhesive used between the die and leadframe. The component is otherwise considered Pb-Free (RoHS compatible) as defined above.
Green (RoHS & no Sb/Br): TI defines "Green" to mean Pb-Free (RoHS compatible), and free of Bromine (Br) and Antimony (Sb) based flame retardants (Br or Sb do not exceed 0.1% by weight in homogeneous material)

(3) MSL, Peak Temp. -- The Moisture Sensitivity Level rating according to the JEDEC industry standard classifications, and peak solder temperature.

Important Information and Disclaimer: The information provided on this page represents TI's knowledge and belief as of the date that it is provided. TI bases its knowledge and belief on information provided by third parties, and makes no representation or warranty as to the accuracy of such information. Efforts are underway to better integrate information from third parties. TI has taken and continues to take reasonable steps to provide representative and accurate information but may not have conducted destructive testing or chemical analysis on incoming materials and chemicals. TI and TI suppliers consider certain information to be proprietary, and thus CAS numbers and other limited information may not be available for release.

In no event shall TI's liability arising out of such information exceed the total purchase price of the TI part(s) at issue in this document sold by TI to Customer on an annual basis.

OTHER QUALIFIED VERSIONS OF LT1009 :

- Military: LT1009M

NOTE: Qualified Version Definitions:

- Military - QML certified for Military and Defense Applications

TAPE AND REEL INFORMATION

REEL DIMENSIONS

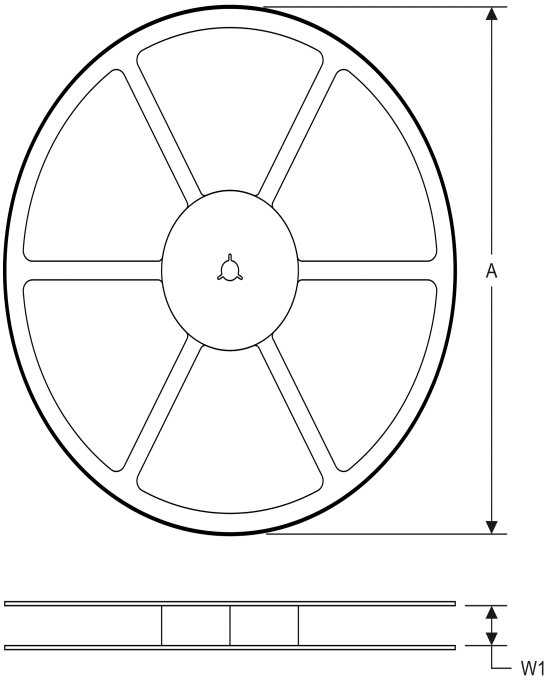

TAPE DIMENSIONS

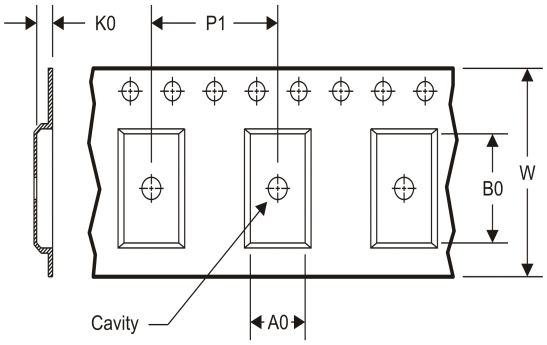

A0	Dimension designed to accommodate the component width
B0	Dimension designed to accommodate the component length
K0	Dimension designed to accommodate the component thickness
W	Overall width of the carrier tape
P1	Pitch between successive cavity centers

TAPE AND REEL INFORMATION

*All dimensions are nominal

Device	Package Type	Package Drawing	Pins	SPQ	Reel Diameter (mm)	Reel Width W1 (mm)	A0 (mm)	B0 (mm)	K0 (mm)	P1 (mm)	W (mm)	Pin1 Quadrant
LT1009CDR	SOIC	D	8	2500	330.0	12.4	6.4	5.2	2.1	8.0	12.0	Q1
LT1009CPWR	TSSOP	PW	8	2000	330.0	12.4	7.0	3.6	1.6	8.0	12.0	Q1
LT1009IDR	SOIC	D	8	2500	330.0	12.4	6.4	5.2	2.1	8.0	12.0	Q1
LT1009IPWR	TSSOP	PW	8	2000	330.0	12.4	7.0	3.6	1.6	8.0	12.0	Q1

TAPE AND REEL BOX DIMENSIONS

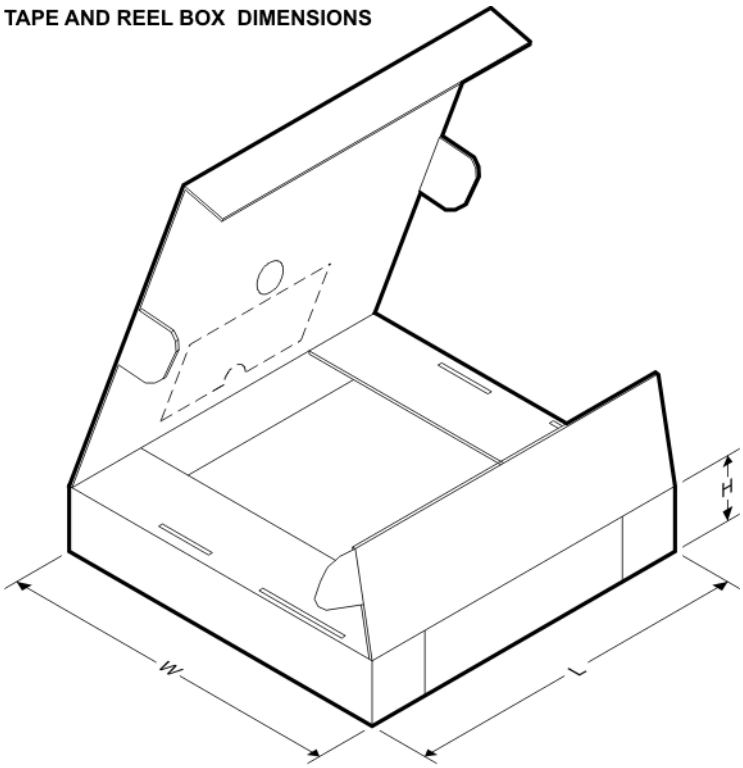

*All dimensions are nominal

Device	Package Type	Package Drawing	Pins	SPQ	Length (mm)	Width (mm)	Height (mm)
LT1009CDR	SOIC	D	8	2500	340.5	338.1	20.6
LT1009CPWR	TSSOP	PW	8	2000	367.0	367.0	35.0
LT1009IDR	SOIC	D	8	2500	340.5	338.1	20.6
LT1009IPWR	TSSOP	PW	8	2000	367.0	367.0	35.0

PK (R–PSSO–F3) PLASTIC SINGLE–IN–LINE PACKAGE

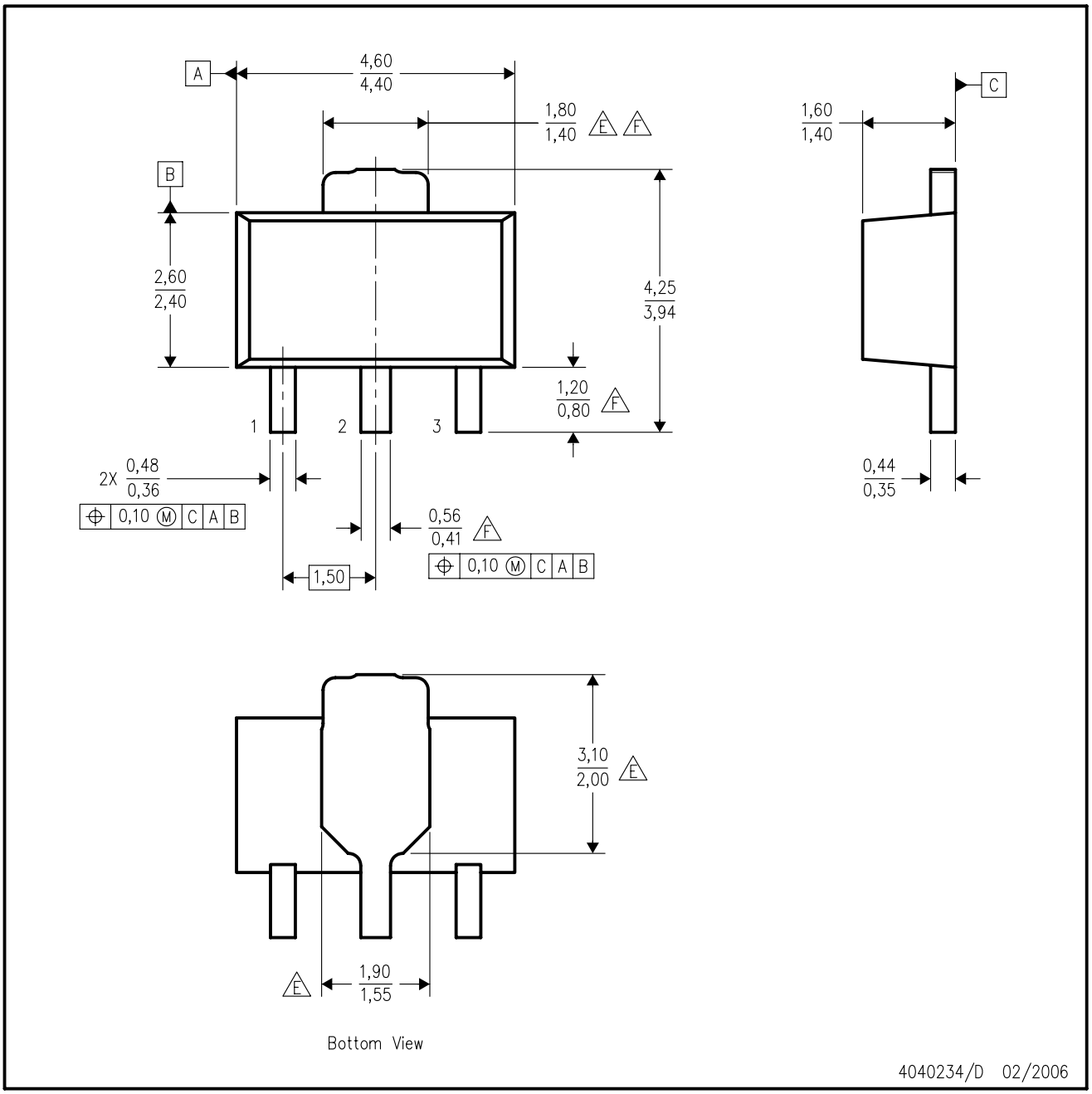

NOTES:
- A. All linear dimensions are in millimeters. Dimensioning and tolerancing per ASME Y14.5M–1994.
- B. This drawing is subject to change without notice.
- C. The center lead is in electrical contact with the tab.
- D. Body dimensions do not include mold flash or protrusion. Mold flash and protrusion not to exceed 0.15 per side.
- E. Thermal pad contour optional within these dimensions.
- F. Falls within JEDEC TO–243 variation AA, except minimum lead length, pin 2 minimum lead width, minimum tab width.

PW (R-PDSO-G28) PLASTIC SMALL OUTLINE

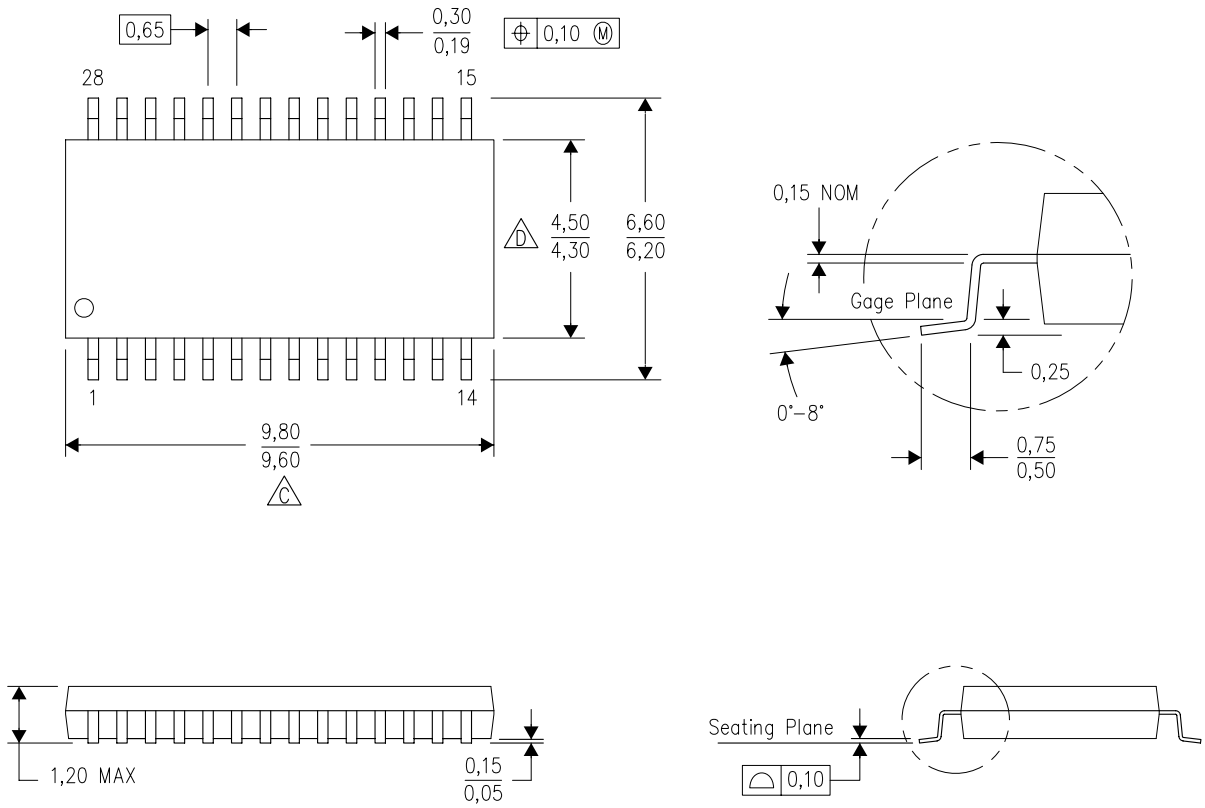

NOTES:
A. All linear dimensions are in millimeters. Dimensioning and tolerancing per ASME Y14.5M–1994.
B. This drawing is subject to change without notice.
C. Body length does not include mold flash, protrusions, or gate burrs. Mold flash, protrusions, or gate burrs shall not exceed 0,15 each side.
D. Body width does not include interlead flash. Interlead flash shall not exceed 0,25 each side.
E. Falls within JEDEC MO-153

D (R–PDSO–G8) PLASTIC SMALL OUTLINE

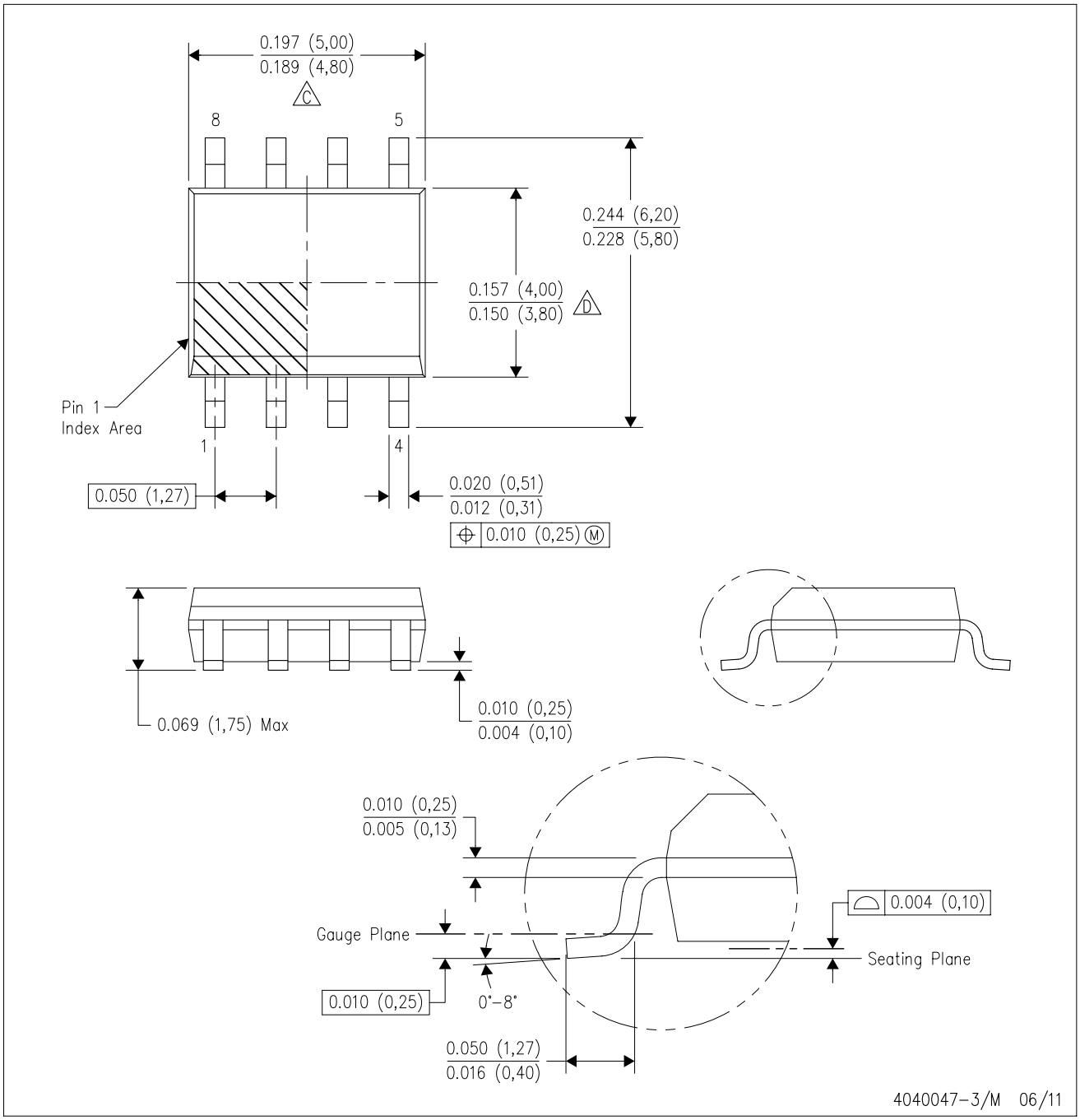

NOTES:
A. All linear dimensions are in inches (millimeters).
B. This drawing is subject to change without notice.
C. Body length does not include mold flash, protrusions, or gate burrs. Mold flash, protrusions, or gate burrs shall not exceed 0.006 (0,15) each side.
D. Body width does not include interlead flash. Interlead flash shall not exceed 0.017 (0,43) each side.
E. Reference JEDEC MS–012 variation AA.

D (R–PDSO–G8) PLASTIC SMALL OUTLINE

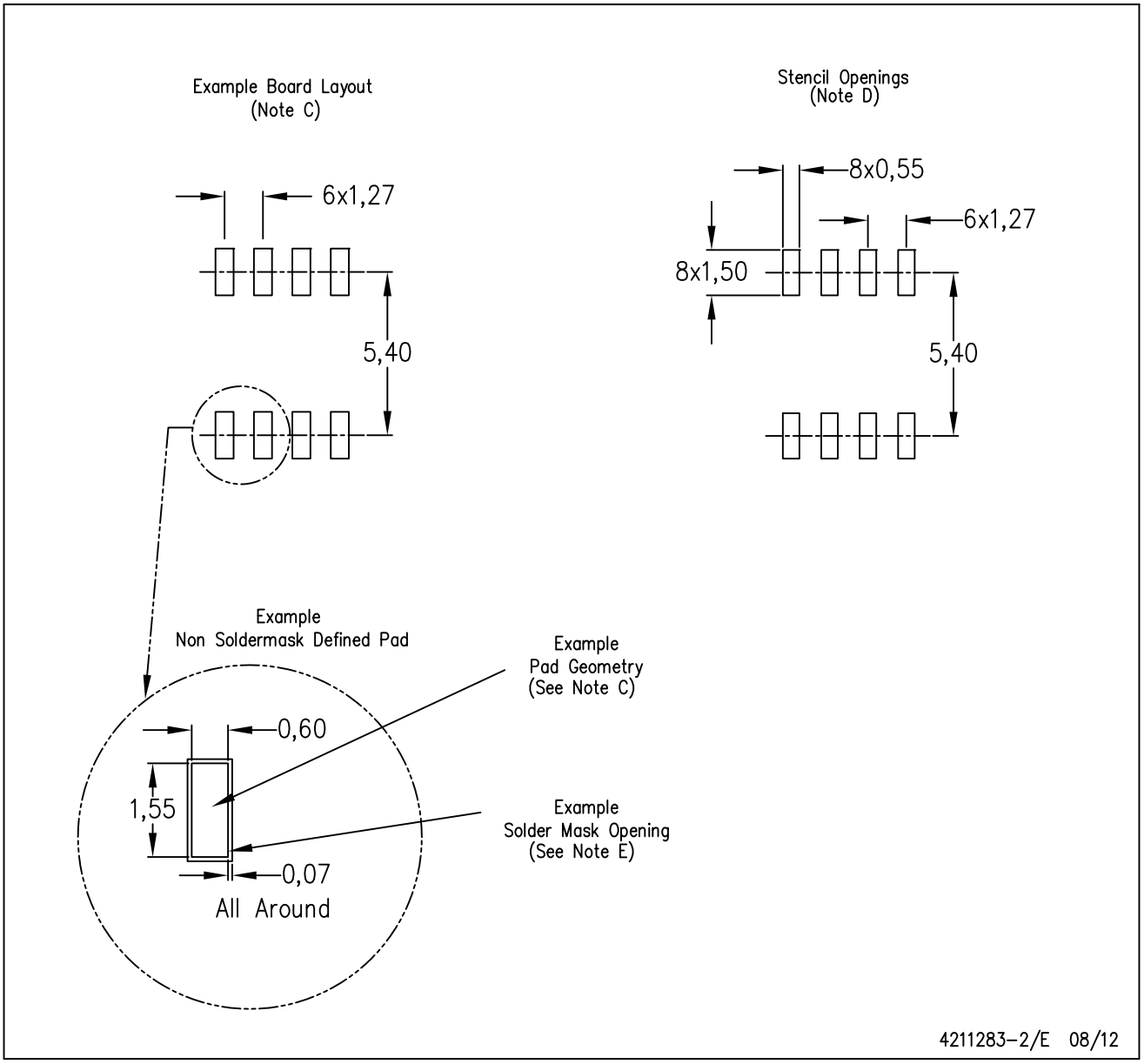

NOTES:
A. All linear dimensions are in millimeters.
B. This drawing is subject to change without notice.
C. Publication IPC–7351 is recommended for alternate designs.
D. Laser cutting apertures with trapezoidal walls and also rounding corners will offer better paste release. Customers should contact their board assembly site for stencil design recommendations. Refer to IPC–7525 for other stencil recommendations.
E. Customers should contact their board fabrication site for solder mask tolerances between and around signal pads.

LP (O-PBCY-W3) **PLASTIC CYLINDRICAL PACKAGE**

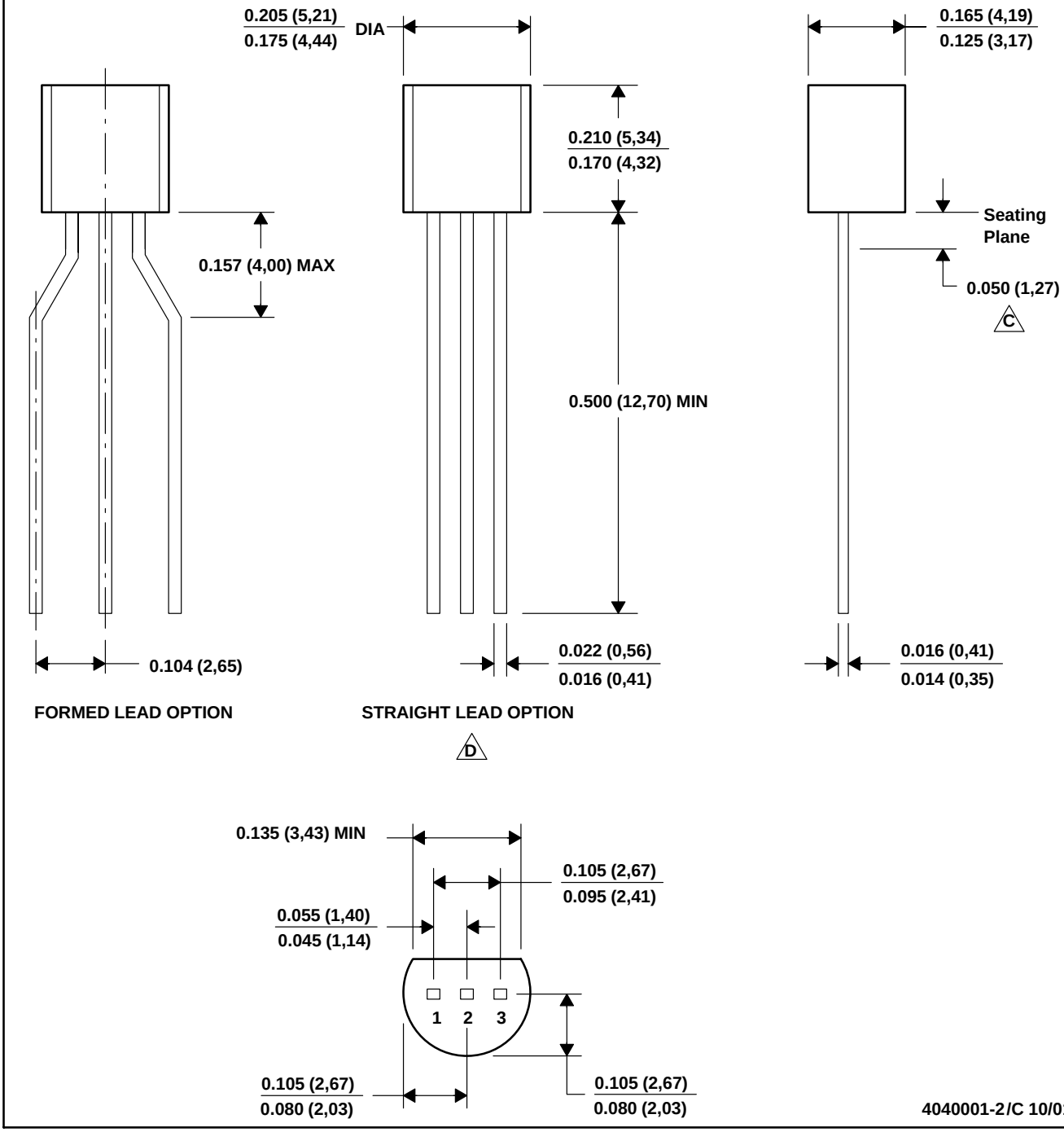

NOTES: A. All linear dimensions are in inches (millimeters).
B. This drawing is subject to change without notice.
C. Lead dimensions are not controlled within this area
D. FAlls within JEDEC TO -226 Variation AA (TO-226 replaces TO-92)
E. Shipping Method:
Straight lead option available in bulk pack only.
Formed lead option available in tape & reel or ammo pack.

LP (O-PBCY-W3) **PLASTIC CYLINDRICAL PACKAGE**

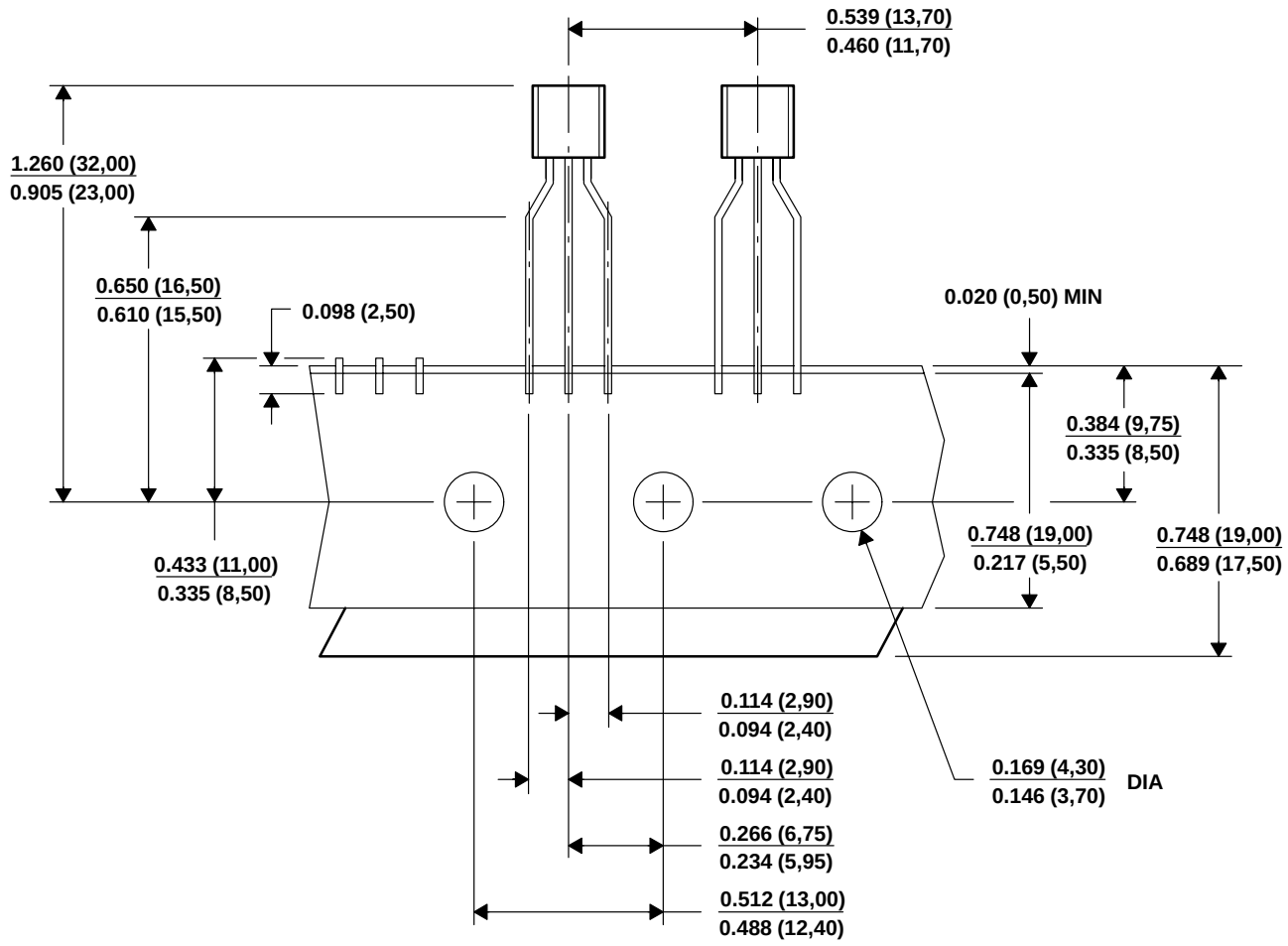

NOTES: A. All linear dimensions are in inches (millimeters).
B. This drawing is subject to change without notice.
C. Tape and Reel information for the Format Lead Option package.

PW (R-PDSO-G8) PLASTIC SMALL OUTLINE

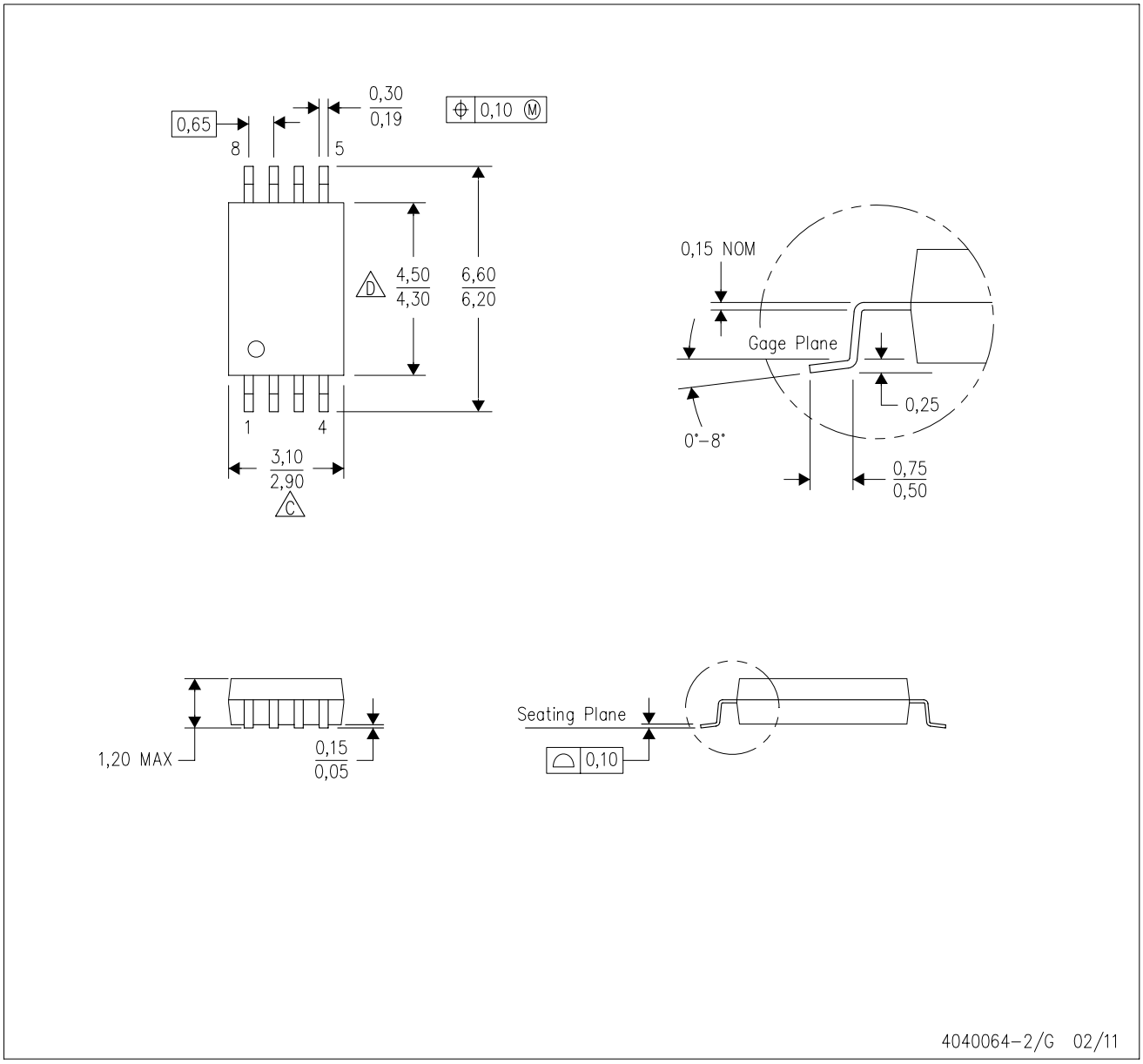

NOTES:
A. All linear dimensions are in millimeters. Dimensioning and tolerancing per ASME Y14.5M-1994.
B. This drawing is subject to change without notice.
C. Body length does not include mold flash, protrusions, or gate burrs. Mold flash, protrusions, or gate burrs shall not exceed 0,15 each side.
D. Body width does not include interlead flash. Interlead flash shall not exceed 0,25 each side.
E. Falls within JEDEC MO-153

IMPORTANT NOTICE

Texas Instruments Incorporated and its subsidiaries (TI) reserve the right to make corrections, enhancements, improvements and other changes to its semiconductor products and services per JESD46, latest issue, and to discontinue any product or service per JESD48, latest issue. Buyers should obtain the latest relevant information before placing orders and should verify that such information is current and complete. All semiconductor products (also referred to herein as “components”) are sold subject to TI’s terms and conditions of sale supplied at the time of order acknowledgment.

TI warrants performance of its components to the specifications applicable at the time of sale, in accordance with the warranty in TI’s terms and conditions of sale of semiconductor products. Testing and other quality control techniques are used to the extent TI deems necessary to support this warranty. Except where mandated by applicable law, testing of all parameters of each component is not necessarily performed.

TI assumes no liability for applications assistance or the design of Buyers’ products. Buyers are responsible for their products and applications using TI components. To minimize the risks associated with Buyers’ products and applications, Buyers should provide adequate design and operating safeguards.

TI does not warrant or represent that any license, either express or implied, is granted under any patent right, copyright, mask work right, or other intellectual property right relating to any combination, machine, or process in which TI components or services are used. Information published by TI regarding third-party products or services does not constitute a license to use such products or services or a warranty or endorsement thereof. Use of such information may require a license from a third party under the patents or other intellectual property of the third party, or a license from TI under the patents or other intellectual property of TI.

Reproduction of significant portions of TI information in TI data books or data sheets is permissible only if reproduction is without alteration and is accompanied by all associated warranties, conditions, limitations, and notices. TI is not responsible or liable for such altered documentation. Information of third parties may be subject to additional restrictions.

Resale of TI components or services with statements different from or beyond the parameters stated by TI for that component or service voids all express and any implied warranties for the associated TI component or service and is an unfair and deceptive business practice. TI is not responsible or liable for any such statements.

Buyer acknowledges and agrees that it is solely responsible for compliance with all legal, regulatory and safety-related requirements concerning its products, and any use of TI components in its applications, notwithstanding any applications-related information or support that may be provided by TI. Buyer represents and agrees that it has all the necessary expertise to create and implement safeguards which anticipate dangerous consequences of failures, monitor failures and their consequences, lessen the likelihood of failures that might cause harm and take appropriate remedial actions. Buyer will fully indemnify TI and its representatives against any damages arising out of the use of any TI components in safety-critical applications.

In some cases, TI components may be promoted specifically to facilitate safety-related applications. With such components, TI’s goal is to help enable customers to design and create their own end-product solutions that meet applicable functional safety standards and requirements. Nonetheless, such components are subject to these terms.

No TI components are authorized for use in FDA Class III (or similar life-critical medical equipment) unless authorized officers of the parties have executed a special agreement specifically governing such use.

Only those TI components which TI has specifically designated as military grade or “enhanced plastic” are designed and intended for use in military/aerospace applications or environments. Buyer acknowledges and agrees that any military or aerospace use of TI components which have ***not*** been so designated is solely at the Buyer's risk, and that Buyer is solely responsible for compliance with all legal and regulatory requirements in connection with such use.

TI has specifically designated certain components which meet ISO/TS16949 requirements, mainly for automotive use. Components which have not been so designated are neither designed nor intended for automotive use; and TI will not be responsible for any failure of such components to meet such requirements.

Products		**Applications**	
Audio	www.ti.com/audio	Automotive and Transportation	www.ti.com/automotive
Amplifiers	amplifier.ti.com	Communications and Telecom	www.ti.com/communications
Data Converters	dataconverter.ti.com	Computers and Peripherals	www.ti.com/computers
DLP® Products	www.dlp.com	Consumer Electronics	www.ti.com/consumer-apps
DSP	dsp.ti.com	Energy and Lighting	www.ti.com/energy
Clocks and Timers	www.ti.com/clocks	Industrial	www.ti.com/industrial
Interface	interface.ti.com	Medical	www.ti.com/medical
Logic	logic.ti.com	Security	www.ti.com/security
Power Mgmt	power.ti.com	Space, Avionics and Defense	www.ti.com/space-avionics-defense
Microcontrollers	microcontroller.ti.com	Video and Imaging	www.ti.com/video
RFID	www.ti-rfid.com		
OMAP Applications Processors	www.ti.com/omap	**TI E2E Community**	e2e.ti.com
Wireless Connectivity	www.ti.com/wirelessconnectivity		

Mailing Address: Texas Instruments, Post Office Box 655303, Dallas, Texas 75265
Copyright © 2012, Texas Instruments Incorporated