# 90% EFFICIENT SYNCHRONOUS BOOST CONVERTER WITH 600-mA SWITCH

## FEATURES

- **90% Efficient Synchronous Boost Converter**
  - **75-mA Output Current at 3.3 V From 0.9-V Input**
  - **150-mA Output Current at 3.3 V From 1.8-V Input**
- **Device Quiescent Current: 19 µA (Typ)**
- **Input Voltage Range: 0.9 V to 5.5 V**
- **Adjustable Output Voltage Up to 5.5 V**
- **Power-Save Mode Version Available for Improved Efficiency at Low Output Power**
- **Load Disconnect During Shutdown**
- **Overtemperature Protection**
- **Small 6-Pin Thin SOT23 Package**

## APPLICATIONS

- **All One-Cell, Two-Cell, and Three-Cell Alkaline, NiCd or NiMH or Single-Cell Li Battery-Powered Products**
- **Portable Audio Players**
- **PDAs**
- **Cellular Phones**
- **Personal Medical Products**
- **White LED Lighting**

## DESCRIPTION

The TPS6107x devices provide a power supply solution for products powered by either a one-cell, two-cell, or three-cell alkaline, NiCd or NiMH, or one-cell Li-ion or Li-polymer battery. Output currents can go as high as 75 mA while using a single-cell alkaline, and discharge it down to 0.9 V. It can also be used for generating 5 V at 200 mA from a 3.3 V rail or a Li-ion battery. The boost converter is based on a fixed frequency, pulse-width-modulation (PWM) controller using a synchronous rectifier to obtain maximum efficiency. At low load currents the TPS61070 and TPS61073 enter the power-save mode to maintain a high efficiency over a wide load current range. The power-save mode is disabled in the TPS61071 and TPS61072, forcing the converters to operate at a fixed switching frequency. The maximum peak current in the boost switch is typically limited to a value of 600 mA.

The TPS6107x output voltage is programmed by an external resistor divider. The converter can be disabled to minimize battery drain. During shutdown, the load is completely disconnected from the battery. The device is packaged in a 6-pin thin SOT23 package (DDC).

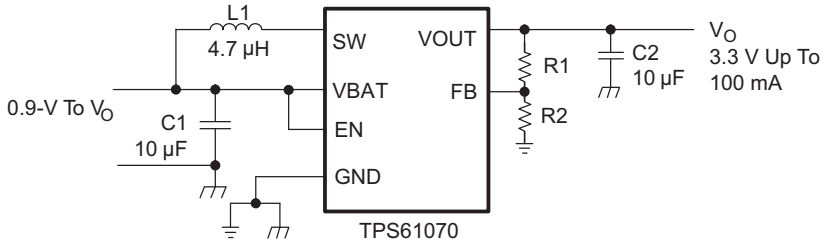


Please be aware that an important notice concerning availability, standard warranty, and use in critical applications of Texas Instruments semiconductor products and disclaimers thereto appears at the end of this data sheet.

PRODUCTION DATA information is current as of publication date. Products conform to specifications per the terms of the Texas Instruments standard warranty. Production processing does not necessarily include testing of all parameters.

Copyright © 2006–2007, Texas Instruments Incorporated

These devices have limited built-in ESD protection. The leads should be shorted together or the device placed in conductive foam during storage or handling to prevent electrostatic damage to the MOS gates.

## AVAILABLE OUTPUT VOLTAGE OPTIONS(1)

| $T_A$ | OUTPUT VOLTAGE DC/DC | POWER-SAVE MODE | OPERATING FREQUENCY | EN THRESHOLD REFERENCE VOLTAGE | PACKAGE MARKING | PACKAGE | PART NUMBER(2) |
|---|---|---|---|---|---|---|---|
| - 40°C to 85°C | Adjustable | Enabled | 1200 kHz | VBAT | AUH | 6-Pin TSOT23 | TPS61070DDC |
| | Adjustable | Disabled | 1200 kHz | VBAT | AUJ | | TPS61071DDC |
| | Adjustable | Disabled | 600 kHz | VBAT | BUM | | TPS61072DDC |
| | Adjustable | Enabled | 1200 kHz | 1.8 V Logic | BUN | | TPS61073DDC |

(1) For the most current package and ordering information, see the Package Option Addendum at the end of this document, or see the TI website at www.ti.com.
(2) The DDC package is available taped and reeled. Add R suffix to device type (e.g., TPS61070DDCR) to order quantities of 3000 devices per reel. Add T suffix to device type (e.g., TPS61070DDCT) to order quantities of 250 devices per reel.

## ABSOLUTE MAXIMUM RATINGS

over operating free-air temperature range (unless otherwise noted)(1)

| | TPS6107x |
|---|---|
| Input voltage range on SW, VOUT, VBAT, EN, FB | -0.3 V to 7 V |
| Operating virtual junction temperature range, $T_J$ | -40°C to 150°C |
| Storage temperature range $T_{stg}$ | -65°C to 150°C |

(1) Stresses beyond those listed under "absolute maximum ratings" may cause permanent damage to the device. These are stress ratings only, and functional operation of the device at these or any other conditions beyond those indicated under "recommended operating conditions" is not implied. Exposure to absolute-maximum-rated conditions for extended periods may affect device reliability.

## DISSIPATION RATINGS TABLE(1)

| PACKAGE | THERMAL RESISTANCE | | | POWER RATING $T_A \leq 25°C$ | DERATING FACTOR ABOVE $T_A = 25°C$ |
|---|---|---|---|---|---|
| | $\Theta_{JA}$ | $\Theta_{JB}$ | $\Theta_{JC}$ | | |
| DDC | 130 °C/W | 27 °C/W | 41 °C/W | 769 mW | 7.7 mW/°C |

(1) This thermal data is based on assembly of the device on a JEDEC high K board. Exceeding the maximum junction temperature will force the device into thermal shutdown.

## RECOMMENDED OPERATING CONDITIONS

| | MIN | NOM | MAX | UNIT |
|---|---|---|---|---|
| Supply voltage at VBAT, $V_I$ (TPS61070, TPS61071, TPS61072) | 0.9 | | 5.5 | V |
| Supply voltage at VBAT, $V_I$ (TPS61073) | 2.3 | | 5.5 | V |
| Operating free air temperature range, $T_A$ | -40 | | 85 | °C |
| Operating virtual junction temperature range, $T_J$ | -40 | | 125 | °C |

## ELECTRICAL CHARACTERISTICS

over recommended free-air temperature range and over recommended input voltage range (typical at an ambient temperature range of 25°C) (unless otherwise noted)

| DC/DC STAGE | | | | | | | |
|---|---|---|---|---|---|---|---|
| PARAMETER | | | TEST CONDITIONS | MIN | TYP | MAX | UNIT |
| $V_I$ | Minimum input voltage range for start-up (TPS61070, TPS61071, TPS61072) | | $R_L$ = 270 Ω | | 1.1 | 1.2 | V |
| | Minimum input voltage range for start-up (TPS61073) | | $R_L$ = 270 Ω | | | 2.3 | |
| | Input voltage range, after start-up (TPS61070, TPS61071, TPS61072) | | $T_A$ = 25°C | 0.9 | | 5.5 | |
| | Input voltage range, after start-up (TPS61073) | | | 2.3 | | 5.5 | |
| $V_O$ | Output voltage range (TPS61070, TPS61071, TPS61072) | | | 1.8 | | 5.5 | V |
| | Output voltage range (TPS61073) | | | 2.3 | | 5.5 | |
| $V_{(FB)}$ | Feedback voltage | | | 495 | 500 | 505 | mV |
| f | Oscillator frequency (TPS61070, TPS61071, TPS61073) | | | 960 | 1200 | 1440 | kHz |
| | Oscillator frequency (TPS61072) | | | 480 | 600 | 720 | |
| $I_{(SW)}$ | Switch current limit | | VOUT= 3.3 V | 500 | 600 | 700 | mA |
| | Start-up current limit | | | | 0.5 × $I_{SW}$ | | mA |
| | Boost switch-on resistance | | VOUT= 3.3 V | | 480 | | mΩ |
| | Rectifying switch-on resistance | | VOUT= 3.3 V | | 600 | | mΩ |
| | Total accuracy (including line and load regulation) | | | | | 3% | |
| | Line regulation | | | | | 1% | |
| | Load regulation | | | | | 1% | |
| | Quiescent current (TPS61070, TPS61071, TPS61072) | VBAT | $I_O$ = 0 mA, $V_{(EN)}$ = VBAT = 1.2 V, VOUT = 3.3 V, $T_A$ = 25°C | | 0.5 | 1 | µA |
| | | VOUT | | | 19 | 30 | µA |
| | Quiescent current (TPS61073) | VBAT | $I_O$ = 0 mA, $V_{(EN)}$ = 1.8 V, VBAT = 2.4 V, VOUT = 5 V, $T_A$ = 25°C | | 1 | 1.5 | µA |
| | | VOUT | | | 30 | 50 | µA |
| | Shutdown current (TPS61070, TPS61071, TPS61072) | | $V_{(EN)}$ = 0 V, VBAT = 1.2 V, $T_A$ = 25°C | | 0.05 | 0.5 | µA |
| | Shutdown current (TPS61073) | | $V_{(EN)}$ = 0 V, VBAT = 3.6 V, $T_A$ = 25°C | | 0.05 | 1.5 | µA |

| CONTROL STAGE | | | | | | |
|---|---|---|---|---|---|---|
| PARAMETER | | TEST CONDITIONS | MIN | TYP | MAX | UNIT |
| $V_{(UVLO)}$ | Undervoltage lockout threshold | $V_{(BAT)}$ voltage decreasing | | 0.8 | | V |
| $V_{IL}$ | EN input low voltage (TPS61070, TPS61071, TPS61072) | | | | 0.2 × VBAT | |
| | EN input low voltage (TPS61073) | | | | 0.4 | V |
| $V_{IH}$ | EN input high voltage (TPS61070, TPS61071, TPS61072) | | 0.8 × VBAT | | | |
| | EN input high voltage (TPS61073) | | 1.2 | | | V |
| | EN input current (TPS61070, TPS61071, TPS61072) | Clamped on GND or VBAT | | 0.01 | 0.1 | µA |
| | EN input current (TPS61073) | Clamped on GND or VBAT | | 0.01 | 0.3 | µA |
| | Overtemperature protection | | | 140 | | °C |
| | Overtemperature hysteresis | | | 20 | | °C |

## PIN ASSIGNMENTS

**DDC PACKAGE**
**TOP VIEW**

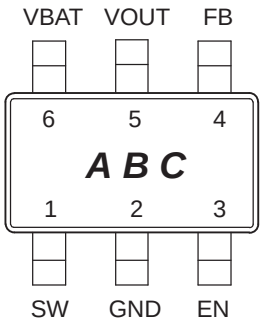


### Terminal Functions

| TERMINAL | | I/O | DESCRIPTION |
|---|---|---|---|
| NAME | NO. | | |
| EN | 3 | I | Enable input (1/VBAT enabled, 0/GND disabled) |
| FB | 4 | I | Voltage feedback for programming the output voltage |
| GND | 2 | | IC ground connection for logic and power |
| SW | 1 | I | Boost and rectifying switch input |
| VBAT | 6 | I | Supply voltage |
| VOUT | 5 | O | Boost converter output |

## FUNCTIONAL BLOCK DIAGRAM (TPS61070)

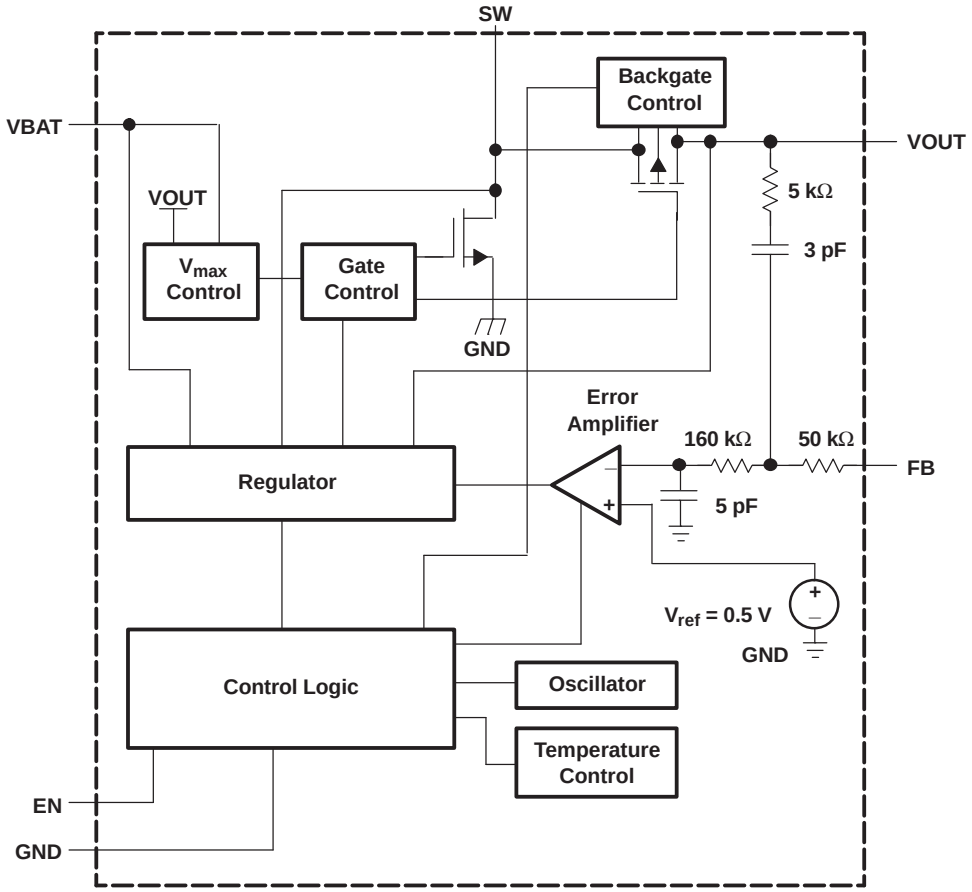


## Parameter Measurement Information

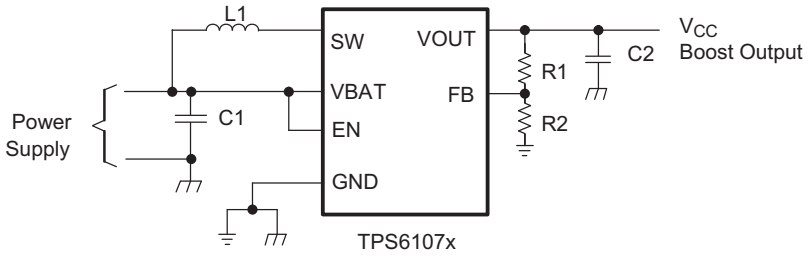


List of Components:
U1 = TPS61070DDC
L1 = 4.7 µH Wurth Elektronik 744031004
C1 = 2 x 4.7 µF, 0603, X7R/X5R Ceramic
C2 = 4 x 4.7 µF, 0603, X7R/X5R Ceramic

## TYPICAL CHARACTERISTICS

### Table of Graphs


| | | FIGURE |
|---|---|---|
| Maximum output current | vs Input voltage | 1 |
| Efficiency | vs Output current | 2 |
| | vs Output current | 3 |
| | vs Output current | 4 |
| | vs Input voltage | 5 |
| | vs Input voltage | 6 |
| Output voltage | vs Output current | 7 |
| | vs Output current | 8 |
| No load supply current into VOUT | vs Input voltage | 9 |
| Waveforms | Output voltage in continuous mode (TPS61071) | 10 |
| | Output voltage in continuous mode (TPS61071) | 11 |
| | Output voltage in power-save mode (TPS61070) | 12 |
| | Output voltage in power-save mode (TPS61070) | 13 |
| | Load transient response (TPS61071) | 14 |
| | Load transient response (TPS61071) | 15 |
| | Line transient response (TPS61071) | 16 |
| | Line transient response (TPS61071) | 17 |
| | Start-up after enable (TPS61070) | 18 |
| | Start-up after enable (TPS61070) | 19 |
| | Start-up after enable (TPS61071) | 20 |
| | Start-up after enable (TPS61071) | 21 |


## TYPICAL CHARACTERISTICS

**MAXIMUM OUTPUT CURRENT vs INPUT VOLTAGE**

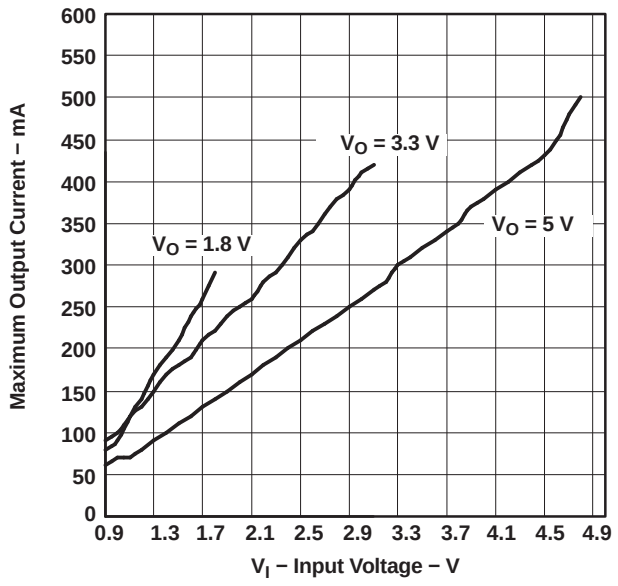


Figure 1.

**EFFICIENCY vs OUTPUT CURRENT**

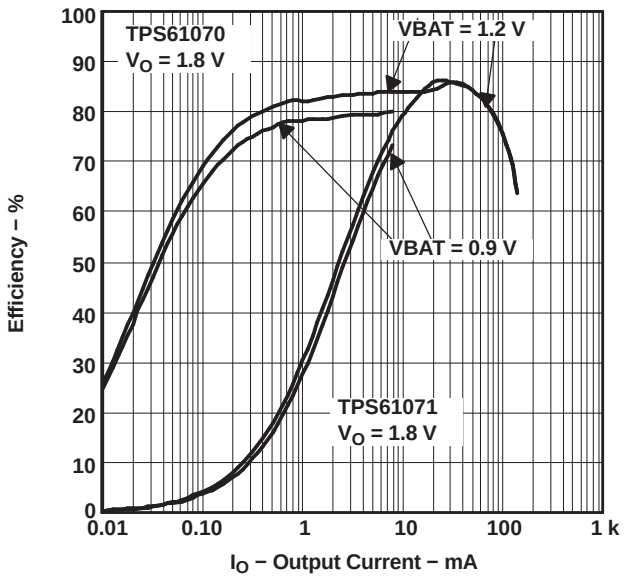


Figure 2.

## TYPICAL CHARACTERISTICS (continued)

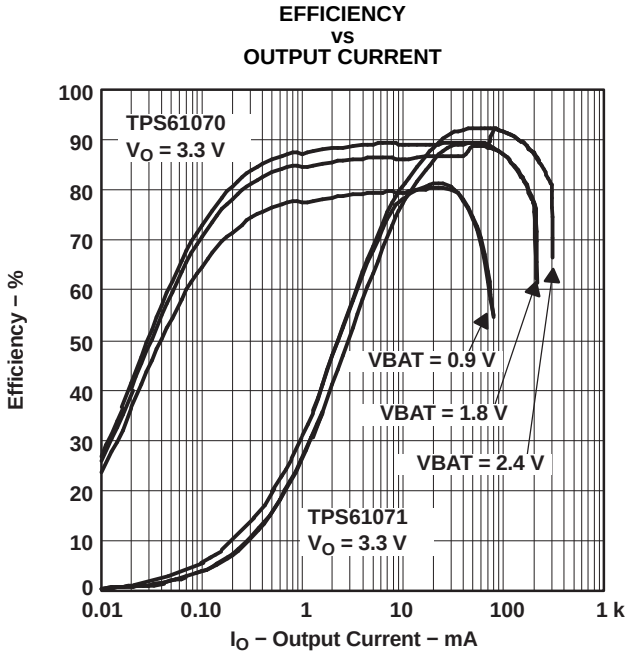


Figure 3.

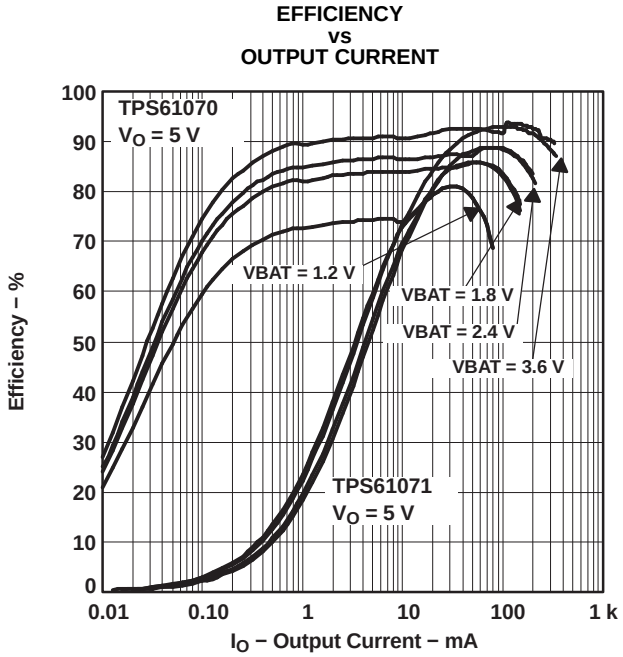


Figure 4.

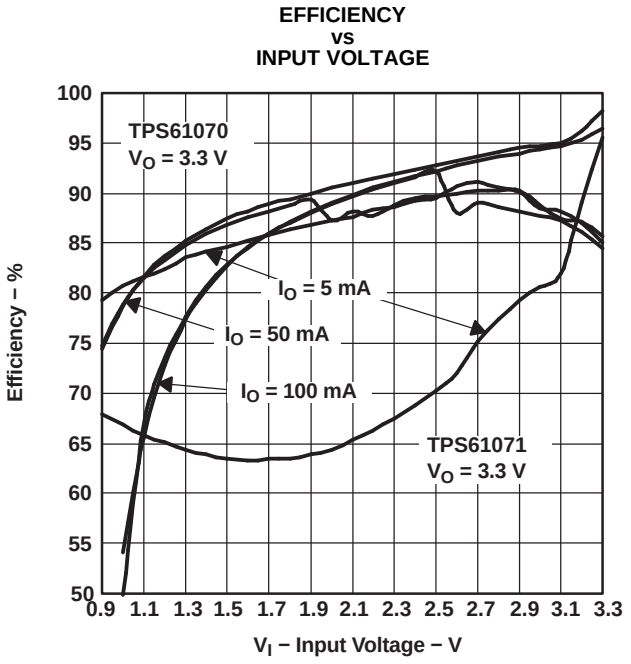


Figure 5.

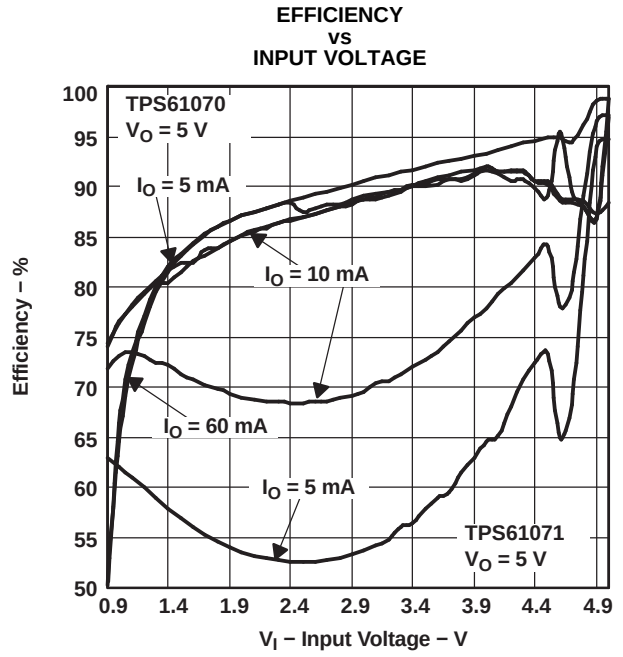


Figure 6.

## TYPICAL CHARACTERISTICS (continued)

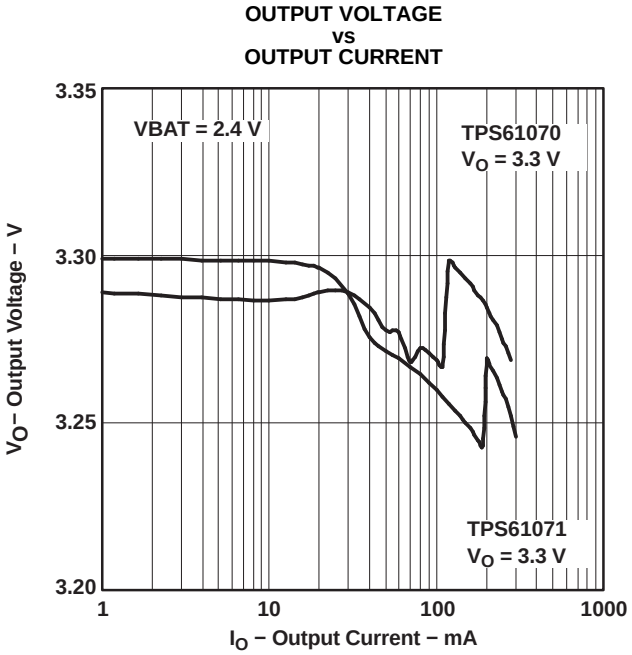


Figure 7.

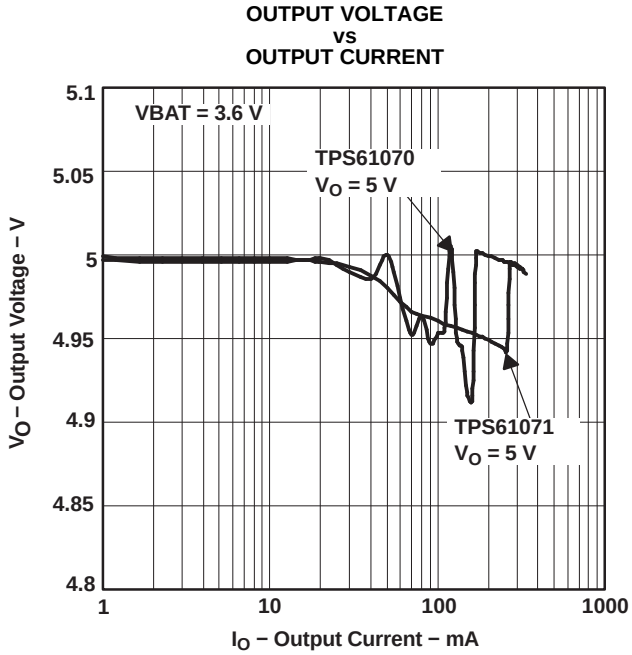


Figure 8.

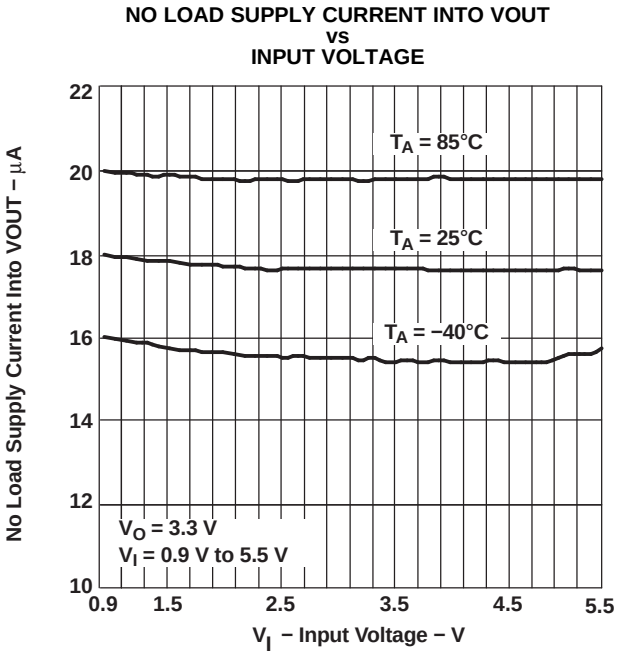


Figure 9.

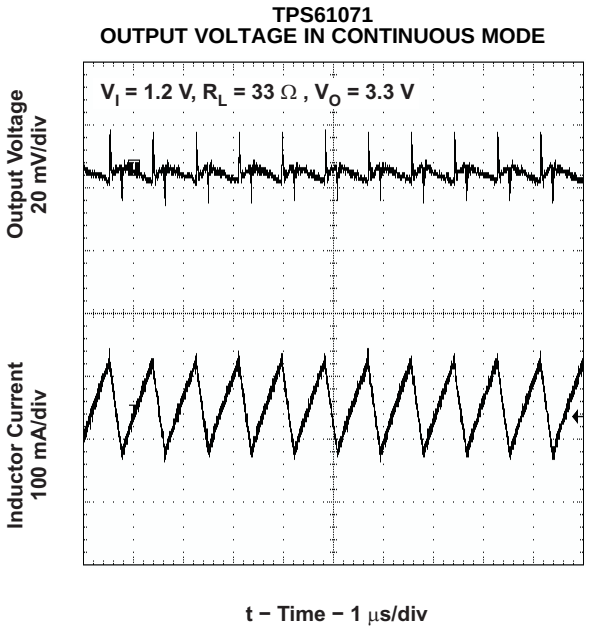


Figure 10.

## TYPICAL CHARACTERISTICS (continued)

**TPS61071**
**OUTPUT VOLTAGE IN CONTINUOUS MODE**

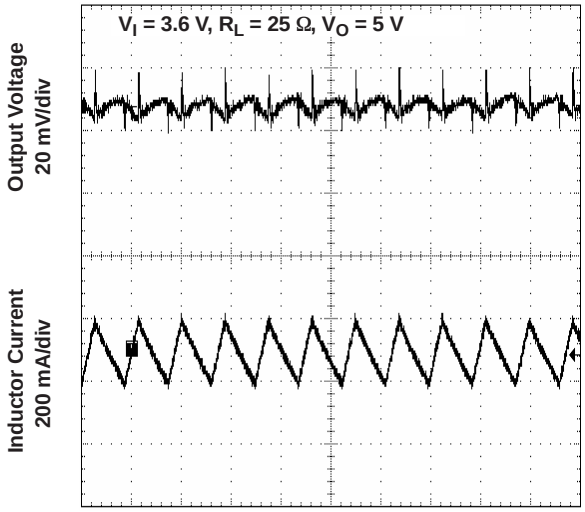


t – Time – 1 μs/div

**Figure 11.**

**TPS61070**
**OUTPUT VOLTAGE IN POWER-SAVE MODE**

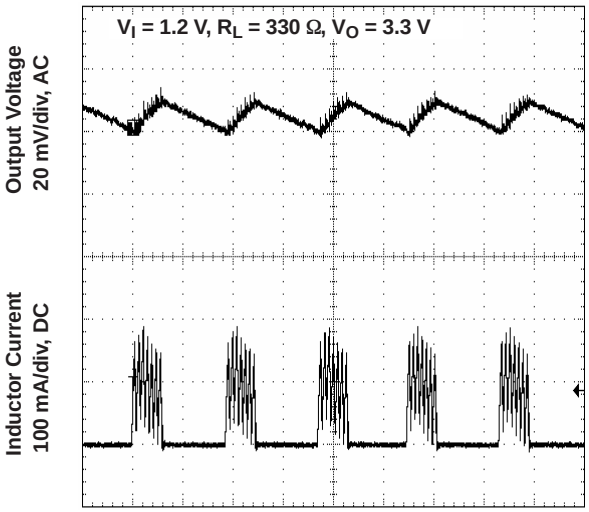


t – Time – 10 μs/div

**Figure 12.**

**TPS61070**
**OUTPUT VOLTAGE IN POWER-SAVE MODE**

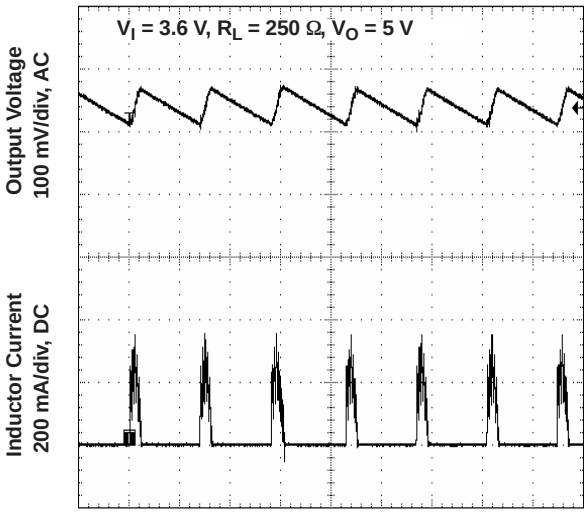


t – Time – 20 μs/div

**Figure 13.**

**TPS61071**
**LOAD TRANSIENT RESPONSE**

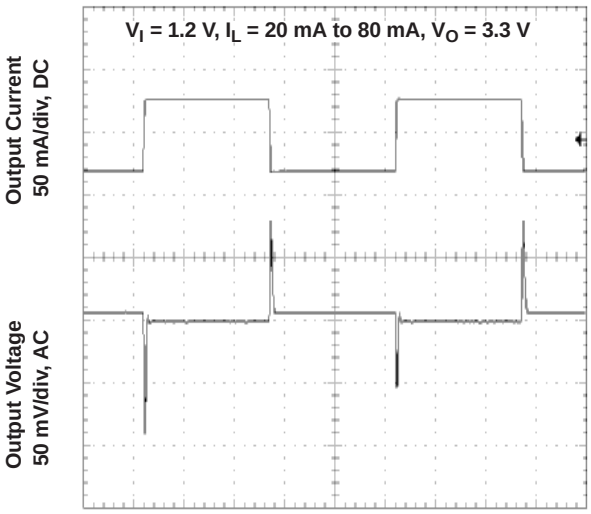


t – Time – 2 ms/div

**Figure 14.**

## TYPICAL CHARACTERISTICS (continued)

**TPS61071**
**LOAD TRANSIENT RESPONSE**

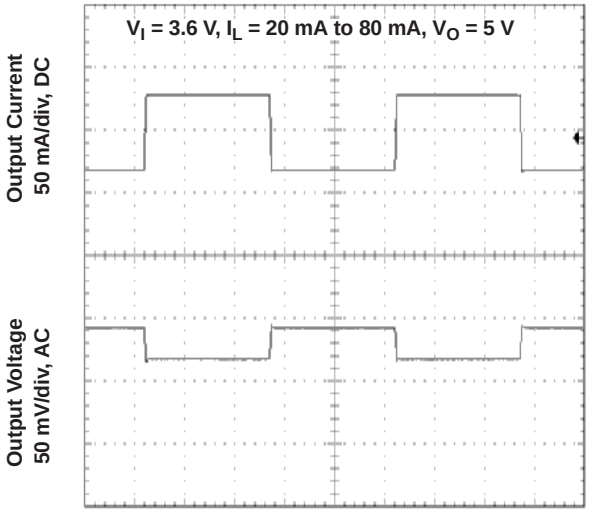


t – Time – 2 ms/div

**Figure 15.**

**TPS61071**
**LINE TRANSIENT RESPONSE**

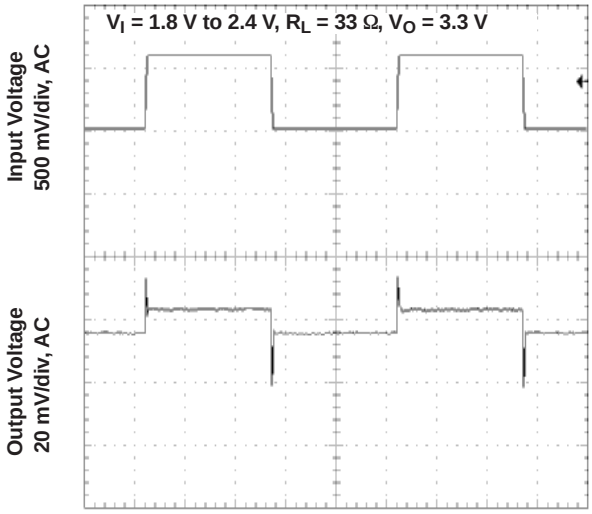


t – Time – 2 ms/div

**Figure 16.**

**TPS61071**
**LINE TRANSIENT RESPONSE**

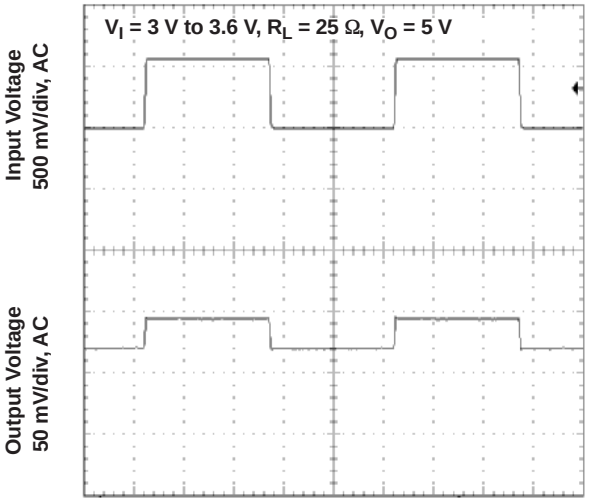


t – Time – 2 ms/div

**Figure 17.**

**TPS61070**
**START-UP AFTER ENABLE**

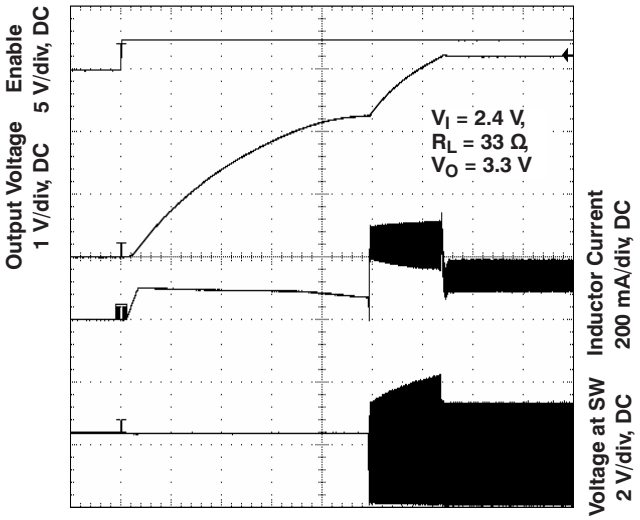


t – Time – 200 µs/div

**Figure 18.**

## TYPICAL CHARACTERISTICS (continued)

TPS61070
START-UP AFTER ENABLE

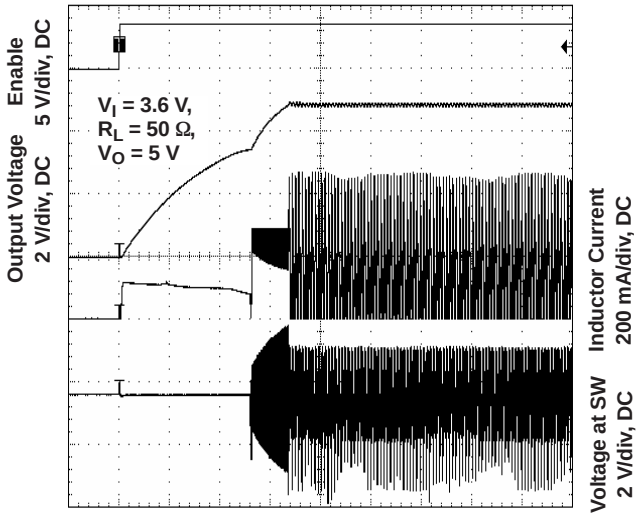


t – Time – 400 µs/div

Figure 19.

TPS61071
START-UP AFTER ENABLE

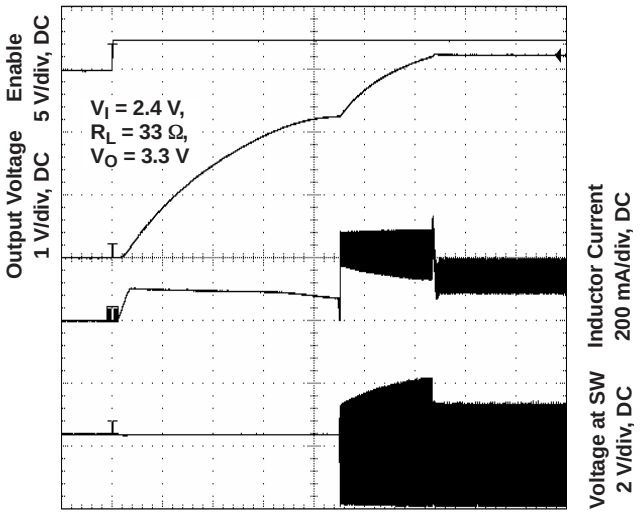


t – Time – 200 µs/div

Figure 20.

TPS61071
START-UP AFTER ENABLE

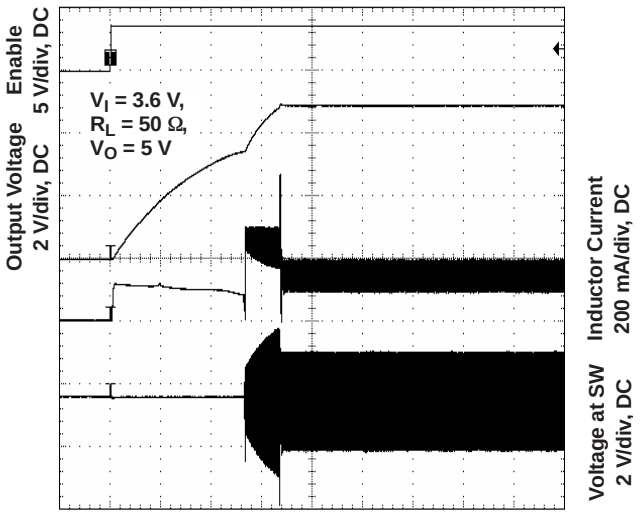


t – Time – 200 µs/div

Figure 21.

# DETAILED DESCRIPTION

## CONTROLLER CIRCUIT

The controller circuit of the device is based on a fixed frequency multiple feedforward controller topology. Input voltage, output voltage, and voltage drop on the NMOS switch are monitored and forwarded to the regulator. So, changes in the operating conditions of the converter directly affect the duty cycle and must not take the indirect and slow way through the control loop and the error amplifier. The control loop, determined by the error amplifier, only has to handle small signal errors. The input for it is the feedback voltage on the FB pin. It is compared with the internal reference voltage to generate an accurate and stable output voltage.

The peak current of the NMOS switch is also sensed to limit the maximum current flowing through the switch and the inductor. The typical peak-current limit is set to 600 mA. An internal temperature sensor prevents the device from getting overheated in case of excessive power dissipation.

### Synchronous Rectifier

The device integrates an N-channel and a P-channel MOSFET transistor to realize a synchronous rectifier. Because the commonly used discrete Schottky rectifier is replaced with a low $R_{DS(on)}$ PMOS switch, the power conversion efficiency reaches values above 90%. A special circuit is applied to disconnect the load from the input during shutdown of the converter. In conventional synchronous rectifier circuits, the backgate diode of the high-side PMOS is forward biased in shutdown and allows current flowing from the battery to the output. However, this device uses a special circuit which takes the cathode of the backgate diode of the high-side PMOS and disconnects it from the source when the regulator is not enabled (EN = low).

The benefit of this feature for the system design engineer is that the battery is not depleted during shutdown of the converter. No additional components must be added to the design to make sure that the battery is disconnected from the output of the converter.

### Device Enable

The device is put into operation when EN is set high. It is put into a shutdown mode when EN is set to GND. In shutdown mode, the regulator stops switching, all internal control circuitry is switched off, and the load is isolated from the input (as described in the *Synchronous Rectifier Section*). This also means that the output voltage can drop below the input voltage during shutdown. During start-up of the converter, the duty cycle and the peak current are limited in order to avoid high-peak currents drawn from the battery.

### Undervoltage Lockout

An undervoltage lockout function prevents the device from operating if the supply voltage on VBAT is lower than approximately 0.8 V. When in operation and the battery is being discharged, the device automatically enters the shutdown mode if the voltage on VBAT drops below approximately 0.8 V. This undervoltage lockout function is implemented in order to prevent the malfunctioning of the converter.

### Soft Start and Short-Circuit Protection

When the device enables, the internal start-up cycle starts with the first step, the precharge phase. During precharge, the rectifying switch is turned on until the output capacitor is charged to a value close to the input voltage. The rectifying switch is current limited during this phase. The current limit increases with the output voltage. This circuit also limits the output current under short-circuit conditions at the output. Figure 22 shows the typical precharge current vs output voltage for specific input voltages:

## DETAILED DESCRIPTION (continued)

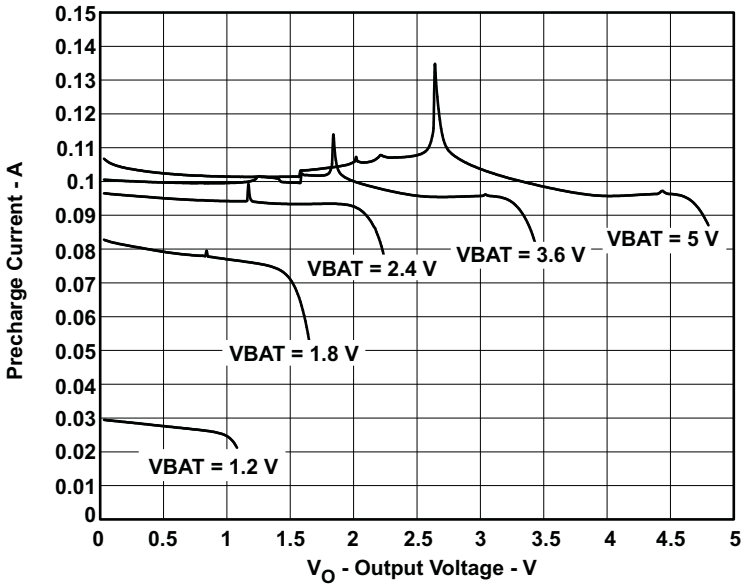


**Figure 22. Precharge and Short-Circuit Current**

After charging the output capacitor to the input voltage, the device starts switching. If the input voltage is below 1.8 V, the device works with a fixed duty cycle of 70% until the output voltage reaches 1.8 V. After that the duty cycle is set depending on the input output voltage ratio. Until the output voltage reaches its nominal value, the boost switch current limit is set to 50% of its nominal value to avoid high peak currents at the battery during start-up. As soon as the output voltage is reached, the regulator takes control, and the switch current limit is set back to 100%.

### Power-Save Mode

The TPS61070 and TPS61073 are capable of operating in two different modes. At light loads, when the inductor current becomes zero, they automatically enter the power-save mode to improve efficiency. In the power-save mode, the converters only operate when the output voltage trips below a set threshold voltage. It ramps up the output voltage with one or several pulses and returns to the power-save mode once the output voltage exceeds the set threshold voltage. If output power demand increases and the inductor current no longer goes below zero, the device again enters the fixed PWM mode. In this mode, there is no difference between the PWM only versions TPS61071 and TPS61072 and the power-save mode enabled versions TPS61070 and TPS61073.

# APPLICATION INFORMATION

## DESIGN PROCEDURE

The TPS6107x dc/dc converters are intended for systems powered by a single-cell, up to triple-cell alkaline, NiCd, NiMH battery with a typical terminal voltage between 0.9 V and 5.5 V. They can also be used in systems powered by one-cell Li-ion or Li-polymer with a typical voltage between 2.5 V and 4.2 V. Additionally, any other voltage source with a typical output voltage between 0.9 V and 5.5 V can power systems where the TPS6107x is used. Due to the nature of boost converters, the output voltage regulation is only maintained when the input voltage applied is lower than the programmed output voltage.

### Programming the Output Voltage

The output voltage of the TPS6107x dc/dc converter can be adjusted with an external resistor divider. The typical value of the voltage at the FB pin is 500 mV. The maximum recommended value for the output voltage is 5.5 V. The current through the resistive divider should be about 100 times greater than the current into the FB pin. The typical current into the FB pin is 0.01 µA, and the voltage across R2 is typically 500 mV. Based on those two values, the recommended value for R2 should be lower than 500 kΩ, in order to set the divider current at 1 µA or higher. Because of internal compensation circuitry, the value for this resistor should be in the range of 200 kΩ. From that, the value of resistor R1, depending on the needed output voltage ($V_O$), is calculated using Equation 1:

$$R1 = R2 \times \left( \frac{V_O}{V_{FB}} - 1 \right) = 180\ k\Omega \times \left( \frac{V_O}{500\ mV} - 1 \right) \quad (1)$$

For example, if an output voltage of 3.3 V is needed, a 1 MΩ resistor should be chosen for R1. If for any reason the value chosen for R2 is significantly lower than 200 kΩ, additional capacitance in parallel to R1 is recommended, if the device shows instable regulation of the output voltage. The required capacitance value is calculated using Equation 2:

$$C_{parR1} = 3\ pF \times \left( \frac{200\ k\Omega}{R2} - 1 \right) \quad (2)$$

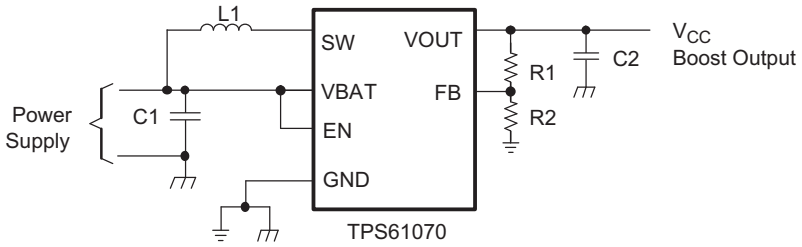


**Figure 23. Typical Application Circuit for Adjustable Output Voltage Option**

### Inductor Selection

A boost converter normally requires two main passive components for storing energy during the conversion. A boost inductor and a storage capacitor at the output are required. To select the boost inductor, it is recommended to keep the possible peak inductor current below the current limit threshold of the power switch in the chosen configuration. For example, the current limit threshold of the TPS6107x's switch is 600 mA. The highest peak current through the inductor and the switch depends on the output load, the input ($V_{BAT}$), and the output voltage ($V_{OUT}$). Estimation of the maximum average inductor current is done using Equation 3:

$$I_L = I_O \times \frac{VOUT}{VBAT \times 0.8} \quad (3)$$

For example, for an output current of 75 mA at 3.3 V, at least 340 mA of average current flows through the inductor at a minimum input voltage of 0.9 V.

The second parameter for choosing the inductor is the desired current ripple in the inductor. Normally, it is advisable to work with a ripple of less than 20% of the average inductor current. A smaller ripple reduces the magnetic hysteresis losses in the inductor, as well as output voltage ripple and EMI. But in the same way, regulation time rises at load changes. In addition, a larger inductor increases the total system costs. With these parameters, it is possible to calculate the value for the inductor by using Equation 4:

$$L = \frac{VBAT \times (VOUT - VBAT)}{\Delta I_L \times f \times VOUT} \quad (4)$$

Parameter *f* is the switching frequency and $\Delta I_L$ is the ripple current in the inductor, i.e., 40% $\Delta I_L$. In this example, the desired inductor has the value of 4 µH. With this calculated value and the calculated currents, it is possible to choose a suitable inductor. In typical applications, a 4.7 µH inductance is recommended. The device has been optimized to operate with inductance values between 2.2 µH and 10 µH. Nevertheless, operation with higher inductance values may be possible in some applications. Detailed stability analysis is then recommended. Care must be taken because load transients and losses in the circuit can lead to higher currents as estimated in Equation 4. Also, the losses in the inductor caused by magnetic hysteresis losses and copper losses are a major parameter for total circuit efficiency.

The following inductor series from different suppliers have been used with the TPS6107x converters:

**Table 1. List of Inductors**

| VENDOR | INDUCTOR SERIES |
|---|---|
| TDK | VLF3010 |
| | VLF4012 |
| Wurth Elektronik | 744031xxx |
| | 744042xxx |
| EPCOS | B82462-G4 |
| Cooper Electronics Technologies | SD18 |
| | SD20 |
| Taiyo Yuden | CB2016B xxx |
| | CB2518B xxx |

## Capacitor Selection

### *Input Capacitor*

At least a 10 µF input capacitor is recommended to improve transient behavior of the regulator and EMI behavior of the total power supply circuit. A ceramic capacitor or a tantalum capacitor with a 100-nF ceramic capacitor in parallel, placed close to the IC, is recommended.

### *Output Capacitor*

The major parameter necessary to define the output capacitor is the maximum allowed output voltage ripple of the converter. This ripple is determined by two parameters of the capacitor, the capacitance and the ESR. It is possible to calculate the minimum capacitance needed for the defined ripple, supposing that the ESR is zero, by using Equation 5:

$$C_{min} = \frac{I_O \times (VOUT - VBAT)}{f \times \Delta V \times VOUT} \quad (5)$$

Parameter *f* is the switching frequency and $\Delta V$ is the maximum allowed ripple.

With a chosen ripple voltage of 10 mV, a minimum capacitance of 4.5 µF is needed. In this value range, ceramic capacitors are a good choice. The ESR and the additional ripple created are negligible. It is calculated using Equation 6:

$$\Delta V_{ESR} = I_O \times R_{ESR} \quad (6)$$

The total ripple is the sum of the ripple caused by the capacitance and the ripple caused by the ESR of the capacitor. Additional ripple is caused by load transients. This means that the output capacitor has to completely supply the load during the charging phase of the inductor. The value of the output capacitance depends on the speed of the load transients and the load current during the load change. With the calculated minimum value of 4.5 µF and load transient considerations, the recommended output capacitance value is in a 10 µF range.

Care must be taken on capacitance loss caused by derating due to the applied dc voltage and the frequency characteristic of the capacitor. For example, larger form factor capacitors (in 1206 size) have their self resonant frequencies in the same frequency range as the TPS6107x operating frequency. So the effective capacitance of the capacitors used may be significantly lower. Therefore, the recommendation is to use smaller capacitors in parallel instead of one larger capacitor.

### Small Signal Stability

To analyze small signal stability in more detail, the small signal transfer function of the error amplifier and the regulator, which is given in Equation 7, can be used:

$$A_{(REG)} = \frac{d}{V_{(FB)}} = \frac{5 \times (R1 + R2)}{R2 \times (1 + i \times \omega \times 0.8\,\mu s)} \quad (7)$$

### Layout Considerations

As for all switching power supplies, the layout is an important step in the design, especially at high-peak currents and high switching frequencies. If the layout is not carefully done, the regulator could show stability problems as well as EMI problems. Therefore, use wide and short traces for the main current path and for the power ground tracks. The input capacitor, output capacitor, and the inductor should be placed as close as possible to the IC. Use a common ground node for power ground and a different one for control ground to minimize the effects of ground noise. Connect these ground nodes at any place close to the ground pin of the IC.

The feedback divider should be placed as close as possible to the ground pin of the IC. To lay out the control ground, it is recommended to use short traces as well, separated from the power ground traces. This avoids ground shift problems, which can occur due to superimposition of power ground current and control ground current.

## APPLICATION EXAMPLES

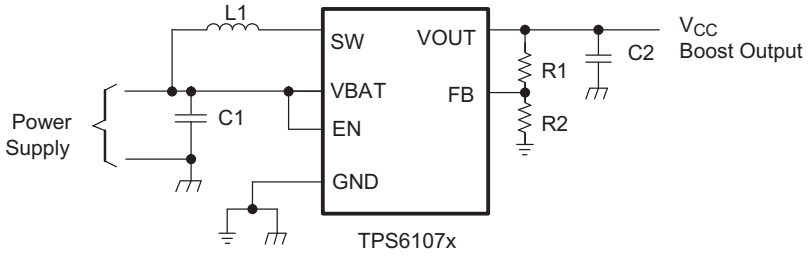


List of Components:
U1 = TPS61070DDC
L1 = 4.7 µH Wurth Elektronik 744031004
C1 = 2 x 4.7 µF, 0603, X7R/X5R Ceramic
C2 = 2 x 4.7 µF, 0603, X7R/X5R Ceramic

**Figure 24. Power Supply Solution for Maximum Output Power Operating from a Single or Dual Alkaline Cell**

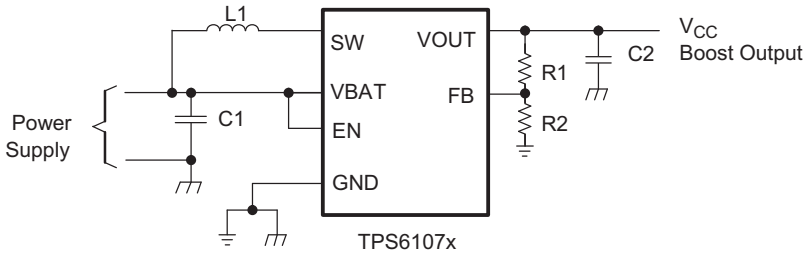


List of Components:
U1 = TPS61070DDC
L1 = 4.7 µH Taiyo Yuden CB2016B4R7M
C1 = 1 x 4.7 µF, 0603, X7R/X5R Ceramic
C2 = 2 x 4.7 µF, 0603, X7R/X5R Ceramic

**Figure 25. Power Supply Solution Having Small Total Solution Size**

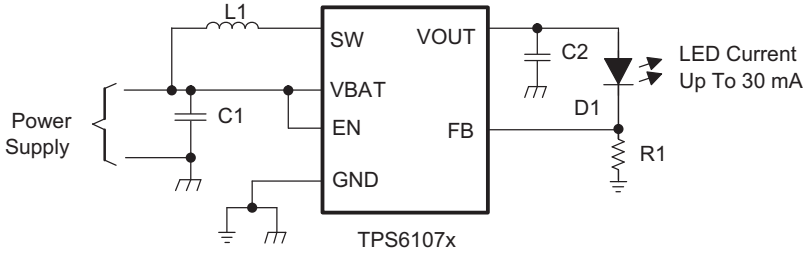


List of Components:
U1 = TPS61070DDC
L1 = 4.7 µH Taiyo Yuden CB2016B4R7M
C1 = 1 x 4.7 µF, 0603, X7R/X5R Ceramic
C2 = 2 x 4.7 µF, 0603, X7R/X5R Ceramic

**Figure 26. Power Supply Solution for Powering White LEDs in Lighting Applications**

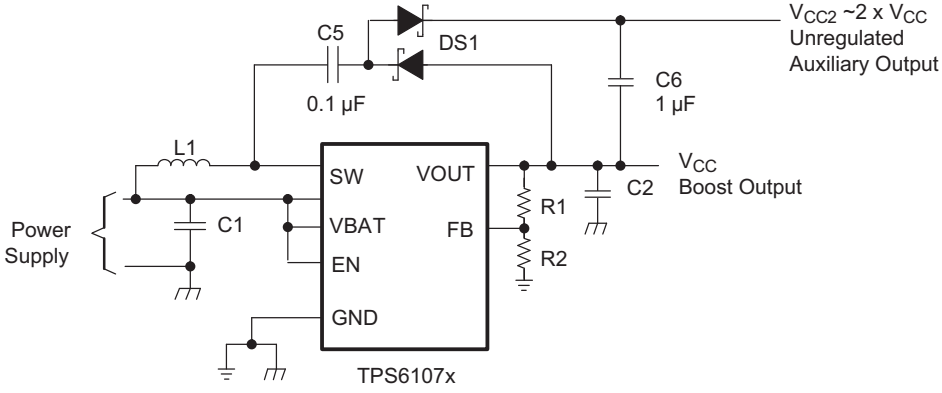


List of Components:
U1 = TPS61070DDC
L1 = 4.7 µH Wurth Elektronik 744031004
C1 = 2 x 4.7 µF, 0603, X7R/X5R Ceramic
C2 = 2 x 4.7 µF, 0603, X7R/X5R Ceramic

**Figure 27. Power Supply Solution With Auxiliary Positive Output Voltage**

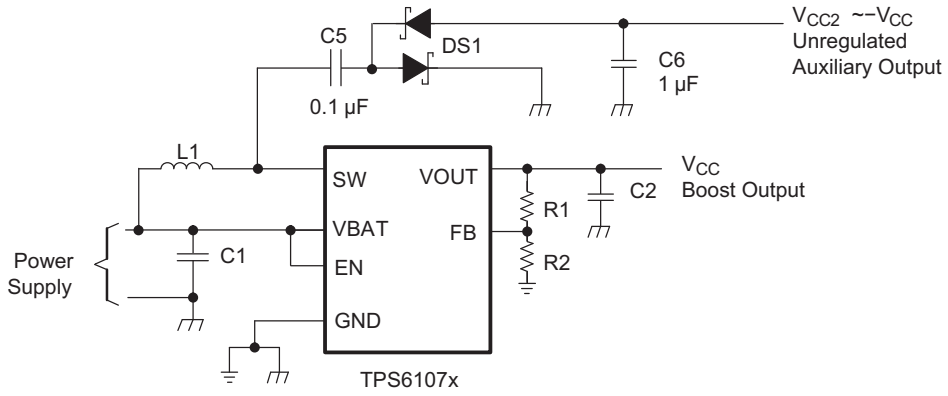


List of Components:
U1 = TPS61070DDC
L1 = 4.7 µH Wurth Elektronik 744031004
C1 = 2 x 4.7 µF, 0603, X7R/X5R Ceramic
C2 = 2 x 4.7 µF, 0603, X7R/X5R Ceramic

**Figure 28. Power Supply Solution With Auxiliary Negative Output Voltage**

## THERMAL INFORMATION

Implementation of integrated circuits in low-profile and fine-pitch surface-mount packages typically requires special attention to power dissipation. Many system-dependent issues such as thermal coupling, airflow, added heat sinks and convection surfaces, and the presence of other heat-generating components affect the power-dissipation limits of a given component.

Three basic approaches for enhancing thermal performance follow.

- Improving the power dissipation capability of the PCB design
- Improving the thermal coupling of the component to the PCB
- Introducing airflow in the system

The maximum recommended junction temperature ($T_J$) of the TPS6107x devices is 125°C. The thermal resistance of the 6-pin thin SOT package (DDC) is $R_{\Theta JA}$ = 130°C/W. Specified regulator operation is assured to a maximum ambient temperature $T_A$ of 85°C. Therefore, the maximum power dissipation is about 308 mW. More power can be dissipated if the maximum ambient temperature of the application is lower.

$$P_{D(MAX)} = \frac{T_{J(MAX)} - T_A}{R_{\theta JA}} = \frac{125°C - 85°C}{130\ °C/W} = 308\ mW \quad (8)$$

## PACKAGING INFORMATION

| Orderable Device | Status (1) | Package Type | Package Drawing | Pins | Package Qty | Eco Plan (2) | Lead/Ball Finish | MSL Peak Temp (3) |
|---|---|---|---|---|---|---|---|---|
| TPS61070DDCR | ACTIVE | SOT | DDC | 6 | 3000 | Green (RoHS & no Sb/Br) | CU NIPDAU | Level-1-260C-UNLIM |
| TPS61070DDCRG4 | ACTIVE | SOT | DDC | 6 | 3000 | Green (RoHS & no Sb/Br) | CU NIPDAU | Level-1-260C-UNLIM |
| TPS61071DDCR | ACTIVE | SOT | DDC | 6 | 3000 | Green (RoHS & no Sb/Br) | CU NIPDAU | Level-1-260C-UNLIM |
| TPS61071DDCRG4 | ACTIVE | SOT | DDC | 6 | 3000 | Green (RoHS & no Sb/Br) | CU NIPDAU | Level-1-260C-UNLIM |
| TPS61072DDCR | ACTIVE | SOT | DDC | 6 | 3000 | Green (RoHS & no Sb/Br) | CU NIPDAU | Level-1-260C-UNLIM |
| TPS61072DDCRG4 | ACTIVE | SOT | DDC | 6 | 3000 | Green (RoHS & no Sb/Br) | CU NIPDAU | Level-1-260C-UNLIM |
| TPS61073DDCR | ACTIVE | SOT | DDC | 6 | 3000 | Green (RoHS & no Sb/Br) | CU NIPDAU | Level-1-260C-UNLIM |
| TPS61073DDCRG4 | ACTIVE | SOT | DDC | 6 | 3000 | Green (RoHS & no Sb/Br) | CU NIPDAU | Level-1-260C-UNLIM |

(1) The marketing status values are defined as follows:
**ACTIVE:** Product device recommended for new designs.
**LIFEBUY:** TI has announced that the device will be discontinued, and a lifetime-buy period is in effect.
**NRND:** Not recommended for new designs. Device is in production to support existing customers, but TI does not recommend using this part in a new design.
**PREVIEW:** Device has been announced but is not in production. Samples may or may not be available.
**OBSOLETE:** TI has discontinued the production of the device.

(2) Eco Plan - The planned eco-friendly classification: Pb-Free (RoHS), Pb-Free (RoHS Exempt), or Green (RoHS & no Sb/Br) - please check http://www.ti.com/productcontent for the latest availability information and additional product content details.
**TBD:** The Pb-Free/Green conversion plan has not been defined.
**Pb-Free (RoHS):** TI's terms "Lead-Free" or "Pb-Free" mean semiconductor products that are compatible with the current RoHS requirements for all 6 substances, including the requirement that lead not exceed 0.1% by weight in homogeneous materials. Where designed to be soldered at high temperatures, TI Pb-Free products are suitable for use in specified lead-free processes.
**Pb-Free (RoHS Exempt):** This component has a RoHS exemption for either 1) lead-based flip-chip solder bumps used between the die and package, or 2) lead-based die adhesive used between the die and leadframe. The component is otherwise considered Pb-Free (RoHS compatible) as defined above.
**Green (RoHS & no Sb/Br):** TI defines "Green" to mean Pb-Free (RoHS compatible), and free of Bromine (Br) and Antimony (Sb) based flame retardants (Br or Sb do not exceed 0.1% by weight in homogeneous material)

(3) MSL, Peak Temp. -- The Moisture Sensitivity Level rating according to the JEDEC industry standard classifications, and peak solder temperature.

**Important Information and Disclaimer:**The information provided on this page represents TI's knowledge and belief as of the date that it is provided. TI bases its knowledge and belief on information provided by third parties, and makes no representation or warranty as to the accuracy of such information. Efforts are underway to better integrate information from third parties. TI has taken and continues to take reasonable steps to provide representative and accurate information but may not have conducted destructive testing or chemical analysis on incoming materials and chemicals. TI and TI suppliers consider certain information to be proprietary, and thus CAS numbers and other limited information may not be available for release.

In no event shall TI's liability arising out of such information exceed the total purchase price of the TI part(s) at issue in this document sold by TI to Customer on an annual basis.

## TAPE AND REEL INFORMATION

**REEL DIMENSIONS**

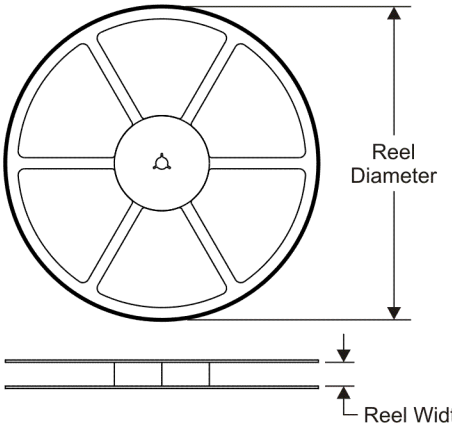


**TAPE DIMENSIONS**

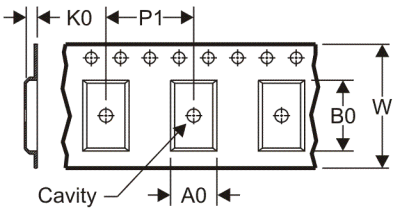


| | |
|---|---|
| A0 | Dimension designed to accommodate the component width |
| B0 | Dimension designed to accommodate the component length |
| K0 | Dimension designed to accommodate the component thickness |
| W | Overall width of the carrier tape |
| P1 | Pitch between successive cavity centers |

**QUADRANT ASSIGNMENTS FOR PIN 1 ORIENTATION IN TAPE**

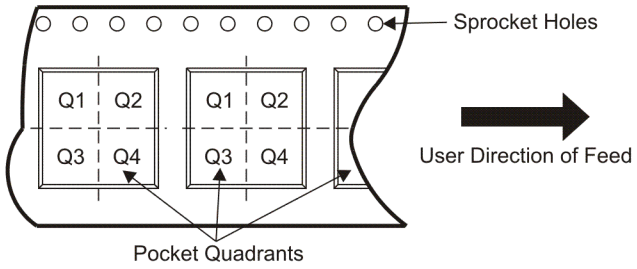


*All dimensions are nominal

| Device | Package Type | Package Drawing | Pins | SPQ | Reel Diameter (mm) | Reel Width W1 (mm) | A0 (mm) | B0 (mm) | K0 (mm) | P1 (mm) | W (mm) | Pin1 Quadrant |
|---|---|---|---|---|---|---|---|---|---|---|---|---|
| TPS61070DDCR | SOT | DDC | 6 | 3000 | 179.0 | 8.4 | 3.2 | 3.2 | 1.4 | 4.0 | 8.0 | Q3 |
| TPS61071DDCR | SOT | DDC | 6 | 3000 | 179.0 | 8.4 | 3.2 | 3.2 | 1.4 | 4.0 | 8.0 | Q3 |
| TPS61072DDCR | SOT | DDC | 6 | 3000 | 179.0 | 8.4 | 3.2 | 3.2 | 1.4 | 4.0 | 8.0 | Q3 |
| TPS61073DDCR | SOT | DDC | 6 | 3000 | 179.0 | 8.4 | 3.2 | 3.2 | 1.4 | 4.0 | 8.0 | Q3 |

**TAPE AND REEL BOX DIMENSIONS**

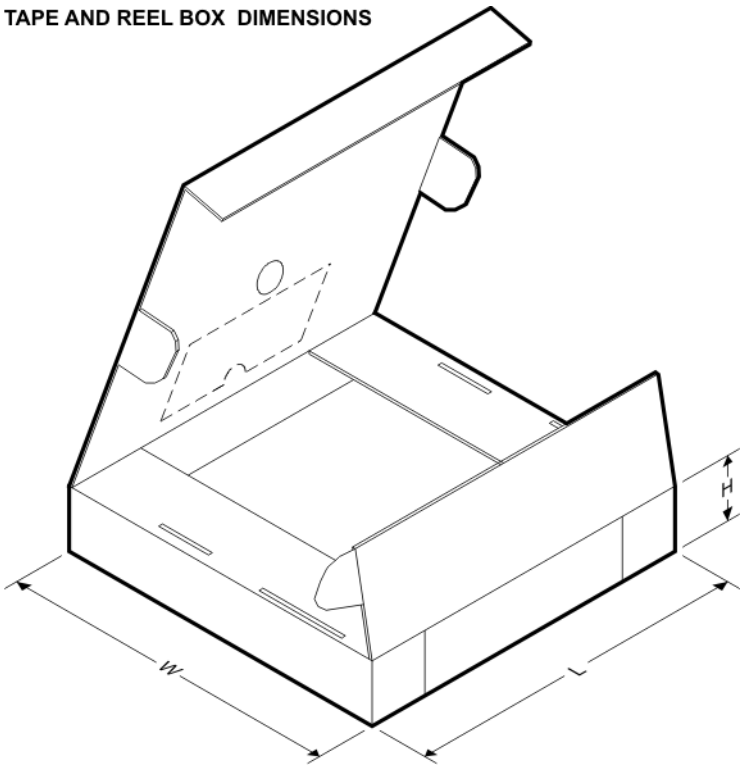


*All dimensions are nominal

| Device | Package Type | Package Drawing | Pins | SPQ | Length (mm) | Width (mm) | Height (mm) |
|---|---|---|---|---|---|---|---|
| TPS61070DDCR | SOT | DDC | 6 | 3000 | 195.0 | 200.0 | 45.0 |
| TPS61071DDCR | SOT | DDC | 6 | 3000 | 195.0 | 200.0 | 45.0 |
| TPS61072DDCR | SOT | DDC | 6 | 3000 | 195.0 | 200.0 | 45.0 |
| TPS61073DDCR | SOT | DDC | 6 | 3000 | 195.0 | 200.0 | 45.0 |

DDC (R–PDSO–G6) PLASTIC SMALL–OUTLINE

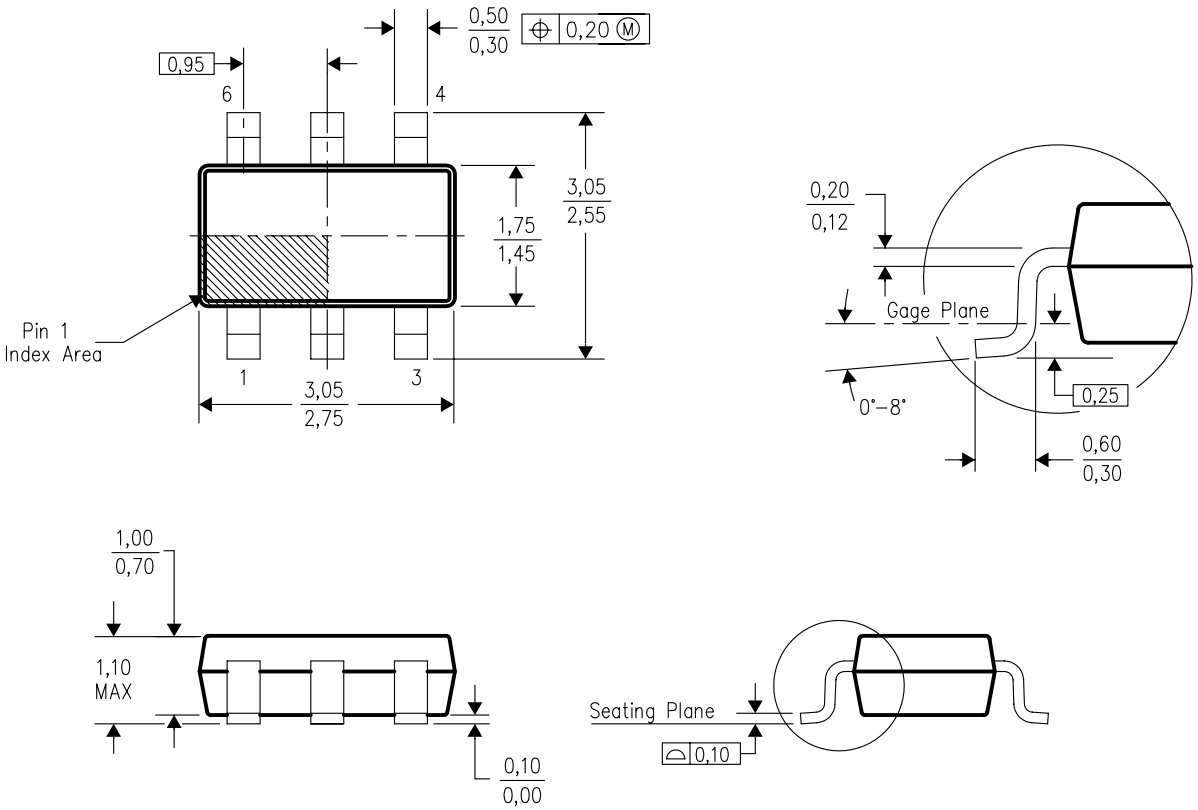


4204403–3/E 06/05

NOTES:
A. All linear dimensions are in millimeters.
B. This drawing is subject to change without notice.
C. Body dimensions do not include mold flash or protrusion.
D. Falls within JEDEC MO–193 variation AA (6 pin).

## IMPORTANT NOTICE

Texas Instruments Incorporated and its subsidiaries (TI) reserve the right to make corrections, modifications, enhancements, improvements, and other changes to its products and services at any time and to discontinue any product or service without notice. Customers should obtain the latest relevant information before placing orders and should verify that such information is current and complete. All products are sold subject to TI's terms and conditions of sale supplied at the time of order acknowledgment.

TI warrants performance of its hardware products to the specifications applicable at the time of sale in accordance with TI's standard warranty. Testing and other quality control techniques are used to the extent TI deems necessary to support this warranty. Except where mandated by government requirements, testing of all parameters of each product is not necessarily performed.

TI assumes no liability for applications assistance or customer product design. Customers are responsible for their products and applications using TI components. To minimize the risks associated with customer products and applications, customers should provide adequate design and operating safeguards.

TI does not warrant or represent that any license, either express or implied, is granted under any TI patent right, copyright, mask work right, or other TI intellectual property right relating to any combination, machine, or process in which TI products or services are used. Information published by TI regarding third-party products or services does not constitute a license from TI to use such products or services or a warranty or endorsement thereof. Use of such information may require a license from a third party under the patents or other intellectual property of the third party, or a license from TI under the patents or other intellectual property of TI.

Reproduction of TI information in TI data books or data sheets is permissible only if reproduction is without alteration and is accompanied by all associated warranties, conditions, limitations, and notices. Reproduction of this information with alteration is an unfair and deceptive business practice. TI is not responsible or liable for such altered documentation. Information of third parties may be subject to additional restrictions.

Resale of TI products or services with statements different from or beyond the parameters stated by TI for that product or service voids all express and any implied warranties for the associated TI product or service and is an unfair and deceptive business practice. TI is not responsible or liable for any such statements.

TI products are not authorized for use in safety-critical applications (such as life support) where a failure of the TI product would reasonably be expected to cause severe personal injury or death, unless officers of the parties have executed an agreement specifically governing such use. Buyers represent that they have all necessary expertise in the safety and regulatory ramifications of their applications, and acknowledge and agree that they are solely responsible for all legal, regulatory and safety-related requirements concerning their products and any use of TI products in such safety-critical applications, notwithstanding any applications-related information or support that may be provided by TI. Further, Buyers must fully indemnify TI and its representatives against any damages arising out of the use of TI products in such safety-critical applications.

TI products are neither designed nor intended for use in military/aerospace applications or environments unless the TI products are specifically designated by TI as military-grade or "enhanced plastic." Only products designated by TI as military-grade meet military specifications. Buyers acknowledge and agree that any such use of TI products which TI has not designated as military-grade is solely at the Buyer's risk, and that they are solely responsible for compliance with all legal and regulatory requirements in connection with such use.

TI products are neither designed nor intended for use in automotive applications or environments unless the specific TI products are designated by TI as compliant with ISO/TS 16949 requirements. Buyers acknowledge and agree that, if they use any non-designated products in automotive applications, TI will not be responsible for any failure to meet such requirements.

Following are URLs where you can obtain information on other Texas Instruments products and application solutions:

| **Products** | | **Applications** | |
|---|---|---|---|
| Amplifiers | amplifier.ti.com | Audio | www.ti.com/audio |
| Data Converters | dataconverter.ti.com | Automotive | www.ti.com/automotive |
| DSP | dsp.ti.com | Broadband | www.ti.com/broadband |
| Clocks and Timers | www.ti.com/clocks | Digital Control | www.ti.com/digitalcontrol |
| Interface | interface.ti.com | Medical | www.ti.com/medical |
| Logic | logic.ti.com | Military | www.ti.com/military |
| Power Mgmt | power.ti.com | Optical Networking | www.ti.com/opticalnetwork |
| Microcontrollers | microcontroller.ti.com | Security | www.ti.com/security |
| RFID | www.ti-rfid.com | Telephony | www.ti.com/telephony |
| RF/IF and ZigBee® Solutions | www.ti.com/lprf | Video & Imaging | www.ti.com/video |
| | | Wireless | www.ti.com/wireless |

Mailing Address: Texas Instruments, Post Office Box 655303, Dallas, Texas 75265
Copyright © 2008, Texas Instruments Incorporated