Switch Mode Power Supplies
Single Output
AC/DC Power Supply

ALS75-24

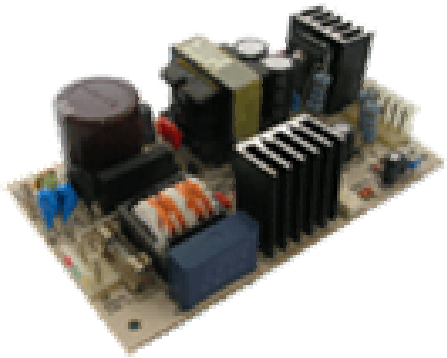

Description:

The ALS75-24 is a single output power supply. It provides a DC output power in a cost-effective open frame package. Excellent performance specifications are provided, together with compliance to European EMC (EN55022, Class A), and Low Voltage directive (TUV EN60950).

Specifications (@25C)

Input Characteristics:

Input Voltage (5):	110/220Vac (90-260Vac, 120-370Vdc)
Input Frequency Range:	47-63Hz
Max Input Current:	1.8A @ 110Vac; 0.9A @ 220Vac
Max Inrush Current:	30A @ 220VAc
Hold-Up Time:	17ms typ @ 110Vac, 100% Load

Output Characteristics:

Output Voltage:	24.0Vdc
Output Current (1,6):	3.1A
Output Power (1):	75W
Ripple & Noise (20MHz BW):	100mV
Line Regulation (4):	1.0%
Load Regulation (3):	2.0%
Temperature Drift:	0.02%/°C
Rise-UP Time:	500ms max, 110Vac, 100% Load
Over Current Protection:	Shutdown, O.C.P Point>120%, recycle AC supply to recover
Over Voltage Protection:	>105% Zener across output
Short Circuit Protection:	Unit shutdown, recycle AC supply to recover
Adj. O/P Voltage Range (1,2):	±10%

Environmental Specifications:

EMI (Conducted RFI):	Built to comply with EN55022-B
EFT:	Built to comply with IEC61000-4-4
ESD:	Built to comply with IEC61000-4-2
Surge:	Built to comply with IEC61000-4-5
Operating Temperature:	Convection cooling 0 to 50°C:100%; 60°C:70%
Operating Humidity:	30% to 90% RH
Storage Temperature:	-25 to 85°C
Storage Humidity:	10% to 95% RH
Cooling:	Convection cooling
Vibration:	1min sweep 10-55Hz, 2G Amplitude, X,Y,Z axis 1hr each
Shock:	<20G

General Specifications:

Efficiency:	70% Typical
Dimensions (WxLxH):	76.20x127x42mm
Weight:	350g
Warranty:	2 years @ 40°C, 100% Load

Safety Standards:

Standard:	UL 60950 (UL File No: E204980) TUV EN60950 (TUV No: 50070245)
Dielectric Strength:	I/P-O/P:3kVac, I/P-FG:2.5kVac, <10mA, 1min
Insulation Resistance:	O/P-FG: 5000VDC>100Mohms

DERATING CURVE

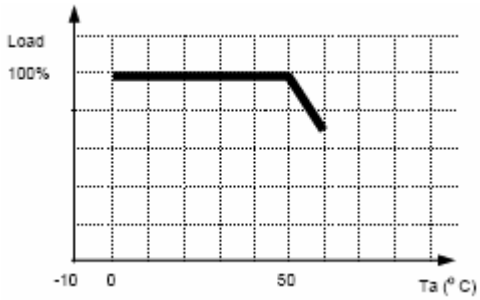

Web: www.TriadMagnetics.com
Phone 951-277-0757
Fax 951-277-2757

22520B Temescal Canyon Road Corona, California
92883

Release Date: February 22, 2006
Revision: A

Switch Mode Power Supplies
Single Output
AC/DC Power Supply

Technical Notes:

1. Throughout Vin range. Vout must be measured as near as possible to the power supply.
2. Total output power by any combination of channel must not exceed Pout(m).
3. Vout deviation as Iout varies from Io(min)-Io(max).
4. Vout deviation as Vin varies from 90-0260Vac.
5. Where UL and CSA is concerned, official rated input voltage range is 100-120Vac/200-240 Vac.

Outline Dimensions (mm):

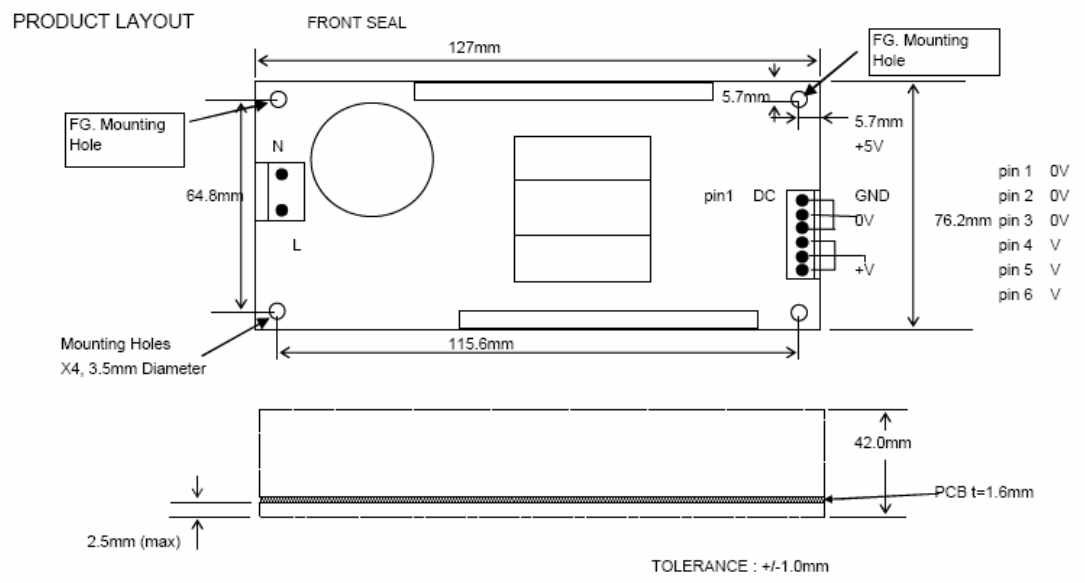

Mounting Method:

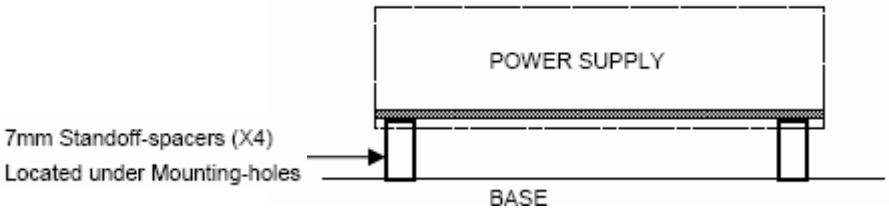

Connector Types:

AC Housing: Molex 09-50-3031
DC Housing: Molex 09-50-3061

Crimp Terminals: Molex 08-50-0105
Crimp Terminals: Molex 08-50-0105

RoHS Compliance: This power supply meets the requirements 2002/95/EC, know as the RoHS initiative.

* Upon printing, this document is considered “uncontrolled”. Please contact Triad Magnetics’ website for the most current version.

Web: www.TriadMagnetics.com
Phone 951-277-0757
Fax 951-277-2757

22520B Temescal Canyon Road Corona, California
92883

Release Date: February 22, 2006
Revision: A