TRIAD MAGNETICS

Common Mode Frame Chokes

CMF16-153131

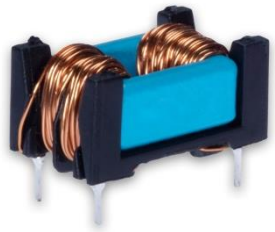

Description:
The CMF16 Series provides exceptional common-mode suppression and exceptional stray inductance to suppress differential-mode noise. In effect, the CMF16 Series combines the features of two separate components into one.

Construction:
Constructed with UL rated 130°C (Class B) materials.

Electrical Specifications (@20°C) @ 10kHz

Inductance(1)	$L_{stray\ typ}$	Amps(2) (A)	Max. DC (Ω) Resistance
15mH	290uH	1.3	0.47

1. Inductance Tolerance: -30/+50%
2. Inductance per winding.
3. Operating Temperature: -40 – 105°C
4. Storage Temperature: -25°C – +40°C, ≤ 75% RH
5. Weight: 9g

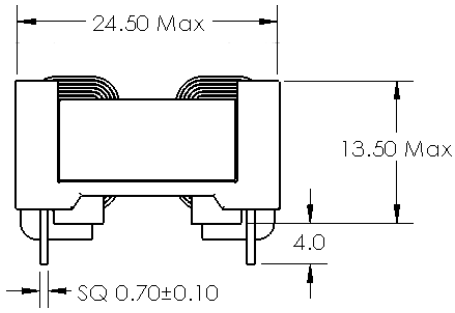

CMF16 Series – Frequency Response Curve

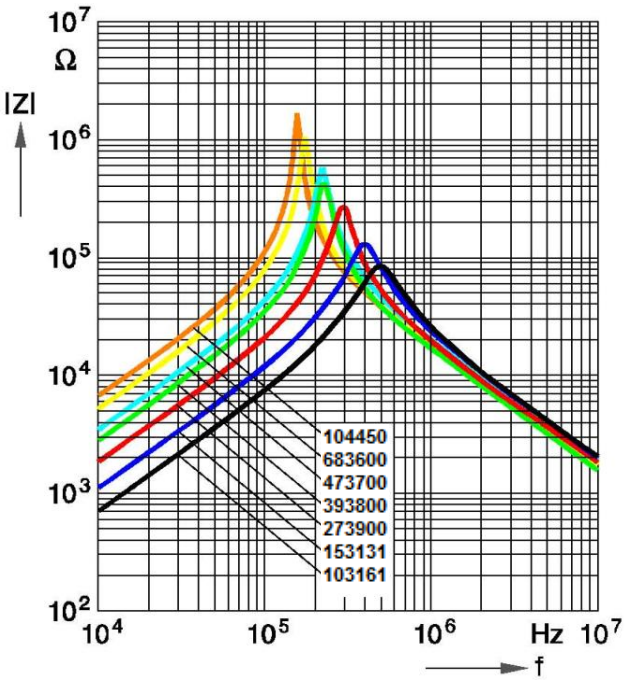

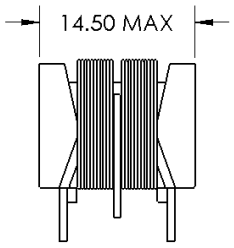

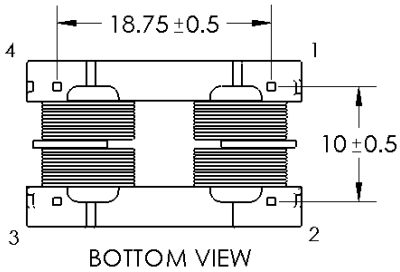

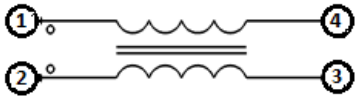

Safety: 1500VAC Dielectric Strength between windings.

RoHS Compliance: As of manufacturing date February 2005, all standard products meet the requirements of 2011/65/EU, known as the RoHS initiative.

*Upon printing, this document is considered "uncontrolled". Please contact Triad Magnetics website for the most current version. For soldering and washing information please see http://www.triadmagnetics.com

Web: www.TriadMagnetics.com
Phone 951-277-0757
Fax 951-277-2757

460 Harley Knox Blvd.
Perris, California 92571

Publish Date: May 03, 2017

Downloaded from Arrow.com.