"Full Bridge" IGBT MTP (Ultrafast NPT IGBT), 20 A

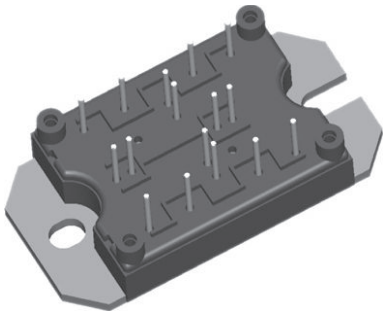

MTP

FEATURES

- Ultrafast non punch through (NPT) technology
- Positive $V_{CE(on)}$ temperature coefficient
- 10 µs short circuit capability
- HEXFRED® antiparallel diodes with ultrasoft reverse recovery
- Low diode V_F
- Square RBSOA
- Al_2O_3 DBC substrate
- Very low stray inductance design for high speed operation
- UL approved file E78996
- Designed and qualified for industrial level
- Material categorization: for definitions of compliance please see www.vishay.com/doc?99912

Pb-free
RoHS COMPLIANT

PRIMARY CHARACTERISTICS	
V_{CES}	1200 V
I_C at T_C = 96 °C	20 A
$V_{CE(on)}$ (typical) at I_C = 20 A, 25 °C	3.29 V
Speed	8 kHz to 30 kHz
Package	MTP
Circuit configuration	Full bridge

BENEFITS

- Optimized for welding, UPS and SMPS applications
- Rugged with ultrafast performance
- Outstanding ZVS and hard switching operation
- Low EMI, requires less snubbing
- Excellent current sharing in parallel operation
- Direct mounting to heatsink
- PCB solderable terminals
- Very low junction to case thermal resistance

ABSOLUTE MAXIMUM RATINGS

PARAMETER	SYMBOL	TEST CONDITIONS	MAX.	UNITS
Collector to emitter breakdown voltage	V_{CES}		1200	V
Continuous collector current	I_C	T_C = 96 °C	20	A
Pulsed collector current	I_{CM}		100	
Clamped inductive load current	I_{LM}		100	
Diode maximum forward current	I_{FM}		100	
Gate to emitter voltage	V_{GE}		± 20	V
RMS isolation voltage	V_{ISOL}	Any terminal to case, t = 1 min	2500	
Maximum power dissipation (only IGBT)	P_D	T_C = 25 °C	240	W
		T_C = 100 °C	96	
Operating junction temperature range	T_J		-40 to +150	°C

For technical questions within your region: DiodesAmericas@vishay.com, DiodesAsia@vishay.com, DiodesEurope@vishay.com
THIS DOCUMENT IS SUBJECT TO CHANGE WITHOUT NOTICE. THE PRODUCTS DESCRIBED HEREIN AND THIS DOCUMENT ARE SUBJECT TO SPECIFIC DISCLAIMERS, SET FORTH AT www.vishay.com/doc?91000
Downloaded from Arrow.com.

ELECTRICAL SPECIFICATIONS (T_J = 25 °C unless otherwise noted)						
PARAMETER	**SYMBOL**	**TEST CONDITIONS**	**MIN.**	**TYP.**	**MAX.**	**UNITS**
Collector to emitter breakdown voltage	$V_{(BR)CES}$	V_{GE} = 0 V, I_C = 250 μA	1200	-	-	V
Temperature coefficient of breakdown voltage	$\Delta V_{(BR)CES}/\Delta T_J$	V_{GE} = 0 V, I_C = 3 mA (25 to 125 °C)	-	+1.3	-	V/°C
Collector to emitter saturation voltage	$V_{CE(on)}$	V_{GE} = 15 V, I_C = 20 A	-	3.29	3.59	V
		V_{GE} = 15 V, I_C = 40 A	-	4.42	4.66	
		V_{GE} = 15 V, I_C = 20 A, T_J = 125 °C	-	3.87	4.11	
		V_{GE} = 15 V, I_C = 40 A, T_J = 125 °C	-	5.32	5.70	
		V_{GE} = 15 V, I_C = 20 A, T_J = 150 °C	-	3.99	4.27	
Gate threshold voltage	$V_{GE(th)}$	V_{CE} = V_{GE}, I_C = 250 μA	4	-	6	
Temperature coefficient of threshold voltage	$V_{GE(th)}/\Delta T_J$	V_{CE} = V_{GE}, I_C = 3 mA (25 to 125 °C)	-	-14	-	mV/°C
Transconductance	g_{fe}	V_{CE} = 50 V, I_C = 20 A, PW = 80 μs	-	17.5	-	S
Zero gate voltage collector current	I_{CES} (1)	V_{GE} = 0 V, V_{CE} = 1200 V, T_J = 25 °C	-	-	250	μA
		V_{GE} = 0 V, V_{CE} = 1200 V, T_J = 125 °C	-	0.7	3.0	mA
		V_{GE} = 0 V, V_{CE} = 1200 V, T_J = 150 °C	-	2.9	9.0	
Gate to emitter leakage current	I_{GES}	V_{GE} = ± 20 V	-	-	± 250	nA

Note

(1) I_{CES} includes also opposite leg overall leakage

SWITCHING CHARACTERISTICS (T_J = 25 °C unless otherwise specified)						
PARAMETER	**SYMBOL**	**TEST CONDITIONS**	**MIN.**	**TYP.**	**MAX.**	**UNITS**
Total gate charge (turn-on)	Q_g	I_C = 20 A V_{CC} = 600 V V_{GE} = 15 V	-	176	264	nC
Gate to emitter charge (turn-on)	Q_{ge}		-	19	30	
Gate to collector charge (turn-on)	Q_{gc}		-	89	134	
Turn-on switching loss	E_{on}	V_{CC} = 600 V, I_C = 20 A, V_{GE} = 15 V, R_g = 5 Ω, L = 200 μH, T_J = 25 °C, energy losses include tail and diode reverse recovery	-	0.513	0.770	mJ
Turn-off switching loss	E_{off}		-	0.402	0.603	
Total switching loss	E_{tot}		-	0.915	1.373	
Turn-on switching loss	E_{on}	V_{CC} = 600 V, I_C = 20 A, V_{GE} = 15 V, R_g = 5 Ω, L = 200 μH, T_J = 125 °C, energy losses include tail and diode reverse recovery	-	0.930	1.395	
Turn-off switching loss	E_{off}		-	0.610	0.915	
Total switching loss	E_{tot}		-	1.540	2.310	
Input capacitance	C_{ies}	V_{GE} = 0 V V_{CC} = 30 V f = 1.0 MHz	-	2530	3790	pF
Output capacitance	C_{oes}		-	344	516	
Reverse transfer capacitance	C_{res}		-	78	117	
Reverse bias safe operating area	RBSOA	T_J = 150 °C, I_C = 120 A V_{CC} = 1000 V, V_p = 1200 V R_g = 5 Ω, V_{GE} = + 15 V to 0 V	Fullsquare			
Short circuit safe operating area	SCSOA	T_J = 150 °C V_{CC} = 900 V, V_p = 1200 V R_g = 5 Ω, V_{GE} = + 15 V to 0 V	10	-	-	μs

DIODE SPECIFICATIONS (T_J = 25 °C unless otherwise specified)						
PARAMETER	**SYMBOL**	**TEST CONDITIONS**	**MIN.**	**TYP.**	**MAX.**	**UNITS**
Diode forward voltage drop	V_{FM}	I_C = 20 A	-	2.48	2.94	V
		I_C = 40 A	-	3.28	3.90	
		I_C = 20 A, T_J = 125 °C	-	2.44	2.84	
		I_C = 40 A, T_J = 125 °C	-	3.45	4.14	
		I_C = 20 A, T_J = 150 °C	-	2.21	2.93	
Reverse recovery energy of the diode	E_{rec}	V_{GE} = 15 V, R_g = 5 Ω, L = 200 μH V_{CC} = 600 V, I_C = 20 A T_J = 125 °C	-	420	630	μJ
Diode reverse recovery time	t_{rr}		-	98	150	ns
Peak reverse recovery current	I_{rr}		-	33	50	A

For technical questions within your region: DiodesAmericas@vishay.com, DiodesAsia@vishay.com, DiodesEurope@vishay.com
THIS DOCUMENT IS SUBJECT TO CHANGE WITHOUT NOTICE. THE PRODUCTS DESCRIBED HEREIN AND THIS DOCUMENT ARE SUBJECT TO SPECIFIC DISCLAIMERS, SET FORTH AT www.vishay.com/doc?91000
Downloaded from Arrow.com.

THERMAL AND MECHANICAL SPECIFICATIONS							
PARAMETER		SYMBOL	TEST CONDITIONS	MIN.	TYP.	MAX.	UNITS
Operating junction temperature range		T_J		-40	-	150	°C
Storage temperature range		T_{Stg}		-40	-	125	
Junction to case	IGBT	R_{thJC}		-	0.53	0.64	°C/W
	Diode			-	0.69	0.83	
Case to sink per module		R_{thCS}	Heatsink compound thermal conductivity = 1 W/mK	-	0.06	-	
Clearance			External shortest distance in air between 2 terminals	5.5	-	-	mm
Creepage			Shortest distance along external surface of the insulating material between 2 terminals	8	-	-	
Mounting torque			A mounting compound is recommended and the torque should be checked after 3 hours to allow for the spread of the compound. Lubricated threads.	3 ± 10 %			Nm
Weight				66			g

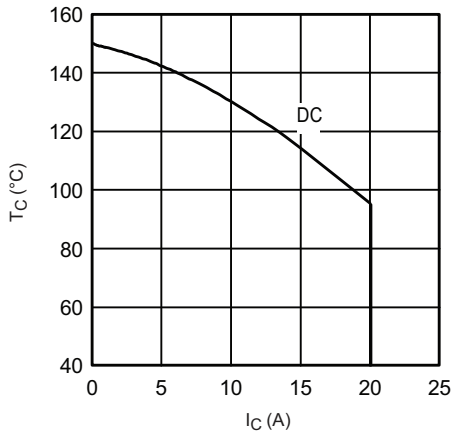

Fig. 1 - Maximum DC Collector Current vs. Case Temperature

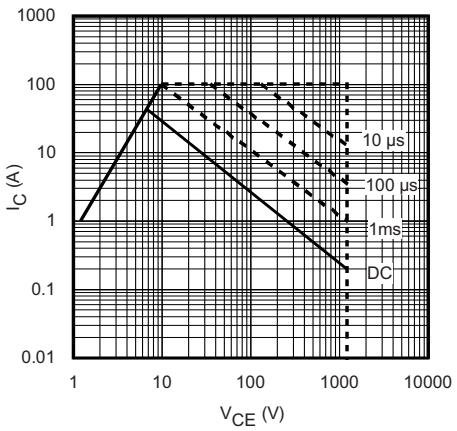

Fig. 3 - Forward SOA
T_C = 25 °C; $T_J \leq$ 150 °C

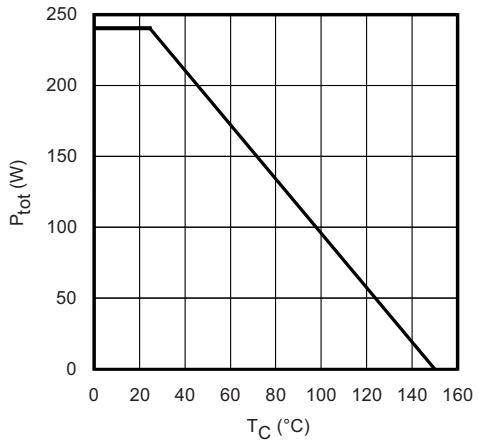

Fig. 2 - Power Dissipation vs. Case Temperature

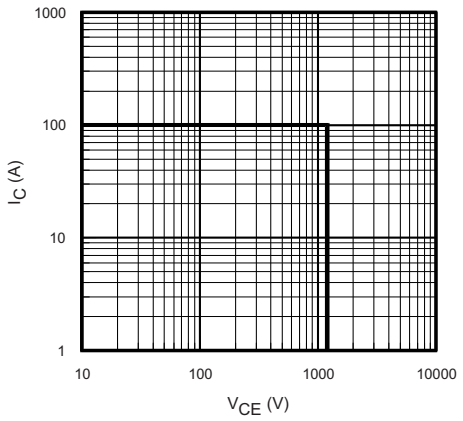

Fig. 4 - Reverse Bias SOA
T_J = 150 °C; V_{GE} = 15 V

For technical questions within your region: DiodesAmericas@vishay.com, DiodesAsia@vishay.com, DiodesEurope@vishay.com
THIS DOCUMENT IS SUBJECT TO CHANGE WITHOUT NOTICE. THE PRODUCTS DESCRIBED HEREIN AND THIS DOCUMENT ARE SUBJECT TO SPECIFIC DISCLAIMERS, SET FORTH AT www.vishay.com/doc?91000
Downloaded from Arrow.com.

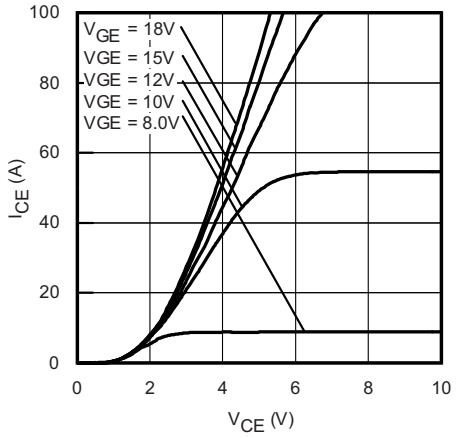

Fig. 5 - Typical IGBT Output Characteristics
T_J = -40 °C; t_p = 80 µs

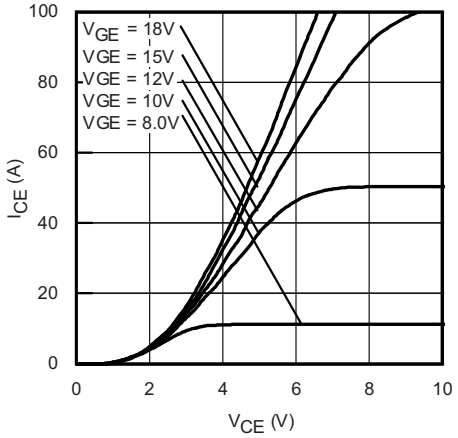

Fig. 6 - Typical IGBT Output Characteristics
T_J = 25 °C; t_p = 80 µs

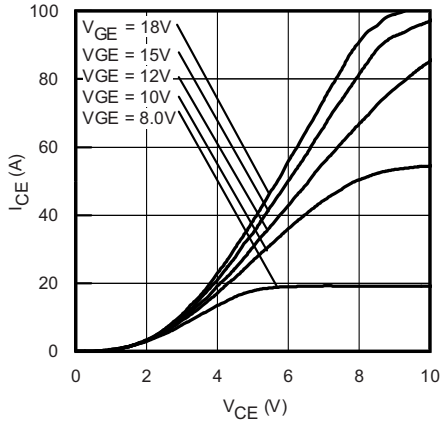

Fig. 7 - Typical IGBT Output Characteristics
T_J = 125 °C; t_p = 80 µs

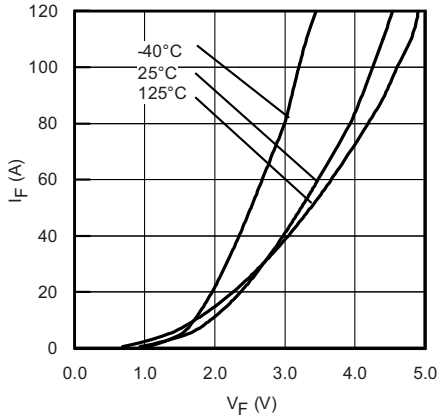

Fig. 8 - Typical Diode Forward Characteristics
t_p = 80 µs

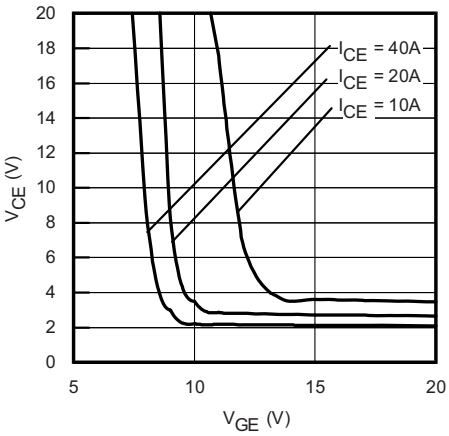

Fig. 9 - Typical V_{CE} vs. V_{GE}
T_J = -40 °C

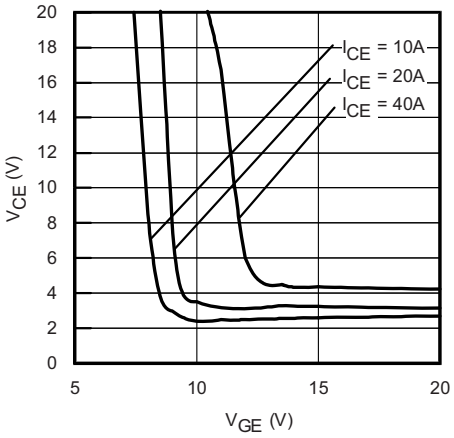

Fig. 10 - Typical V_{CE} vs. V_{GE}
T_J = 25 °C

For technical questions within your region: DiodesAmericas@vishay.com, DiodesAsia@vishay.com, DiodesEurope@vishay.com
THIS DOCUMENT IS SUBJECT TO CHANGE WITHOUT NOTICE. THE PRODUCTS DESCRIBED HEREIN AND THIS DOCUMENT ARE SUBJECT TO SPECIFIC DISCLAIMERS, SET FORTH AT www.vishay.com/doc?91000
Downloaded from Arrow.com.

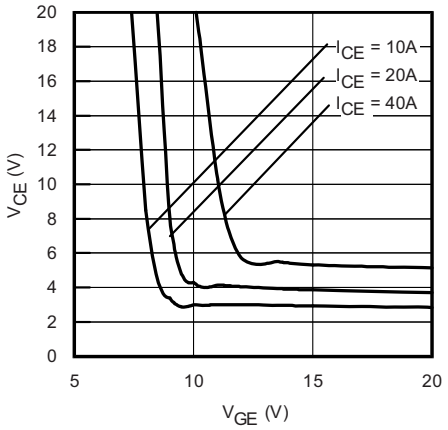

Fig. 11 - Typical V_{CE} vs. V_{GE}
T_J = 125 °C

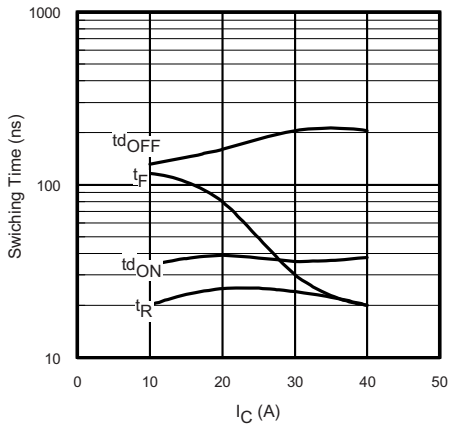

Fig. 14 - Typical Switching Time vs. I_C
T_J = 150 °C; L = 1.4 mH; V_{CE} = 400 V
R_g = 100 Ω; V_{GE} = 15 V

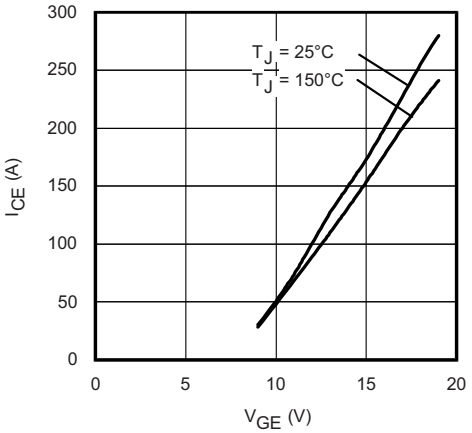

Fig. 12 - Typical Transfer Characteristics
V_{CE} = 50 V; t_p = 10 µs

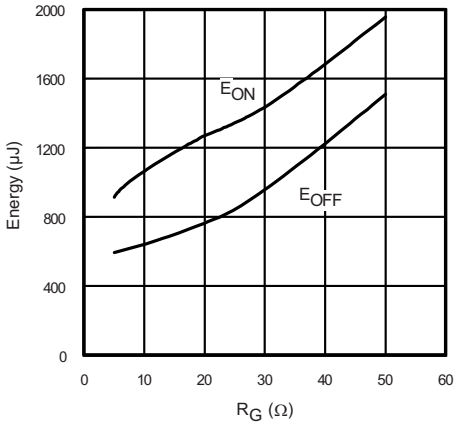

Fig. 15 - Typical Energy Loss vs. R_g
T_J = 150 °C; L = 1.4 mH; V_{CE} = 400 V
I_{CE} = 5.0 A; V_{GE} = 15 V

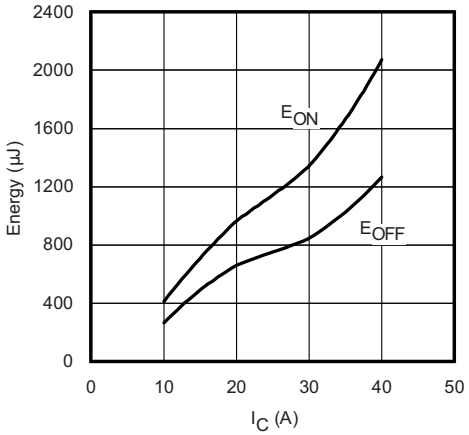

Fig. 13 - Typical Energy Loss vs. I_C
T_J = 150 °C; L = 1.4 mH; V_{CE} = 400 V
R_g = 5 Ω; V_{GE} = 15 V

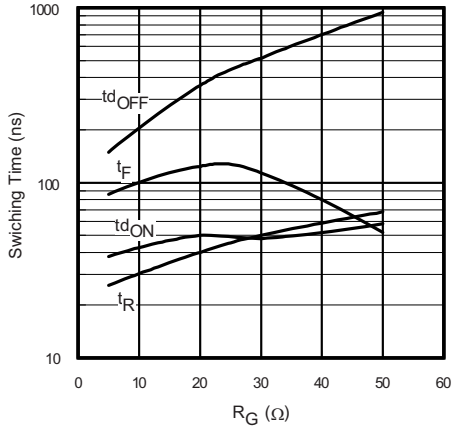

Fig. 16 - Typical Switching Time vs. R_g
T_J = 150 °C; L = 1.4 mH; V_{CE} = 400 V
I_{CE} = 5.0 A; V_{GE} = 15 V

For technical questions within your region: DiodesAmericas@vishay.com, DiodesAsia@vishay.com, DiodesEurope@vishay.com
THIS DOCUMENT IS SUBJECT TO CHANGE WITHOUT NOTICE. THE PRODUCTS DESCRIBED HEREIN AND THIS DOCUMENT ARE SUBJECT TO SPECIFIC DISCLAIMERS, SET FORTH AT www.vishay.com/doc?91000
Downloaded from Arrow.com.

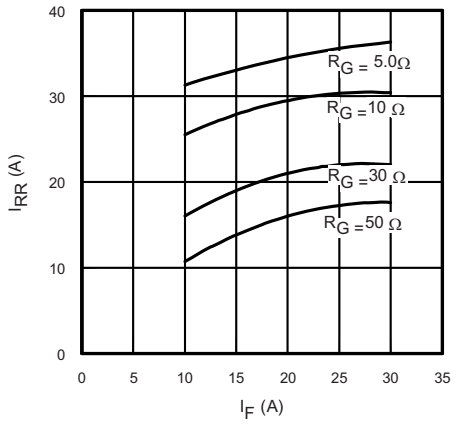

Fig. 17 - Typical Diode I_{rr} vs. I_F
T_J = 150 °C

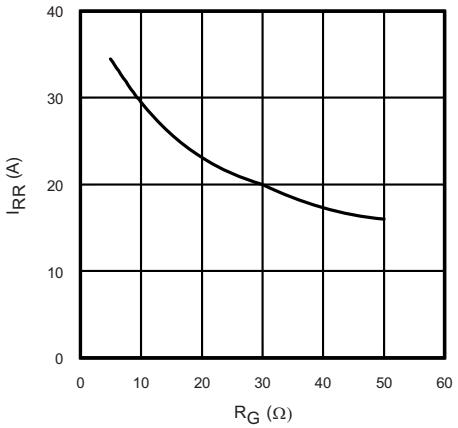

Fig. 18 - Typical Diode I_{rr} vs. R_g
T_J = 150 °C; I_F = 5.0 A

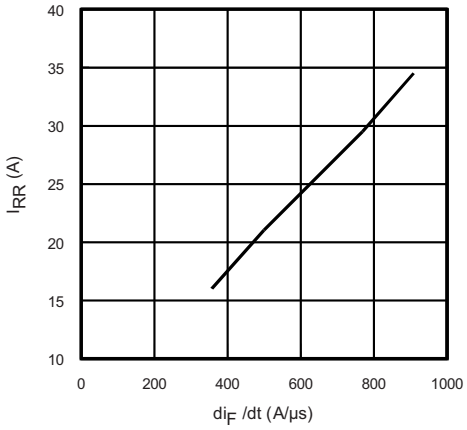

Fig. 19 - Typical Diode I_{rr} vs. dI_F/dt
V_{CC} = 400 V; V_{GE} = 15 V; I_{CE} = 5.0 A; T_J = 150 °C

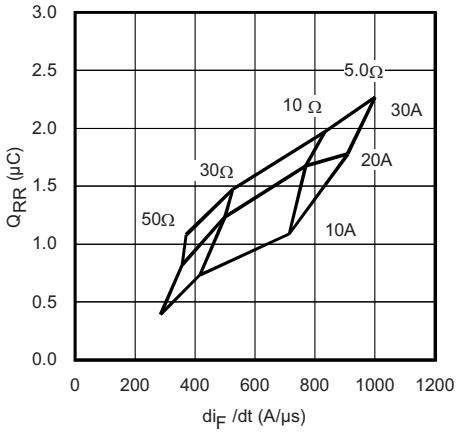

Fig. 20 - Typical Diode Q_{rr}
V_{CC} = 400 V; V_{GE} = 15 V; T_J = 150 °C

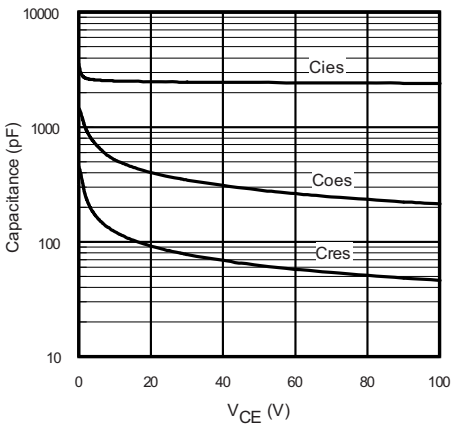

Fig. 21 - Typical Capacitance vs. V_{CE}
V_{GE} = 0 V; f = 1 MHz

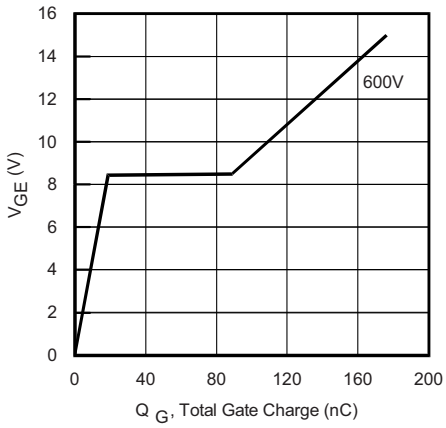

Fig. 22 - Typical Gate Charge vs. V_{GE}
I_{CE} = 5.0 A; L = 600 μH

For technical questions within your region: DiodesAmericas@vishay.com, DiodesAsia@vishay.com, DiodesEurope@vishay.com
THIS DOCUMENT IS SUBJECT TO CHANGE WITHOUT NOTICE. THE PRODUCTS DESCRIBED HEREIN AND THIS DOCUMENT ARE SUBJECT TO SPECIFIC DISCLAIMERS, SET FORTH AT www.vishay.com/doc?91000
Downloaded from Arrow.com.

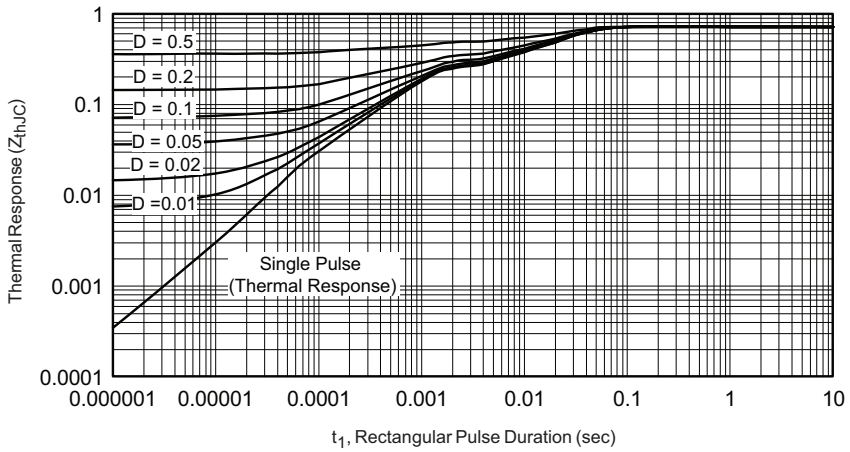

Fig. 23 - Maximum Transient Thermal Impedance, Junction-to-Case (IGBT)

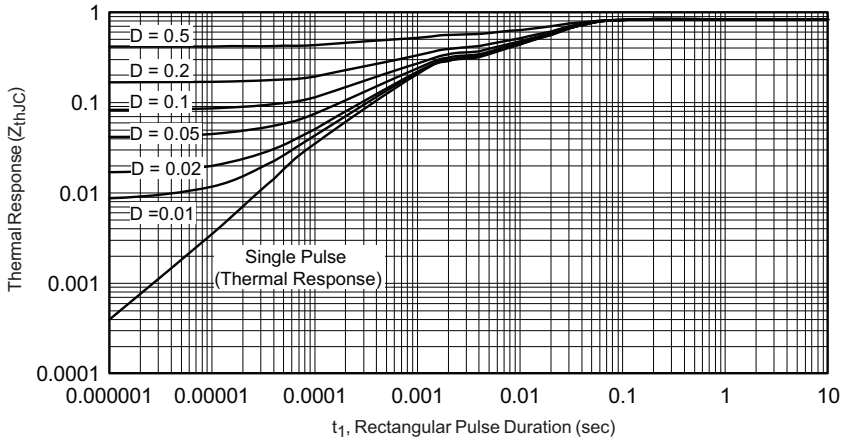

Fig. 24 - Maximum Transient Thermal Impedance, Junction-to-Case (Diode)

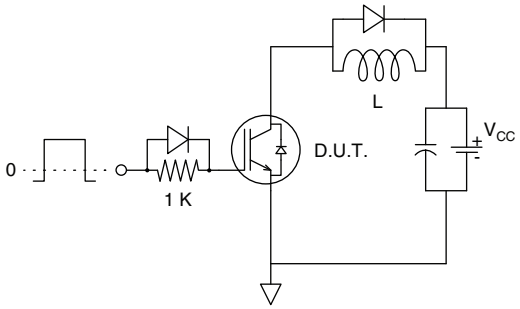

Fig. 25 - Gate Charge Circuit (Turn-Off)

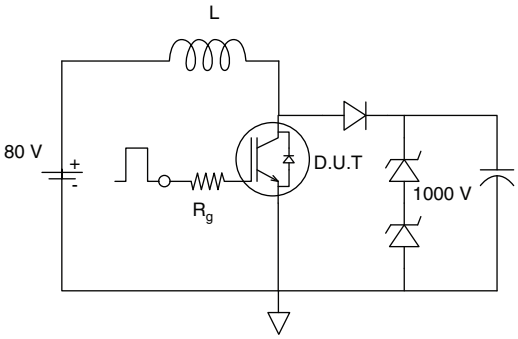

Fig. 26 - RBSOA Circuit

For technical questions within your region: DiodesAmericas@vishay.com, DiodesAsia@vishay.com, DiodesEurope@vishay.com
THIS DOCUMENT IS SUBJECT TO CHANGE WITHOUT NOTICE. THE PRODUCTS DESCRIBED HEREIN AND THIS DOCUMENT ARE SUBJECT TO SPECIFIC DISCLAIMERS, SET FORTH AT www.vishay.com/doc?91000
Downloaded from Arrow.com.

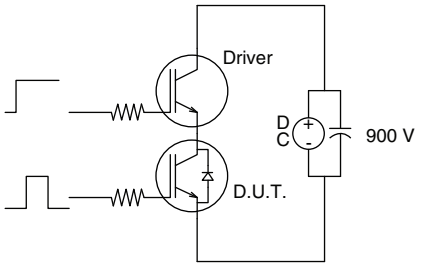

Fig. 27 - S.C. SOA Circuit

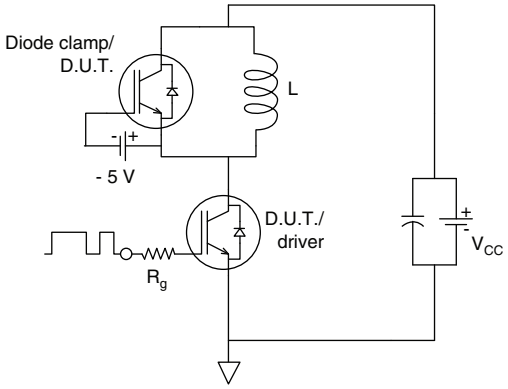

Fig. 28 - Switching Loss Circuit

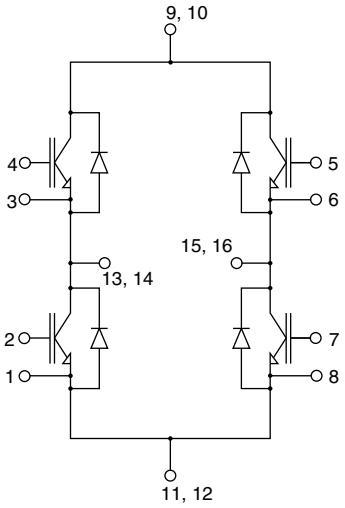

Fig. 29 - Electrical diagram

ORDERING INFORMATION TABLE

Device code	VS-	20	MT	120	U	F	A	PbF
	1	2	3	4	5	6	7	8

1	-	Vishay Semiconductors product
2	-	Current rating (20 = 20 A)
3	-	Essential part number
4	-	Voltage code (120 = 1200 V)
5	-	Speed / type (U = ultrafast IGBT)
6	-	Circuit configuration (F = full bridge)
7	-	A = Al_2O_3 DBC substrate
8	-	Lead (Pb)-free

For technical questions within your region: DiodesAmericas@vishay.com, DiodesAsia@vishay.com, DiodesEurope@vishay.com
THIS DOCUMENT IS SUBJECT TO CHANGE WITHOUT NOTICE. THE PRODUCTS DESCRIBED HEREIN AND THIS DOCUMENT ARE SUBJECT TO SPECIFIC DISCLAIMERS, SET FORTH AT www.vishay.com/doc?91000
Downloaded from Arrow.com.

CIRCUIT CONFIGURATION

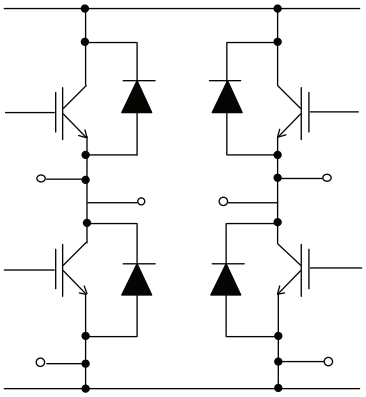

LINKS TO RELATED DOCUMENTS	
Dimensions	www.vishay.com/doc?95245

For technical questions within your region: DiodesAmericas@vishay.com, DiodesAsia@vishay.com, DiodesEurope@vishay.com
THIS DOCUMENT IS SUBJECT TO CHANGE WITHOUT NOTICE. THE PRODUCTS DESCRIBED HEREIN AND THIS DOCUMENT ARE SUBJECT TO SPECIFIC DISCLAIMERS, SET FORTH AT www.vishay.com/doc?91000
Downloaded from Arrow.com.

MTP MOSFET/IGBT Full-Bridge

DIMENSIONS in millimeters

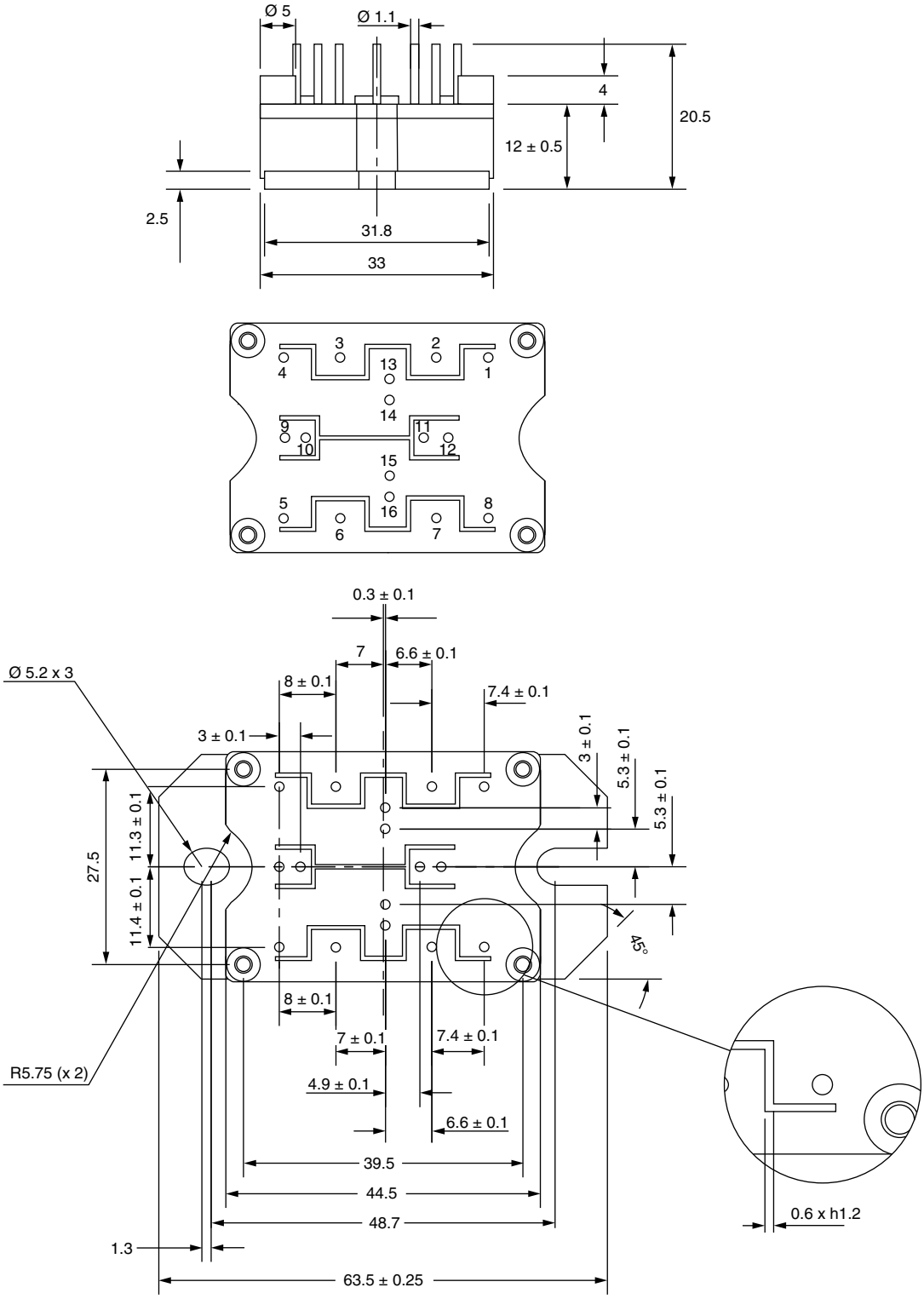

Downloaded from Arrow.com.

Disclaimer

ALL PRODUCT, PRODUCT SPECIFICATIONS AND DATA ARE SUBJECT TO CHANGE WITHOUT NOTICE TO IMPROVE RELIABILITY, FUNCTION OR DESIGN OR OTHERWISE.

Vishay Intertechnology, Inc., its affiliates, agents, and employees, and all persons acting on its or their behalf (collectively, "Vishay"), disclaim any and all liability for any errors, inaccuracies or incompleteness contained in any datasheet or in any other disclosure relating to any product.

Vishay makes no warranty, representation or guarantee regarding the suitability of the products for any particular purpose or the continuing production of any product. To the maximum extent permitted by applicable law, Vishay disclaims (i) any and all liability arising out of the application or use of any product, (ii) any and all liability, including without limitation special, consequential or incidental damages, and (iii) any and all implied warranties, including warranties of fitness for particular purpose, non-infringement and merchantability.

Statements regarding the suitability of products for certain types of applications are based on Vishay's knowledge of typical requirements that are often placed on Vishay products in generic applications. Such statements are not binding statements about the suitability of products for a particular application. It is the customer's responsibility to validate that a particular product with the properties described in the product specification is suitable for use in a particular application. Parameters provided in datasheets and / or specifications may vary in different applications and performance may vary over time. All operating parameters, including typical parameters, must be validated for each customer application by the customer's technical experts. Product specifications do not expand or otherwise modify Vishay's terms and conditions of purchase, including but not limited to the warranty expressed therein.

Except as expressly indicated in writing, Vishay products are not designed for use in medical, life-saving, or life-sustaining applications or for any other application in which the failure of the Vishay product could result in personal injury or death. Customers using or selling Vishay products not expressly indicated for use in such applications do so at their own risk. Please contact authorized Vishay personnel to obtain written terms and conditions regarding products designed for such applications.

No license, express or implied, by estoppel or otherwise, to any intellectual property rights is granted by this document or by any conduct of Vishay. Product names and markings noted herein may be trademarks of their respective owners.

© 2017 VISHAY INTERTECHNOLOGY, INC. ALL RIGHTS RESERVED

Downloaded from Arrow.com.