High Speed Infrared Emitting Diodes, 940 nm, Surface Emitter Technology

VSMY2940RG

VSMY2940G

DESCRIPTION

As part of the SurfLight™ portfolio, the VSMY2940 series are infrared, 940 nm emitting diodes based on GaAlAs surface emitter chip technology with extreme high radiant intensities, high optical power and high speed, molded in clear, untinted plastic packages (with lens) for surface mounting (SMD).

APPLICATIONS

- IrDA compatible data transmission
- Miniature light barrier
- Photointerrupters
- Optical switch
- Emitter source for proximity sensors
- IR touch panels

FEATURES

- Package type: surface mount
- Package form: GW, RGW
- Dimensions (L x W x H in mm): 2.3 x 2.3 x 2.8
- Peak wavelength: λ_p = 940 nm
- High reliability
- High radiant power
- Very high radiant intensity
- Angle of half intensity: $\varphi = \pm 10°$
- Suitable for high pulse current operation
- Terminal configurations: gullwing or reverse gullwing
- Package matches with detector VEMD2000X01 series
- Floor life: 4 weeks, MSL 2a, acc. J-STD-020
- Material categorization: for definitions of compliance please see www.vishay.com/doc?99912

Pb-free
e3
RoHS COMPLIANT
HALOGEN FREE
GREEN (5-2008)

PRODUCT SUMMARY				
COMPONENT	I_e (mW/sr)	φ (deg)	λ_P (nm)	t_r (ns)
VSMY2940RG	120	± 10	940	10
VSMY2940G	120	± 10	940	10

Note

- Test conditions see table “Basic Characteristics“

ORDERING INFORMATION			
ORDERING CODE	PACKAGING	REMARKS	PACKAGE FORM
VSMY2940RG	Tape and reel	MOQ: 6000 pcs, 6000 pcs/reel	Reverse gullwing
VSMY2940G	Tape and reel	MOQ: 6000 pcs, 6000 pcs/reel	Gullwing

Note

- MOQ: minimum order quantity

For technical questions, contact: emittertechsupport@vishay.com
THIS DOCUMENT IS SUBJECT TO CHANGE WITHOUT NOTICE. THE PRODUCTS DESCRIBED HEREIN AND THIS DOCUMENT ARE SUBJECT TO SPECIFIC DISCLAIMERS, SET FORTH AT www.vishay.com/doc?91000

ABSOLUTE MAXIMUM RATINGS (T_{amb} = 25 °C, unless otherwise specified)				
PARAMETER	**TEST CONDITION**	**SYMBOL**	**VALUE**	**UNIT**
Reverse voltage		V_R	5	V
Forward current		I_F	100	mA
Peak forward current	t_p/T = 0.5, t_p = 100 µs	I_{FM}	200	mA
Surge forward current	t_p = 100 µs	I_{FSM}	1	A
Power dissipation		P_V	190	mW
Junction temperature		T_j	100	°C
Operating temperature range		T_{amb}	-40 to +85	°C
Storage temperature range		T_{stg}	-40 to +100	°C
Soldering temperature	acc. figure 10, J-STD-020	T_{sd}	260	°C
Thermal resistance junction/ambient	J-STD-051, soldered on PCB	R_{thJA}	250	K/W

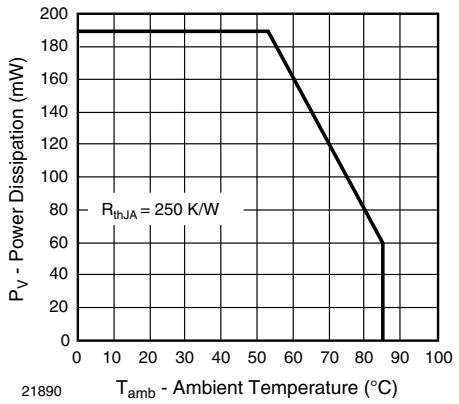

Fig. 1 - Power Dissipation Limit vs. Ambient Temperature

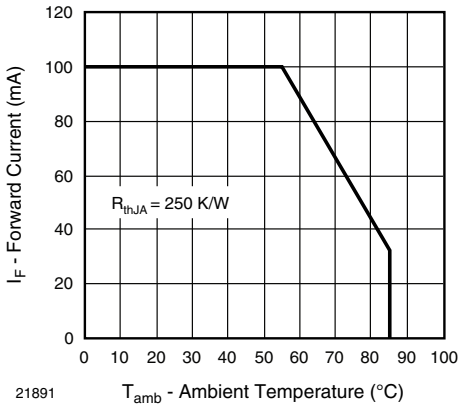

Fig. 2 - Forward Current Limit vs. Ambient Temperature

BASIC CHARACTERISTICS (T_{amb} = 25 °C, unless otherwise specified)						
PARAMETER	**TEST CONDITION**	**SYMBOL**	**MIN.**	**TYP.**	**MAX.**	**UNIT**
Forward voltage	I_F = 100 mA, t_p = 20 ms	V_F		1.55	1.9	V
	I_F = 1 A, t_p = 100 µs	V_F		2.65		V
Temperature coefficient of V_F	I_F = 100 mA	TK_{VF}		-2.1		mV/K
Reverse current		I_R	not designed for reverse operation			µA
Junction capacitance	V_R = 0 V, f = 1 MHz, E = 0 mW/cm²	C_J		125		pF
Radiant intensity	I_F = 100 mA, t_p = 20 ms	I_e	65	120	195	mW/sr
	I_F = 1 A, t_p = 100 µs	I_e		880		mW/sr
Radiant power	I_F = 100 mA, t_p = 20 ms	ϕ_e		55		mW
Temperature coefficient of radiant power	I_F = 100 mA	$TK\phi_e$		-0.2		%/K
Angle of half intensity		φ		± 10		deg
Peak wavelength	I_F = 100 mA	λ_p	920	940	960	nm
Spectral bandwidth	I_F = 30 mA	$\Delta\lambda$		40		nm
Temperature coefficient of λ_p	I_F = 30 mA	$TK\lambda_p$		0.25		nm/K
Rise time	I_F = 100 mA, 20 % to 80 %	t_r		10		ns
Fall time	I_F = 100 mA, 20 % to 80 %	t_f		10		ns

For technical questions, contact: emittertechsupport@vishay.com
THIS DOCUMENT IS SUBJECT TO CHANGE WITHOUT NOTICE. THE PRODUCTS DESCRIBED HEREIN AND THIS DOCUMENT ARE SUBJECT TO SPECIFIC DISCLAIMERS, SET FORTH AT www.vishay.com/doc?91000

BASIC CHARACTERISTICS (T_{amb} = 25 °C, unless otherwise specified)

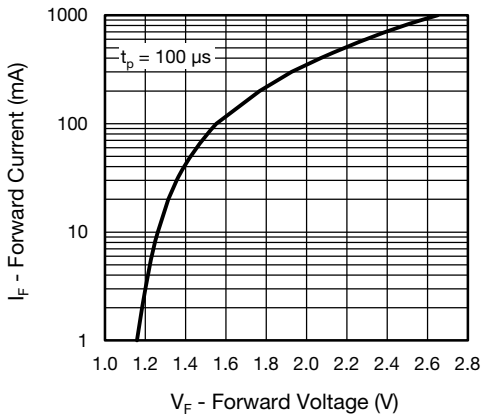

Fig. 3 - Forward Current vs. Forward Voltage

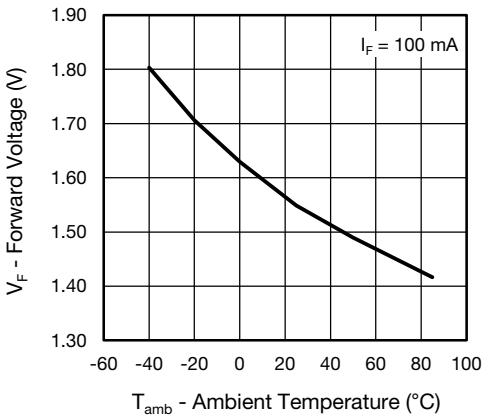

Fig. 4 - Forward Voltage vs. Ambient Temperature

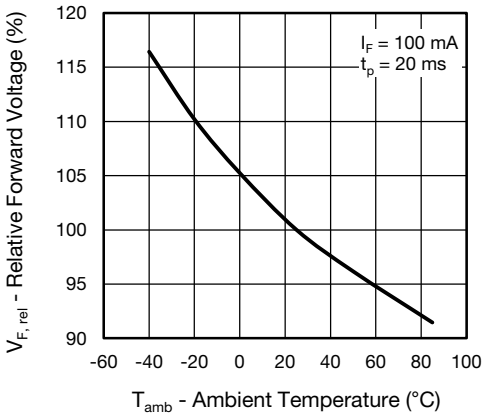

Fig. 5 - Relative Forward Voltage vs. Ambient Temperature

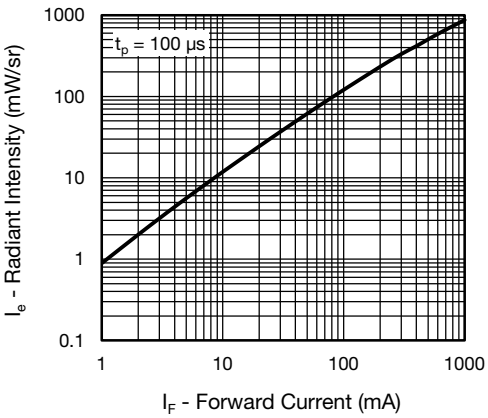

Fig. 6 - Radiant Intensity vs. Forward Current

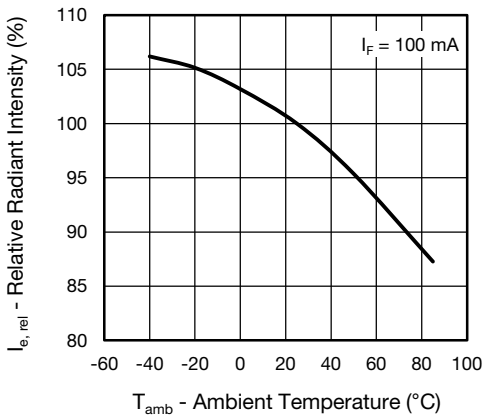

Fig. 7 - Relative Radiant Intensity vs. Ambient Temperature

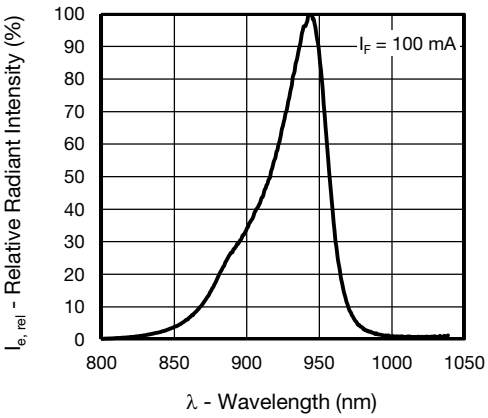

Fig. 8 - Relative Radiant Intensity vs. Wavelength

For technical questions, contact: emittertechsupport@vishay.com
THIS DOCUMENT IS SUBJECT TO CHANGE WITHOUT NOTICE. THE PRODUCTS DESCRIBED HEREIN AND THIS DOCUMENT ARE SUBJECT TO SPECIFIC DISCLAIMERS, SET FORTH AT www.vishay.com/doc?91000

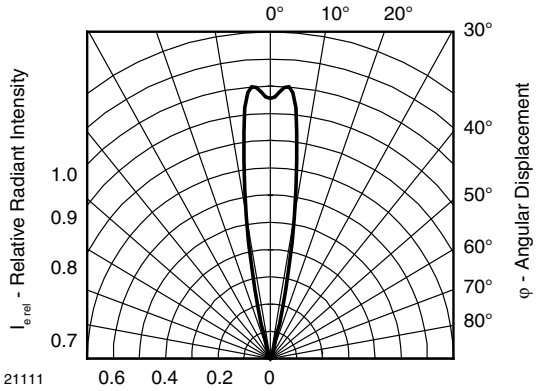

Fig. 9 - Relative Radiant Intensity vs. Angular Displacement

SOLDER PROFILE

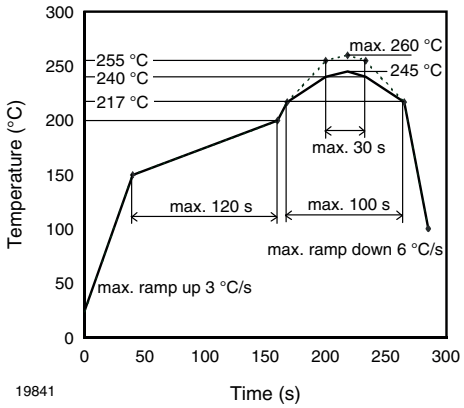

Fig. 10 - Lead (Pb)-free Reflow Solder Profile acc. J-STD-020

DRYPACK

Devices are packed in moisture barrier bags (MBB) to prevent the products from moisture absorption during transportation and storage. Each bag contains a desiccant.

FLOOR LIFE

Floor life (time between soldering and removing from MBB) must not exceed the time indicated on MBB label:
Floor life: 4 weeks
Conditions: T_{amb} < 30 °C, RH < 60 %
Moisture sensitivity level 2a, acc. to J-STD-020.

DRYING

In case of moisture absorption devices should be baked before soldering. Conditions see J-STD-020 or label. Devices taped on reel dry using recommended conditions 192 h at 40 °C (+ 5 °C), RH < 5 %.

For technical questions, contact: emittertechsupport@vishay.com
THIS DOCUMENT IS SUBJECT TO CHANGE WITHOUT NOTICE. THE PRODUCTS DESCRIBED HEREIN AND THIS DOCUMENT ARE SUBJECT TO SPECIFIC DISCLAIMERS, SET FORTH AT www.vishay.com/doc?91000

PACKAGE DIMENISONS in millimeters: **VSMY2940RG**

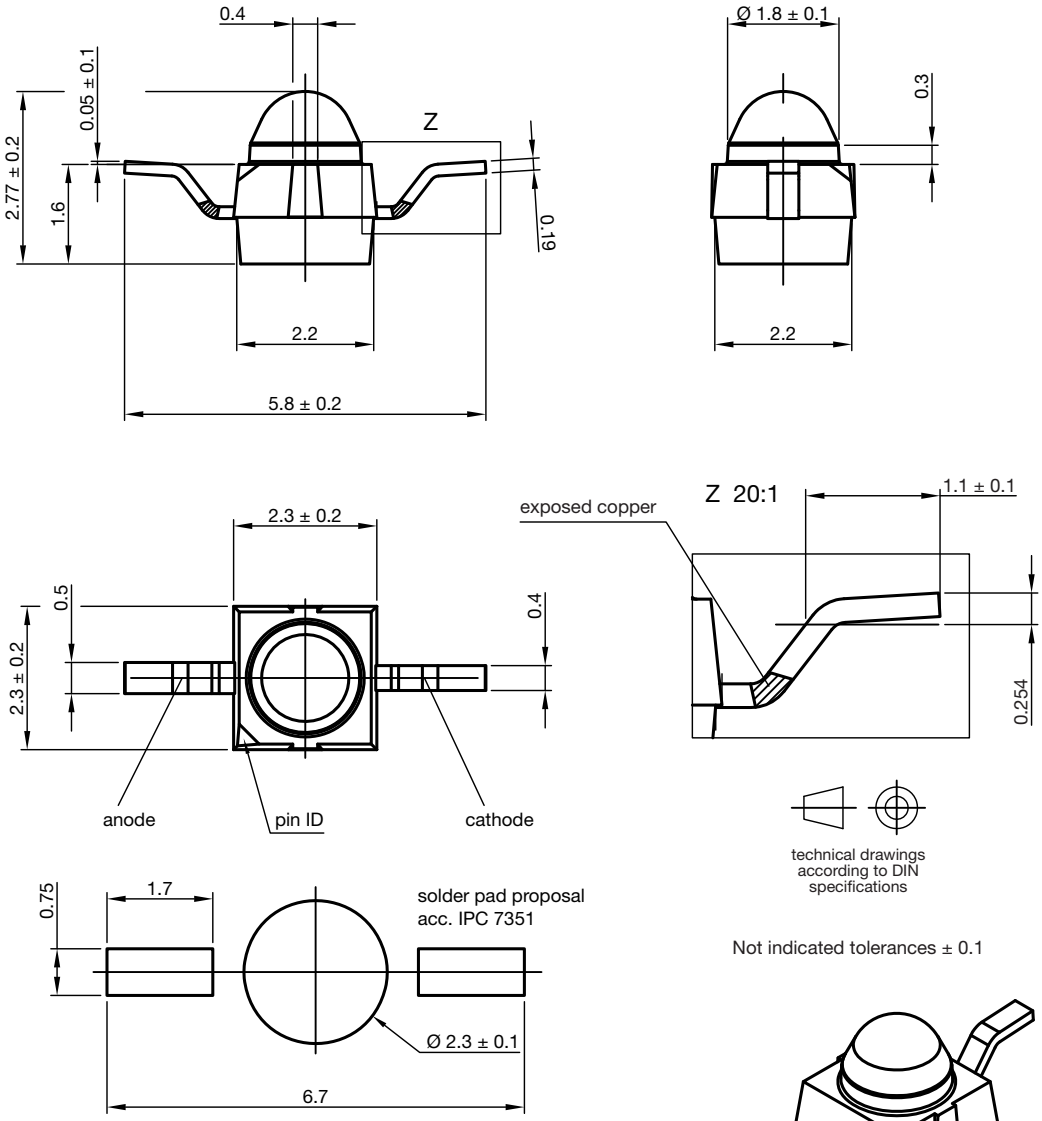

Drawing-No.: 6.544-5391.03-4
Issue: 2; 19.09.14

For technical questions, contact: emittertechsupport@vishay.com
THIS DOCUMENT IS SUBJECT TO CHANGE WITHOUT NOTICE. THE PRODUCTS DESCRIBED HEREIN AND THIS DOCUMENT ARE SUBJECT TO SPECIFIC DISCLAIMERS, SET FORTH AT www.vishay.com/doc?91000

PACKAGE DIMENSIONS in millimeters: **VSMY2940G**

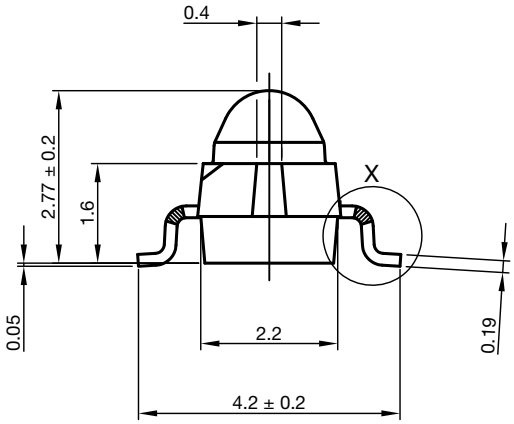

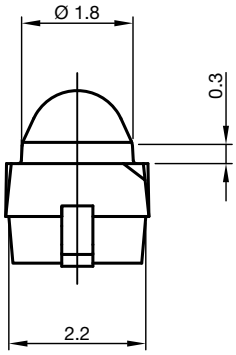

X 20:1

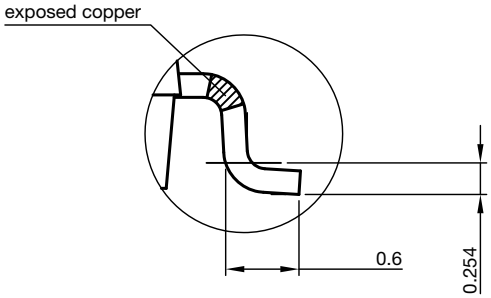

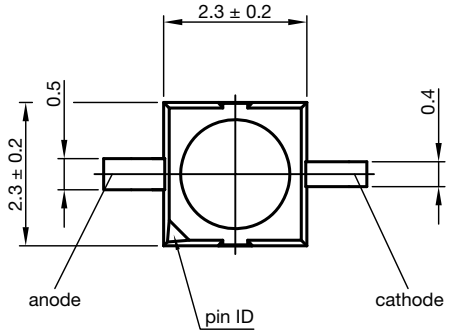

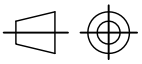

technical drawings according to DIN specifications

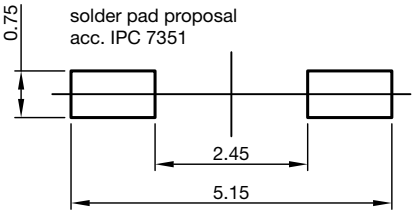

Not indicated tolerances ± 0.1

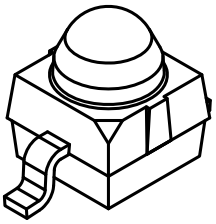

Drawing-No.: 6.544-5383.03-4
Issue: 2; 19.09.14

For technical questions, contact: emittertechsupport@vishay.com
THIS DOCUMENT IS SUBJECT TO CHANGE WITHOUT NOTICE. THE PRODUCTS DESCRIBED HEREIN AND THIS DOCUMENT ARE SUBJECT TO SPECIFIC DISCLAIMERS, SET FORTH AT www.vishay.com/doc?91000

TAPING AND REEL DIMENSIONS in millimeters: **VSMY2940RG**

Reel

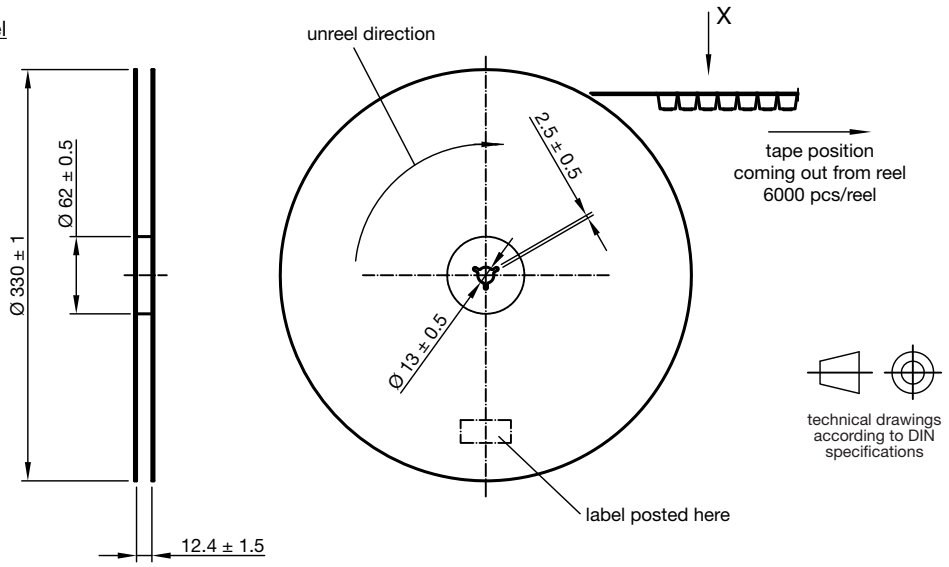

Leader and trailer tape

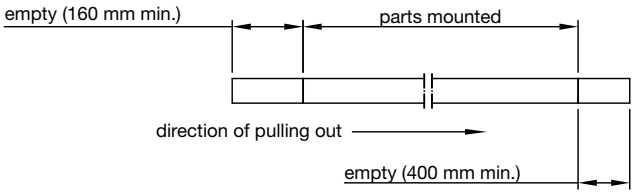

Terminal position in tape

Device	Lead I	Lead II
VEMT2000	Collector	Emitter
VEMT2500		
VEMD2000	Cathode	Anode
VEMD2500		
VSMB2000		
VSMG2000		
VSMF2890RG		
VSMY2850RG	Anode	Cathode
VSMY2940RG		

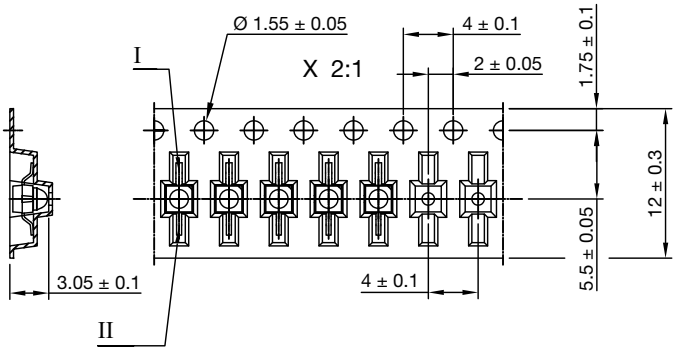

Drawing-No.: 9.800-5100.01-4
Issue: 4; 19.09.14

For technical questions, contact: emittertechsupport@vishay.com
THIS DOCUMENT IS SUBJECT TO CHANGE WITHOUT NOTICE. THE PRODUCTS DESCRIBED HEREIN AND THIS DOCUMENT ARE SUBJECT TO SPECIFIC DISCLAIMERS, SET FORTH AT www.vishay.com/doc?91000

TAPING AND REEL DIMENSIONS in millimeters: **VSMY2940G**

Reel

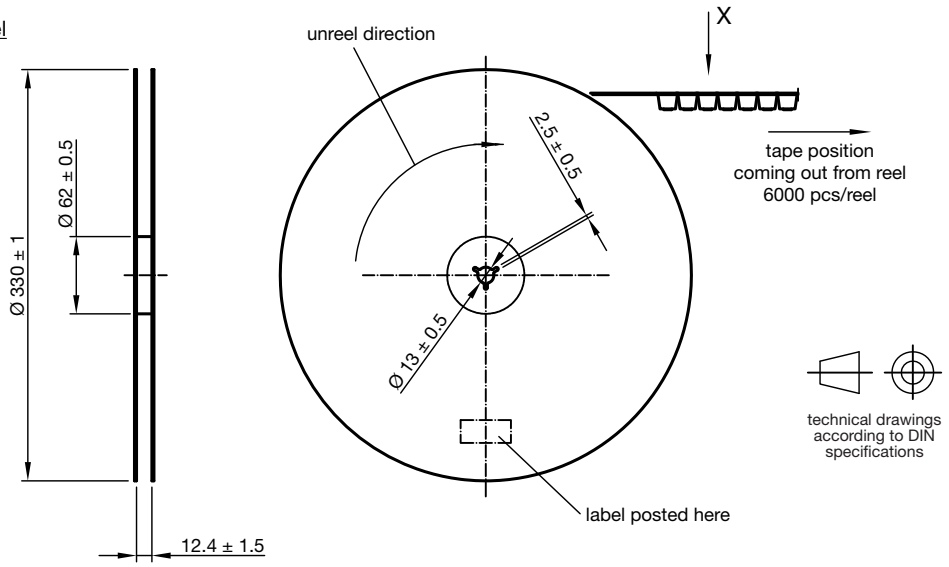

Leader and trailer tape

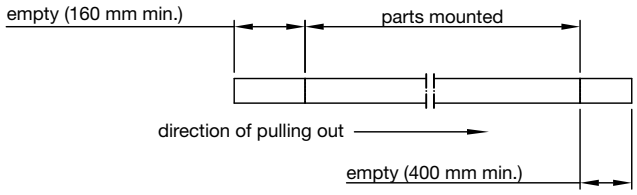

Terminal position in tape

Device	Lead I	Lead II
VSMB2020	Cathode	Anode
VSMG2020		
VEMD2020		
VEMD2520		
VSMF2890G		
VEMT2020	Collector	Emitter
VEMT2520		
VSMY2850G	Anode	Cathode
VSMY2940G		

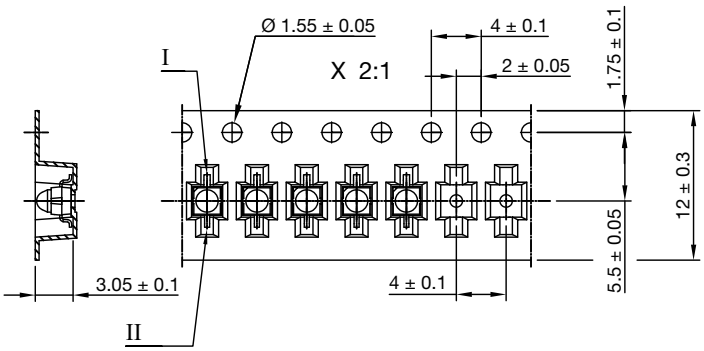

Drawing-No.: 9.800-5091.01-4
Issue: 5; 19.09.14

For technical questions, contact: emittertechsupport@vishay.com
THIS DOCUMENT IS SUBJECT TO CHANGE WITHOUT NOTICE. THE PRODUCTS DESCRIBED HEREIN AND THIS DOCUMENT ARE SUBJECT TO SPECIFIC DISCLAIMERS, SET FORTH AT www.vishay.com/doc?91000

Disclaimer

ALL PRODUCT, PRODUCT SPECIFICATIONS AND DATA ARE SUBJECT TO CHANGE WITHOUT NOTICE TO IMPROVE RELIABILITY, FUNCTION OR DESIGN OR OTHERWISE.

Vishay Intertechnology, Inc., its affiliates, agents, and employees, and all persons acting on its or their behalf (collectively, "Vishay"), disclaim any and all liability for any errors, inaccuracies or incompleteness contained in any datasheet or in any other disclosure relating to any product.

Vishay makes no warranty, representation or guarantee regarding the suitability of the products for any particular purpose or the continuing production of any product. To the maximum extent permitted by applicable law, Vishay disclaims (i) any and all liability arising out of the application or use of any product, (ii) any and all liability, including without limitation special, consequential or incidental damages, and (iii) any and all implied warranties, including warranties of fitness for particular purpose, non-infringement and merchantability.

Statements regarding the suitability of products for certain types of applications are based on Vishay's knowledge of typical requirements that are often placed on Vishay products in generic applications. Such statements are not binding statements about the suitability of products for a particular application. It is the customer's responsibility to validate that a particular product with the properties described in the product specification is suitable for use in a particular application. Parameters provided in datasheets and / or specifications may vary in different applications and performance may vary over time. All operating parameters, including typical parameters, must be validated for each customer application by the customer's technical experts. Product specifications do not expand or otherwise modify Vishay's terms and conditions of purchase, including but not limited to the warranty expressed therein.

Except as expressly indicated in writing, Vishay products are not designed for use in medical, life-saving, or life-sustaining applications or for any other application in which the failure of the Vishay product could result in personal injury or death. Customers using or selling Vishay products not expressly indicated for use in such applications do so at their own risk. Please contact authorized Vishay personnel to obtain written terms and conditions regarding products designed for such applications.

No license, express or implied, by estoppel or otherwise, to any intellectual property rights is granted by this document or by any conduct of Vishay. Product names and markings noted herein may be trademarks of their respective owners.

© 2017 VISHAY INTERTECHNOLOGY, INC. ALL RIGHTS RESERVED