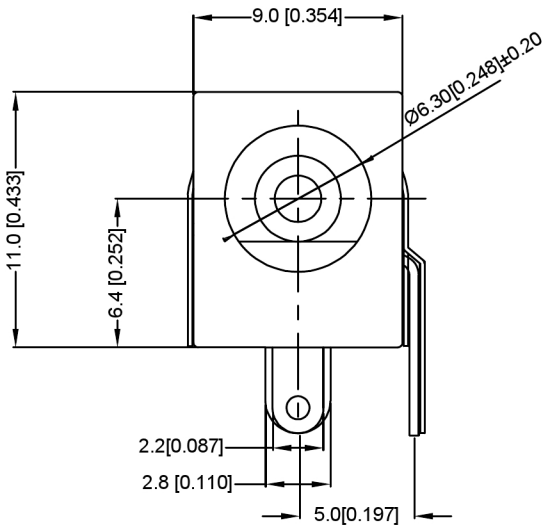

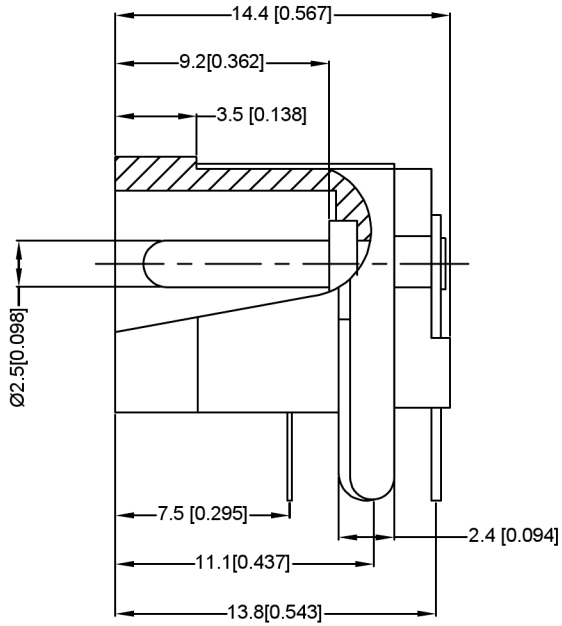

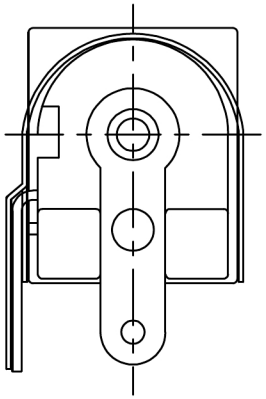

SCHEMATIC	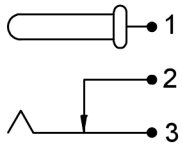

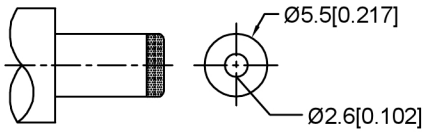

MATING PLUG
Jack Insertion Depth: 9.0 mm

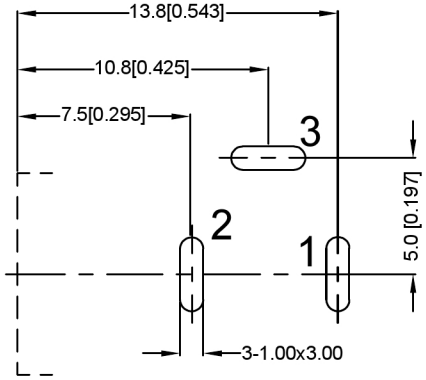

Pin Hole Layout
Jack Bottom View

	MATERIAL	PLATING
center pin	Brass	silver
terminal 1	Brass	silver
terminal 2	Phosphor Bronze	silver
terminal 3	Brass	silver
plastic	Pbt	
shield	Sus	nickel

广东星坤科技股份有限公司
文件工程章

MARK	DESCRIPTION	DATE	REVISED	APPROVED
Δx		日		
Δx		期		
Δx				

REVISIONS

www.helloxkb.com www.helloxkb.com www.xk-dg.cn

UNSPECIFIED TOLERANCES	
ANGLAR	±5°
L≤ 4	±0.2
4<L≤ 16	±0.3
16<L≤ 63	±0.4
L> 63	±0.5

XKB INDUSTRIAL PRECISION CO.,LIMITED

DSND		SCALE: N/A	MODEL TYPE: DC POWER JACK
DWN		VIEW:	PART NO.: DC-005K-5A-2.5
CHKD		UNIT: mm/in	DWG NO.:
APPD		SIZE: A4	

WEIGHT	SHEET	REVISIC
	1/1	A0