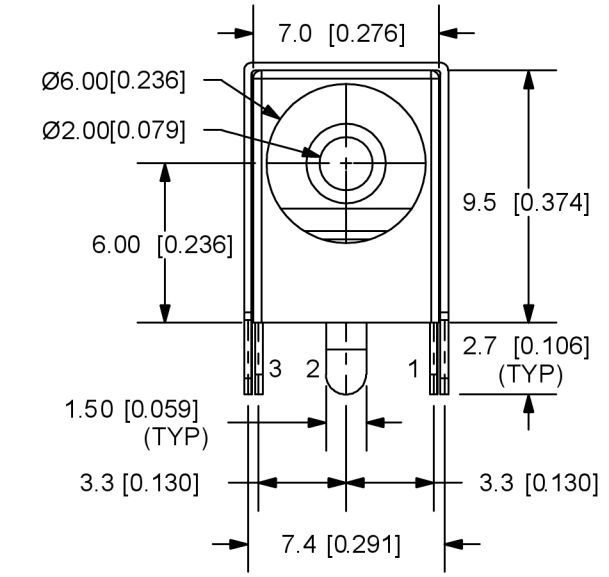


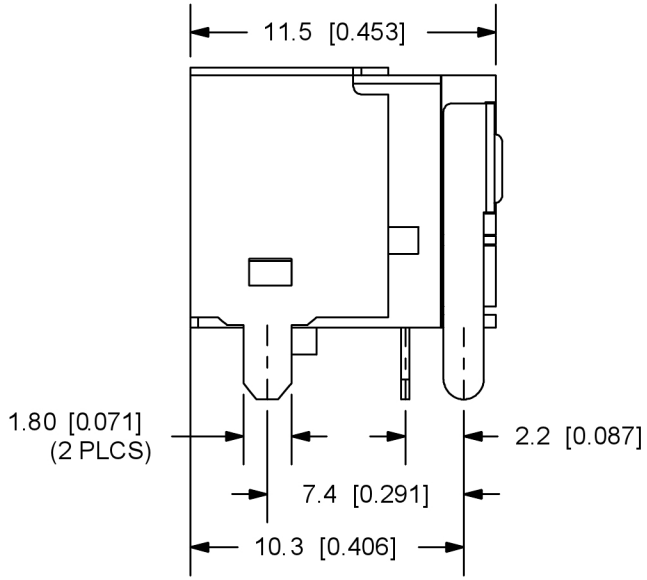


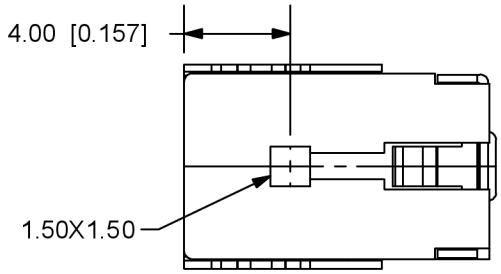


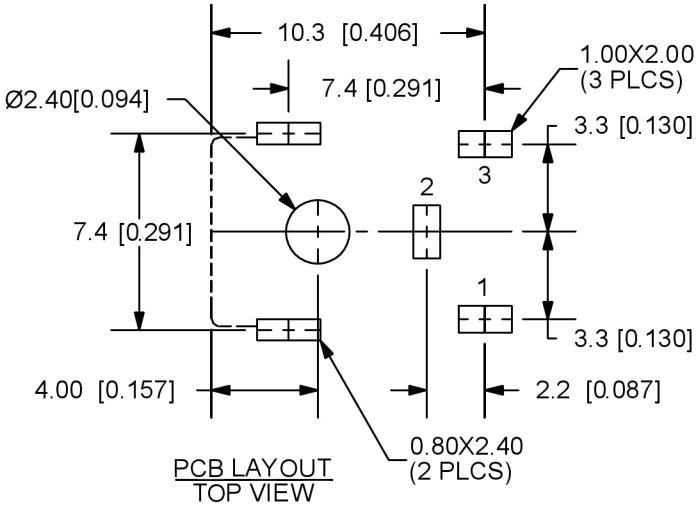


PCB LAYOUT
TOP VIEW

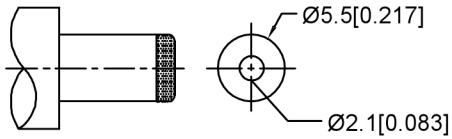


MATING PLUG
Jack Insertion Depth: 8.3 mm

| | |
|---|---|
| SCHEMATIC | 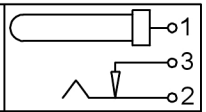 |
| Model | DC-036A-2.5A |
| Center Pin | Ø2.0 mm |
| | Ø2.5 mm |

| | MATERIAL | PLATING |
|---|---|---|
| axis support | Brass | tin |
| center pin | Brass | tin |
| plastic | Pbt | |
| terminal 1 | Brass | tin |
| terminal 2 | Phosphor Bronze | tin |
| terminal 3 | Brass | tin |

广东星坤科技股份有限公司
文件工程章

| MARK | DESCRIPTION | DATE | REVISED | APPROVED |
|---|---|---|---|---|
| Δx | | | | |
| Δx | | | | |
| Δx | | | | |

REVISIONS

| UNSPECIFIED TOLERANCES | |
|---|---|
| ANGLAR | ±5° |
| L≤ 4 | ±0.2 |
| 4<L≤ 16 | ±0.3 |
| 16<L≤ 63 | ±0.4 |
| L> 63 | ±0.5 |

www.helloxkb.com www.helloxkb.cn www.xk-dg.cn

XKB INDUSTRIAL PRECISION CO.,LIMITED

| | | | |
|---|---|---|---|
| DSND | | SCALE: N/A | MODEL TYPE: DC POWER JACK |
| DWN | | VIEW: | PART NO.: DC-036A-2.5A-2.0 |
| CHKD | | UNIT: mm/in | DWG NO.: |
| APPD | | SIZE: A4 | |

| WEIGHT | SHEET | REVISIC |
|---|---|---|
| | 1/1 | A0 |