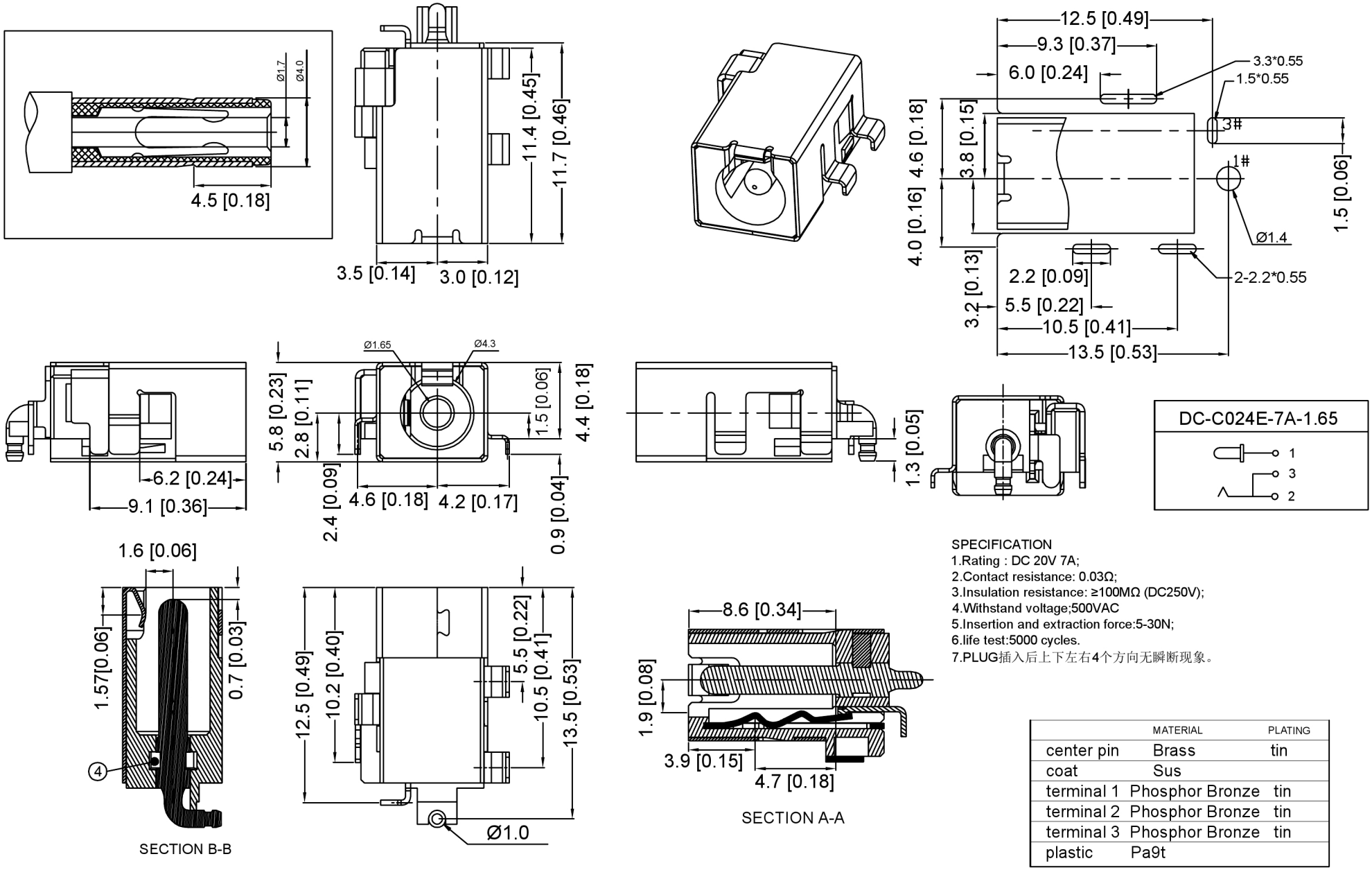

SPECIFICATION
1.Rating : DC 20V 7A;
2.Contact resistance: 0.03Ω;
3.Insulation resistance: ≥100MΩ (DC250V);
4.Withstand voltage;500VAC
5.Insertion and extraction force:5-30N;
6.life test:5000 cycles.
7.PLUG插入后上下左右4个方向无瞬断现象。

	MATERIAL	PLATING
center pin	Brass	tin
coat	Sus	
terminal 1	Phosphor Bronze	tin
terminal 2	Phosphor Bronze	tin
terminal 3	Phosphor Bronze	tin
plastic	Pa9t	

广东星坤科技股份有限公司
文件工程章

MARK	DESCRIPTION	DATE	REVISED	APPROVED
△X				
△X				
△X				

REVISIONS

UNSPECIFIED TOLERANCES	
ANGLAR	±5°
L≤ 4	±0.2
4<L≤ 16	±0.3
16<L≤ 63	±0.4
L> 63	±0.5

www.helloxkb.com www.helloxkb.cn www.xk-dg.cn

XKB INDUSTRIAL PRECISION CO.,LIMITED

DSND		SCALE: N/A	MODEL TYPE: DC POWER JACK
DWN		VIEW:	PART NO.: DC-C024E-7A-1.65
CHKD		UNIT: mm/in	DWG NO.:
APPD		SIZE: A4	

WEIGHT	SHEET	REVISION
	1/1	A0