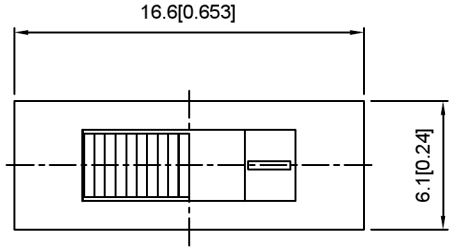

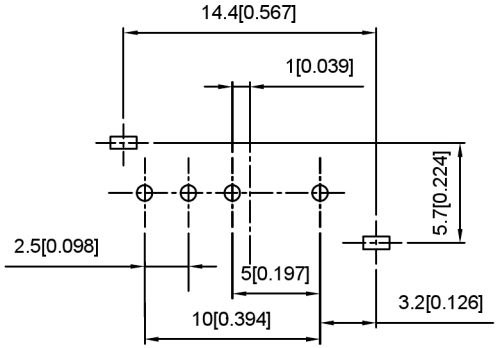

PCB LAYOUT
BOTTOM VIEW

SS13E05- X

L(MM)
2 ~10

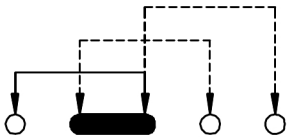

SCHEMATIC

RATING	0.3A 50V DC
CIRCUIT	1P4T
CONTACT RESISITANCE	100MΩ MAX
TRAVEL	2.5MM
OPERATING FORCE	250±100gf
OPERATING LIFE	10000

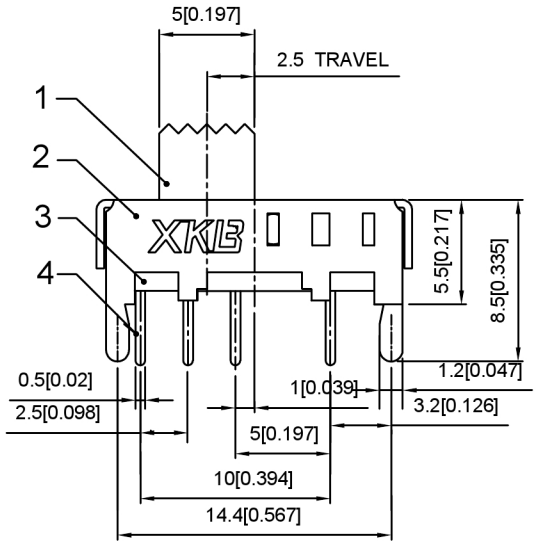

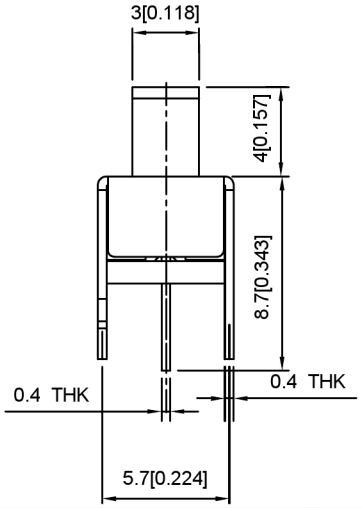

ITEM	PAPT NAME	TER,NO	QTY	MATERIAL	FINISHING	REMARK
④	Terminal	——	4	Brass（0.30t）	ag Plated	——
③	Base	——	1	Phenolic Resin		——
②	Cover	——	1	Sus	Natural	——
①	Keystake	——	1	Pa66	Black	——

广东星坤科技股份有限公司
文件工程章

MARK	DESCRIPTION	DATE	REVISED	APPROVED
Δx				
Δx				
Δx				

REVISIONS

UNSPECIFIED TOLERANCES	
ANGLAR	±5°
L≤ 4	±0.2
4<L≤ 16	±0.3
16<L≤ 63	±0.4
L> 63	±0.5

www.helloxkb.com www.helloxkb.cn www.xk-dg.cn

XKB INDUSTRIAL PRECISION CO.,LIMITED

DSND		SCALE: N/A	MODEL TYPE: SLIDE SWITCH
DWN		VIEW:	PART NO.: SS13E05
CHKD		UNIT: mm/in	DWG NO.:
APPD		SIZE: A4	

WEIGHT	SHEET	REVISIC
	1/1	A0