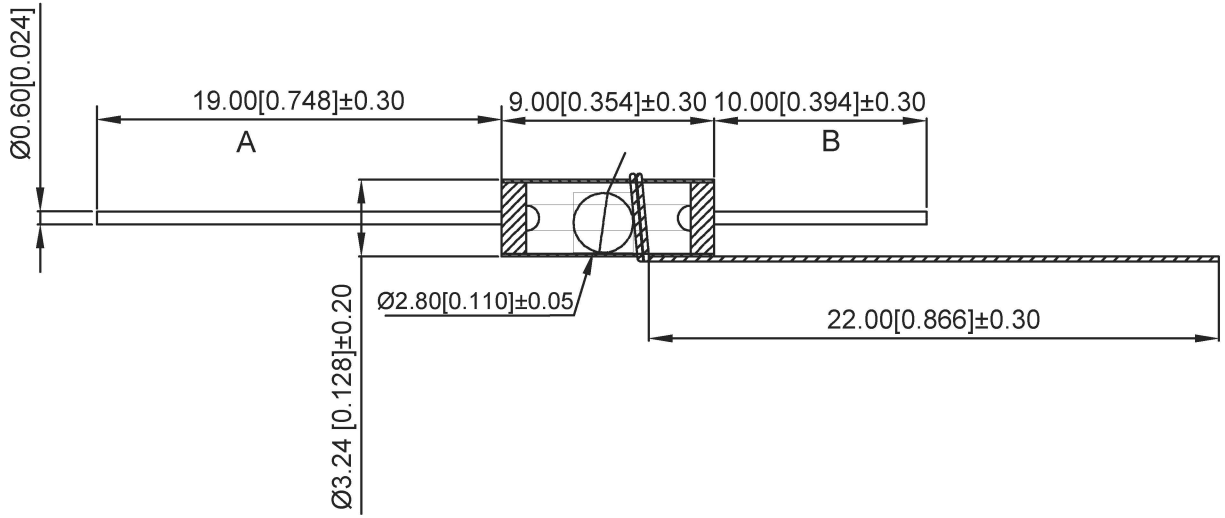

XKB Product features

Voltage: < 12V
Current: < 20mA
Conduction time: 2ms
Closed circuit resistance: < 10m ohm
Open circuit resistance: > 10m ohm
High temperature resistance: 120 degrees
Terminal tension: 500gf / min
Humidity: 25~95%RH
Operating life: 100000 times

XKB Product features
XKB产品特性
1. SW-200 is a single ball type dual pass tilt sensing trigger switch.
1.SW-200是一个单球型双程倾斜感应触发开关。
2. When the guide end (no pin end) of the product is tilted and the tilt angle is greater than 10 degrees, the product is in the open circuit, (off) state. When the horizontal state of the product is tilted, the trigger end (gold-plated pin end) is lower than the horizontal and the tilt angle is greater than 10 degrees, the product is in the closed circuit, (on) state.
2.当产品导向端（无销端）倾斜且倾斜角度大于10度时，产品处于开路、（关）状态。当产品水平状态倾斜，触发端（镀金销端）低于水平且倾斜角度大于10度时，产品处于闭路、（开）状态。
3. When it is placed horizontally, shaking is easy to trigger; when there is no foot down, shaking is not easy to trigger.
3.水平放置时，易引发震动；没有脚的时候，不容易引起摇晃。
4. The product of this specification is completely sealed, waterproof and dustproof.
4.本规范产品完全密封、防水、防尘。
5. Under normal conditions, the service life of the switch can reach 100000 times.
5.正常情况下，开关使用寿命可达10万次。
6. This product is made of environment-friendly metal material with stable performance. XKB
6、本产品采用环保型金属材料，性能稳定。

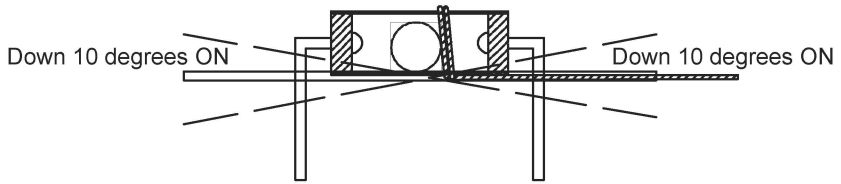

ITEM	PAPT NAMF	QTY	MATERIAL	FINISHING	REMARK
⑦	Heat shrinkable tube	1	PET		———
⑥	Rubber stopper	1	PLC		———
⑤	Spring	1	Phosphor copper	Tinning	———
④	Ball	1	Brass	Plate with silver	———
③	Guide pin A	1	Brass	Gold-plated	———
②	Guide pin B	1	Brass	Gold-plated	———
①	Steel pipe	1	Brass	Plate with nickel	———

广东星坤科技股份有限公司
生效日期
文件工程章

MARK	DESCRIPTION	DATE	REVISED	APPROVED
ΔX				
ΔX				
ΔX				

REVISIONS

UNSPECIFIED TOLERANCES	
units:	mm
tolerance:	
X.X	±0.2mm
X.XX	±0.1mm
X.XXX	±0.05mm

www.xk-dg.cn www.helloxkb.com www.helloxkb.cn

DSND		DATE		SCALE: N/A	MODEL TYPE: Ball switch
DWN		DATE		VIEW:	PART NO.:
CHKD		DATE		UNIT: mm/in	DWG NO.: SW-200CS-19G10G
APPD		DATE		SIZE: A4	

XKB INDUSTRIAL PRECISION CO.,LIMITED

WEIGHT	SHEET	REVISION
1.0g	1/1	A0