650 Watts

MHP650 Series

- Medical Safety Approvals
- Top Fan & U Channel Options
- -20 °C to +70 °C Operation
- AC OK, Remote On/Off and Active Current Share
- Screw Terminals
- Load Dependant Variable Speed Fan
- 3 Year Warranty

Specification

Input

Input Voltage	• 80-264 VAC, derate output power 10% <90 VAC and 20% <85 VAC
Input Frequency	• 47-63 Hz
Input Current	• 6.5 A at 115 VAC typical 3.2 A at 230 VAC with 650 W load
Inrush Current	• 40 A max at 264 VAC
Power Factor	• EN61000-3-2 class A compliant
Earth Leakage Current	• 250 µA max 264 VAC 60 Hz
Input Protection	• T 16 A / 250 V internal fuse in line and neutral

Output

Output Voltage	• 12-48 VDC (see tables)
Output Voltage Trim	• ±10% V1
Initial Set Accuracy	• ±1% V1, ±5% V3
Minimum Load	• No minimum load required
Start Up Delay	• 500 ms max
Start Up Rise Time	• 50 ms typical
Hold Up Time	• 20 ms minimum
Drift	• ±0.2% after 20 min warm up
Line Regulation	• ±0.5% maximum
Load Regulation	• ±1% V1, ±5% V3
Transient Response	• 4% max. deviation, recovery to within 1% in 500 µs for a 50-75-50% load change
Ripple & Noise	• 1% pk-pk V1, 20 MHz bandwidth
Overvoltage Protection	• 115-145% Vnom, recycle input to reset
Overcurrent Protection	• Constant current characteristics
Overtemperature Protection	• Auto reset
Overload Protection	• 110-140%, V1 only
Short Circuit Protection	• Auto recovery
Temperature Coefficient	• 0.05% / °C
Remote Sense	• Compensates for 0.5 V total voltage drop
Remote On/Off	• Uncommitted isolated optocoupler diode, powered diode inhibits V1 & V2 fan supply
Current Share	• Single wire current share

General

Efficiency	• 86% typical
Isolation	• 4000 VAC input to output, 1500 VAC input to ground, 500 VDC output to ground
Switching Frequency	• PFC 70 KHz, main converter 200 KHz
Power Density	• 8.2 W/in^3
Signals	• AC OK, remote on/off, current share
MTBF	• 260 KHrs to MIL-HDBK-217 at 25 °C, GB

Environmental

Operating Temperature	• -20 °C to +70 °C, derate linearly from +50 °C at 2.5% / °C to 50% load at +70 °C
Cooling	• Forced cooled, '-TF' & '-EF' models have integral dual voltage level fan, which is load dependant, U Channel requires 5.5 m/s minimum airflow,
Operating Humidity	• 95% RH, non-condensing
Storage Temperature	• -40 °C to +85 °C
Operating Altitude	• 3000 m
Shock	• 30 g pk, half sine, 6 axes
Vibration	• 2 g rms, 5 Hz to 500 kHz, 3 axes

EMC & Safety

Emissions	• EN55022 level B conducted EN55022 level A radiated
Harmonic Currents	• EN61000-3-2, class A
Voltage Flicker	• EN61000-3-3
Radiated Immunity	• EN61000-4-3, level 3 Perf Criteria A
EFT/Burst	• EN61000-4-4, level 3 Perf Criteria A
Surge	• EN61000-4-5, installation class 3, Perf Criteria A
Conducted Immunity	• EN61000-4-6, level 3, Perf Criteria A
Dips & Interruptions	• EN61000-4-11, 30% 10 ms, 60% 100 ms, 100% 5000 ms, Perf Criteria A, B, B EN60601-1-2, 30% 500 ms, 60% 100 ms, 100% 10 ms, 100% 5000 ms, Perf Criteria A, A, A, B - 230 VAC. Consult longform datasheet for 115 V operation.
Safety Approvals	• IEC60601-1 CB report, CSA 22.2 No. 60601-1, UL60601-1, TUV, EN60601-1

Models and Ratings

Output Voltage V1	Max Output Current V1	Fan Supply V2[4]	Standby Supply V3	Max Output Power[3]	Model Number[1,2]
12 V	50 A	12 V / 0.5 A	5 V / 0.2 A	607 W	MHP650PS12-EF
15 V	40 A	12 V / 0.5 A	5 V / 0.2 A	607 W	MHP650PS15-EF
24 V	27 A	12 V / 0.5 A	5 V / 0.2 A	657 W	MHP650PS24-EF
28 V	23 A	12 V / 0.5 A	5 V / 0.2 A	651 W	MHP650PS28-EF
36 V	18 A	12 V / 0.5 A	5 V / 0.2 A	657 W	MHP650PS36-EF
48 V	13.5 A	12 V / 0.5 A	5 V / 0.2 A	657 W	MHP650PS48-EF

Notes

1. For top fan version replace '-EF' in model number with '-TF'.
2. For U Channel version remove suffix.
3. U Channel models require a minimum of 5.5 m/s airflow from the system.
4. Not available for '-TF' and '-EF' models as used by integral fan.

Mechanical Details

End Fan

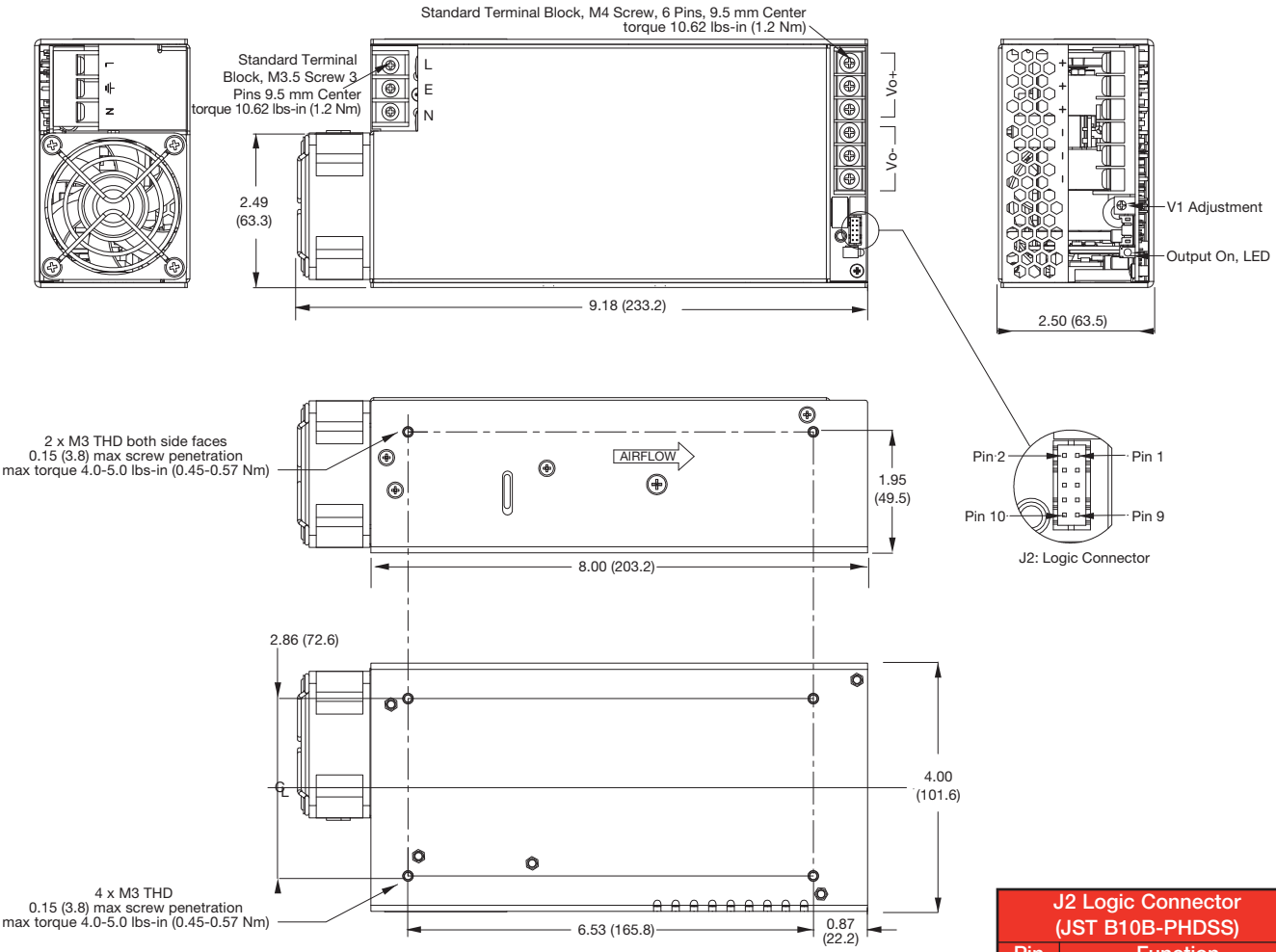

J2 Logic Connector (JST B10B-PHDSS)	
Pin	Function
1	+ Sense
2	- Sense
3	AC OK/Power Fail
4	- Sense
5	Current Share
6	Current Share
7	+ Inhibit (Anode)
8	- Inhibit (Cathode)
9	+5 V Standby (V3)
10	5 V Standby Return (V3)

Notes

1. Dimensions shown in inches (mm).
2. Weight: 2.8 lb (1.25 kg).
3. J2 Mating plug: JST part no. PHDR-10VS, contact: 26-22 AWG JST part no. SPHD-001T-P0.5.

Mechanical Details

Top Fan (Suffix - TF)

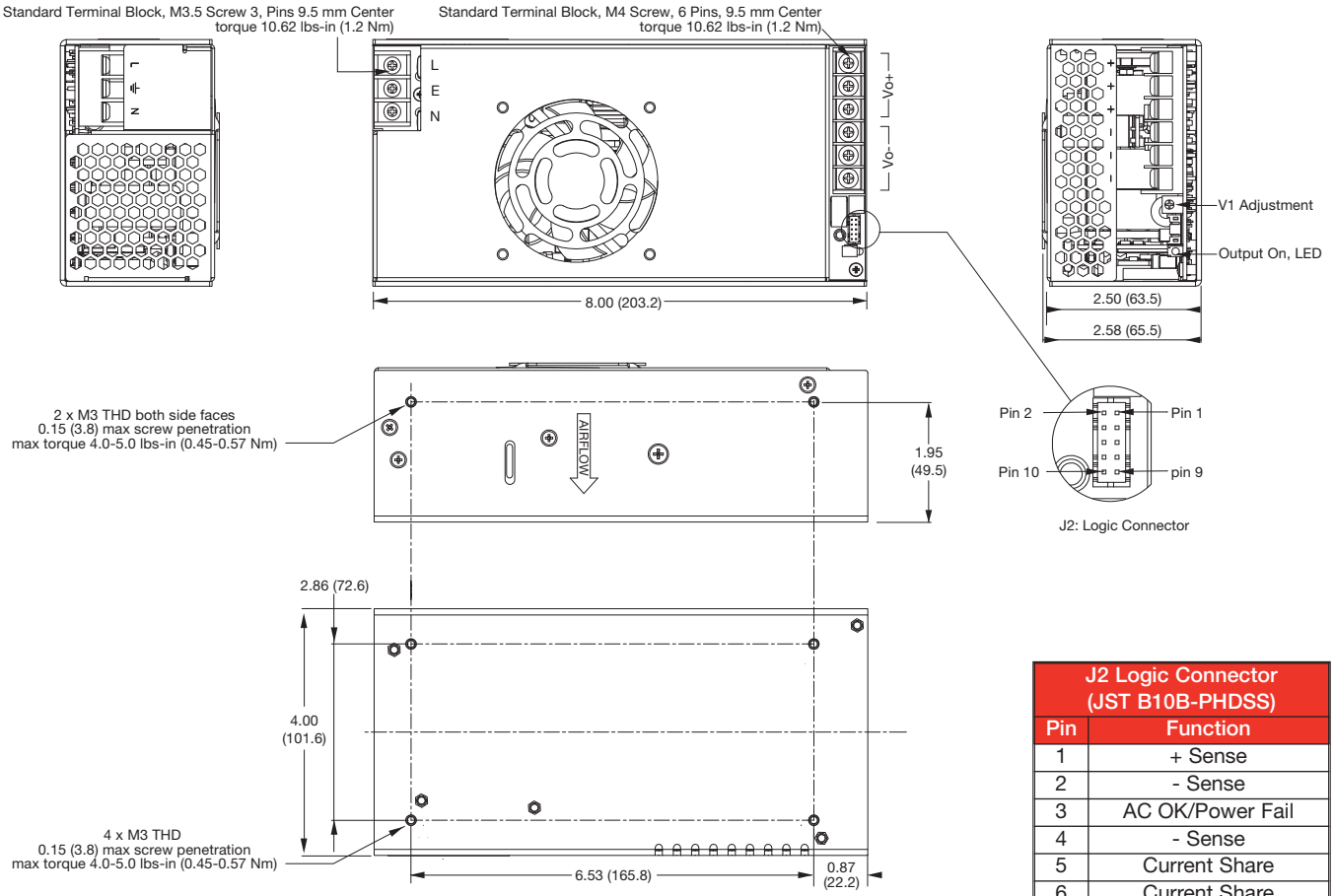

J2 Logic Connector (JST B10B-PHDSS)	
Pin	Function
1	+ Sense
2	- Sense
3	AC OK/Power Fail
4	- Sense
5	Current Share
6	Current Share
7	+ Inhibit (Anode)
8	- Inhibit (Cathode)
9	+5 V Standby (V3)
10	5 V Standby Return (V3)

Notes

1. Dimensions shown in inches (mm).
2. Weight: 2.6 lb (1.2 kg).
3. J2 Mating plug: JST part no. PHDR-10VS, contact: 26-22 AWG JST part no. SPHD-001T-P0.5.

Signals

AC OK/Power Fail

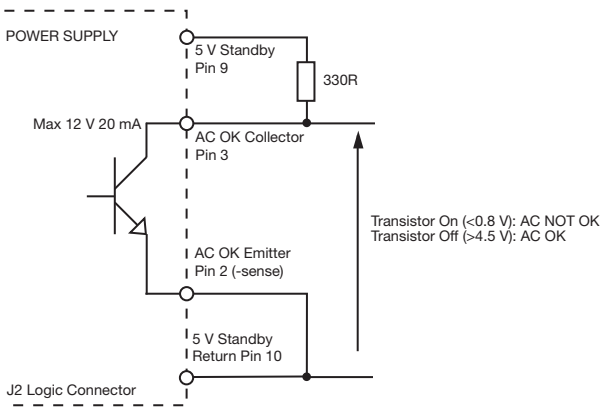

Remote On/Off (Inhibit)

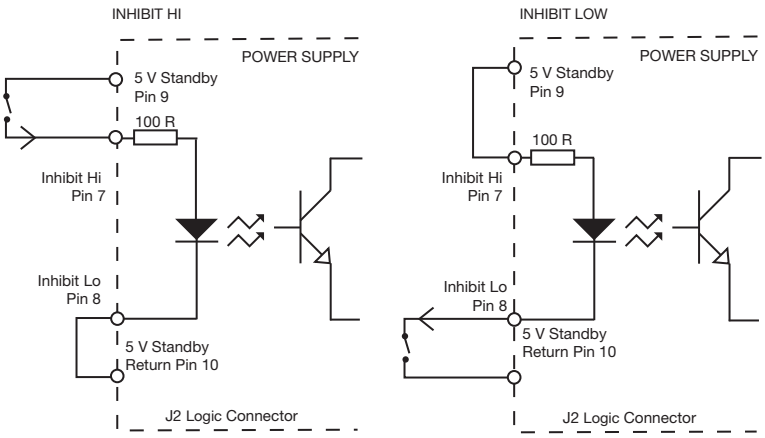

Mechanical Details

U Channel (No Suffix)

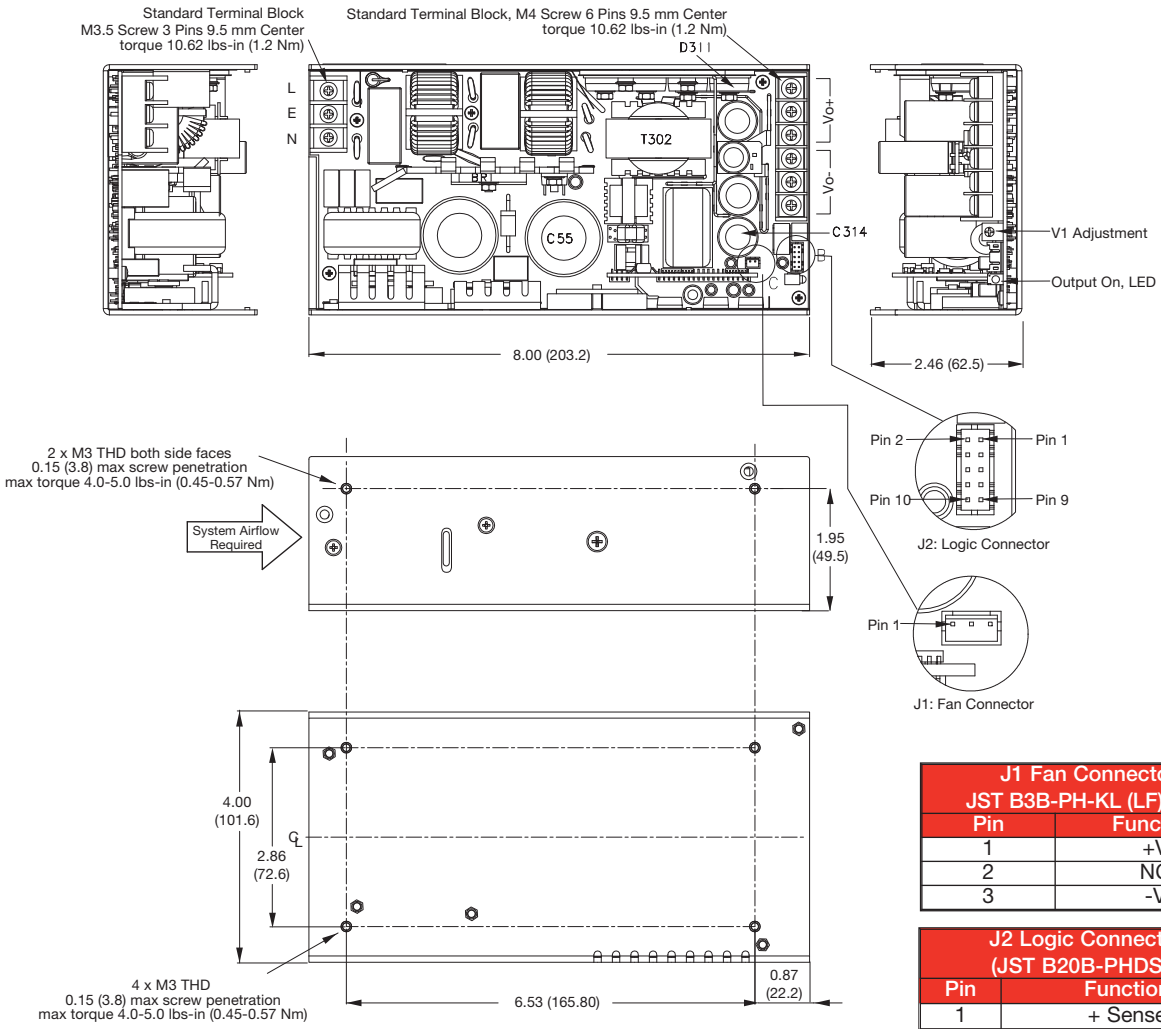

J1 Fan Connector JST B3B-PH-KL (LF) (SN)	
Pin	Function
1	+V
2	NC
3	-V

J2 Logic Connector (JST B20B-PHDSS)	
Pin	Function
1	+ Sense
2	- Sense
3	AC OK/Power Fail
4	- Sense
5	Current Share
6	Current Share
7	+ Inhibit
8	- Inhibit
9	+5 V Standby (V3)
10	5 V Standby Return (V3)

Notes

1. Dimensions shown in inches (mm).
2. Weight: 2.4 lb (1.1 kg).
3. Requires system airflow, see thermal considerations.
4. J1 Mating plug: JST part no. PHR-2, contact: JST part no. SPH-002T-P0.5S.
5. J2 Mating plug: JST part no. PHDR-10VS, contact: 26-22 AWG JST part no. SPHD-001T-P0.5.

Thermal Considerations (U Channel)

In order to ensure reliable operation in the end use application the recommended component temperatures listed should not be exceeded. Higher temperatures up to the maximum stated can be used but product lifetime may be reduced.

Temperature Measurements (Ambient ≤50 ° C)		
Component	Recommended Temperature ° C	Maximum Temperature ° C
C55 Capacitor	70	105
T302 Transformer	90	120
C314 Capacitor	70	105
D311 Diode	100	120