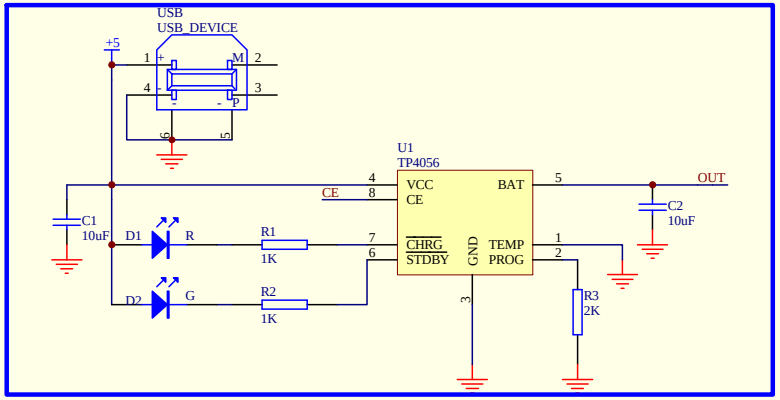

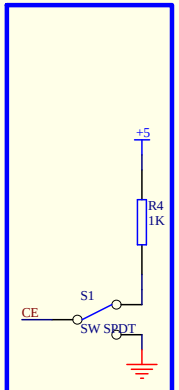

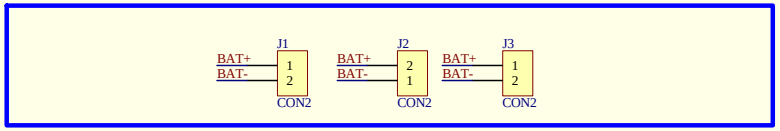

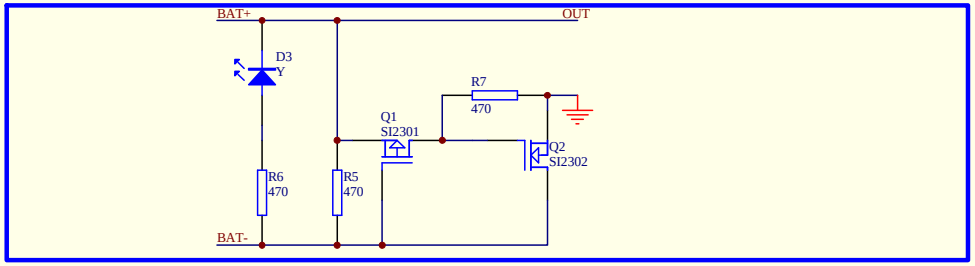

Title	Lithium Battery Charger	
Size A4	Number	Revision V0.2
Date: 28-Jun-2012		Sheet of
File: D:\PROJECT\W-project.ddb		Drawn By: