EVALUATION KIT AVAILABLE

MAX17300-MAX17303/ MAX17310-MAX17313

1-Cell ModelGauge m5 EZ Fuel Gauge with Protector, Internal Self-Discharge Detection and SHA-256 Authentication

General Description

The MAX17300-MAX17303/MAX17310-MAX17313 is a 24µA I_Q stand-alone pack-side fuel gauge IC with protector, optional battery internal self-discharge detection and optional SHA-256 authentication for 1-cell lithium-ion/polymer batteries.

The IC monitors the voltage, current, temperature, and state of the battery to provide against over/undervoltage, overcurrent, short-circuit, over/undertemperature, overcharge, and internal self-discharge conditions using external high-side N-FETs, and provides charging prescription to ensure that the lithium-ion/polymer battery operates under safe conditions prolonging the life of the battery.

To prevent battery pack cloning, the IC integrates SHA-256 authentication with a 160-bit secret key. Each IC incorporates a unique 64-bit ID.

The fuel gauge uses ModelGauge m5 algorithm that combines the short-term accuracy and linearity of a coulomb counter with the long-term stability of a voltage-based fuel gauge to provide industry-leading fuel-gauge accuracy.

The IC automatically compensates for cell aging, temperature, and discharge rate, and provides accurate state-of-charge (SOC) in milliampere-hours (mAh) or percentage (%) over a wide range of operating conditions.

Dynamic power functionality provides the instantaneous maximum battery output power which can be delivered to the system without violating the minimum system input voltage.

A Maxim 1-Wire® or 2-wire I^2C interface provides access to data and control registers. The IC is available in a lead-free, 3mm x 3mm 14-pin TDFN and 1.7mm x 2.5mm 15-bump 0.5mm pitch WLP packages.

Applications

- Smartphones, Tablets, and 2-in-1 Laptops
- Smartwatches and Wearables
- Medical Devices, Health and Fitness Monitors
- Digital Still, Video, and Action Cameras
- Handheld Computers and Terminals
- Handheld Radios
- Home and Building Automation, Sensors
- Smart Batteries

Benefits and Features

- Battery Health + Programmable Safety/Protection
  - Overvoltage (Temperature Dependent)
  - Overcharge Current
  - Over/Undertemperature
  - Battery Internal Self-Discharge Detection (MAX17300/10 Only)
  - Ideal Diode Discharge During Charge Fault
  - Charging Prescriptions (JEITA)
  - Zero-Volt Charging Option
  - Undervoltage + SmartEmpty
  - Overdischarge/Short-Circuit
- Nonvolatile Memory for Stand-Alone Operation
  - History Logging, User Data (122 Bytes)
- Low Quiescent Current
  - FETs Enabled: 24µA Active, 18µA Hibernate
  - FETs Disabled: 5µA Ship, 0.5µA/0.02µA DeepShip
- Parallel Battery Management (MAX17300/10 Only)
- Pushbutton Wakeup—Eliminates System Consumption Until Button Press
- ModelGauge m5 EZ Algorithm
  - Percent, Capacity,Time-to-Empty/Full, Age
  - Cycle+™ Age Forecast
- Dynamic Power—Estimates Power Capability
- Precision Measurement Without Calibration
  - Current, Voltage, Power, Time, Cycles
  - Die Temperature/Thermistor

Simple Fuel Gauge with Protector Circuit Diagram

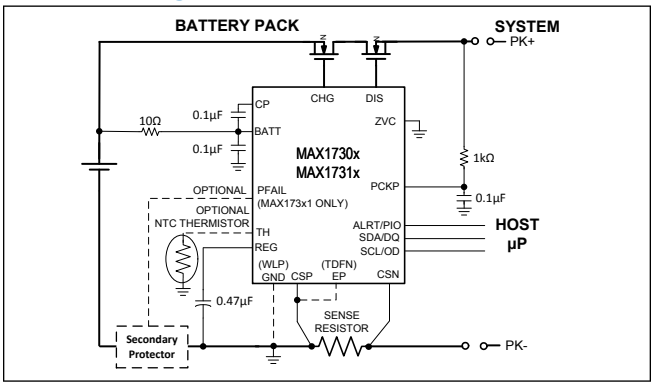

ModelGauge and Cycle+ are trademarks of Maxim Integrated Products, Inc.
1-Wire is a registered trademark of Maxim Integrated Products, Inc.

Ordering Information appears at end of data sheet.

19-100463; Rev 11; 2/25

© 2025 Analog Devices, Inc. All rights reserved. Trademarks and registered trademarks are the property of their respective owners.

TABLE OF CONTENTS

General Description . . . 1
Applications . . . 1
Benefits and Features . . . 1
Simple Fuel Gauge with Protector Circuit Diagram . . . 1
Absolute Maximum Ratings . . . 17
Package Information . . . 17
14 TDFN-EP . . . 17
15 WLP . . . 17
Electrical Characteristics . . . 18
Typical Operating Characteristics . . . 22
Pin Configurations . . . 24
WLP . . . 24
TDFN . . . 25
Pin Description . . . 25
Functional Diagram . . . 27
Detailed Description . . . 28
General Description . . . 28
Protector . . . 29
Protector Thresholds . . . 34
Voltage Thresholds . . . 34
Ideal Diode Behavior . . . 35
Current Thresholds . . . 36
Overcurrent Protection . . . 36
Fast Overcurrent Comparators . . . 37
Overcurrent Comparator Diagram . . . 38
Slow Overcurrent Protection . . . 38
Temperature Thresholds . . . 38
Other Thresholds . . . 38
Battery Internal Self-Discharge Detection (ISD) (MAX17300/MAX17310 Only) . . . 39
Permanent Failure . . . 40
Disabling FETs by Pin-Control or I^{2}C Command . . . 41
Charging Prescription . . . 41
Step Charging . . . 42
Zero-Volt Charging . . . 42
Parallel Battery Management (MAX17300/MAX17310 Only) . . . 44
ModelGauge m5 Algorithm . . . 45
Wakeup/Shutdown . . . 48
Modes of Operation . . . 48
Power Mode Transition State Diagram . . . 49

TABLE OF CONTENTS (CONTINUED)

Pushbutton Wakeup . . . 51
Register Description Conventions . . . 51
Standard Register Formats . . . 51
Device Reset . . . 51
Nonvolatile Backup and Initial Value . . . 51
Register Naming Conventions . . . 51
Protection Registers . . . 52
Voltage Protection Registers . . . 52
nVPrtTh1 Register (1D0h) . . . 52
nVPrtTh2 Register (1D4h) . . . 52
nJEITAV Register (1D9h) . . . 52
nJEITACfg Register (1DAh) . . . 53
Current Protection Registers . . . 53
nODSCTh Register (1DDh) . . . 53
nODSCCfg Register (1DEh) . . . 54
nIPrtTh1 Register (1D3h)—Overcurrent Protection Thresholds . . . 54
nJEITAC Register (1D8h) . . . 55
Temperature Protection Registers . . . 55
nTPrtTh1 Register (1D1h) . . . 55
nTPrtTh2 Register (1D5h) . . . 56
nTPrtTh3 Register (1D2h) (beyond JEITA) . . . 56
Fault Timer Registers . . . 56
nDelayCfg Register (1DCh) . . . 56
Battery Internal Self-Discharge Detection Registers (MAX17300/MAX1310 Only) . . . 58
Status/Configuration Protection Registers . . . 59
nProtCfg Register (1D7h) . . . 59
nBattStatus Register (1A8h) . . . 60
ProtStatus Register (0D9h) . . . 60
ProtAlrt Register (0AFh) . . . 61
HConfig2 Register (0F5h) . . . 61
nFaultLog Register (1AEh) . . . 61
Other Protection Registers . . . 62
nProtMiscTh Register (1D6h) . . . 62
Charging Prescription Registers . . . 62
ChargingCurrent Register (028h) . . . 62
ChargingVoltage Register (02Ah) . . . 62
nStepChg Register (1DBh) . . . 62
ModelGauge m5 Algorithm . . . 63
ModelGauge m5 Registers . . . 63

TABLE OF CONTENTS (CONTINUED)

ModelGauge m5 Algorithm Output Registers . . . 64
RepCap Register (005h) . . . 64
RepSOC Register (006h) . . . 64
FullCapRep Register (010h) . . . 65
TTE Register (011h) . . . 65
TTF Register (020h) . . . 65
Age Register (007h) . . . 65
Cycles Register (017h) and nCycles (1A4h) . . . 65
TimerH Register (0BEh) . . . 66
FullCap Register (010h) . . . 66
nFullCapNom Register (1A5h) . . . 66
RCell Register (014h) . . . 66
VRipple Register (0B2h) . . . 66
nVoltTemp Register (1AAh) . . . 67
SOCHold Register (0D0h) . . . 67
ModelGauge m5 EZ Performance . . . 67
OCV Estimation and Coulomb Count Mixing . . . 68
Empty Compensation . . . 69
End-of-Charge Detection . . . 70
Smart-Full (MAX17300/MAX17310 Only) . . . 72
Fuel Gauge Learning . . . 74
Converge-To-Empty . . . 75
Determining Fuel-Gauge Accuracy . . . 76
Initial Accuracy . . . 76
Cycle+ Age Forecasting . . . 77
nAgeFcCfg Register (1E2h) . . . 77
AgeForecast Register (0B9h) . . . 78
Age Forecasting Requirements . . . 78
Enabling Age Forecasting . . . 78
Battery Life Logging . . . 79
Life Logging Data Example . . . 79
Determining Number of Valid Logging Entries . . . 81
Reading History Data . . . 83
History Data Reading Example . . . 83
ModelGauge m5 Algorithm Input Registers . . . 83
nXTable0 (180h) to nXTable11 (18Bh) Registers . . . 83
nOCVTable0 (190h) to nOCVTable11 (19Bh) Registers . . . 83
nQRTable00 (1A0h) to nQRTable30 (1A3h) Registers . . . 84
nFullSOCThr Register (1C6h) . . . 84

TABLE OF CONTENTS (CONTINUED)

nVEmpty Register (19Eh) . . . 84
nDesignCap Register(1B3h) . . . 84
nRFast Register (1E5h) . . . 84
nIChgTerm Register (19Ch) . . . 85
nRComp0 Register (1A6h) . . . 85
nTempCo Register (1A7h) . . . 85
ModelGauge m5 Algorithm Configuration Registers . . . 85
nFilterCfg Register (19Dh) . . . 85
nRelaxCfg Register (1B6h) . . . 86
nTTFCfg Register (1C7h)/CV_MixCap (0B6h) and CV_HalfTime (0B7h) Registers . . . 87
nConvgCfg Register (1B7h) . . . 87
nRippleCfg Register (1B1h) . . . 88
ModelGauge m5 Algorithm Additional Registers . . . 88
Timer Register (03Eh) . . . 88
dQAcc Register (045h) . . . 88
dPAcc Register (046h) . . . 89
QResidual Register (00Ch) . . . 89
VFSOC Register (0FFh) . . . 89
VFOCV Register (0FBh) . . . 89
QH Register (4Dh) . . . 89
AvCap Register (01Fh) . . . 89
AvSOC Register (00Eh) . . . 89
MixSOC Register (00Dh) . . . 90
MixCap Register (02Bh) . . . 90
VFRemCap Register (04Ah) . . . 90
FStat Register (03Dh) . . . 90
FOTPStat Register (0BBh) . . . 91
Memory . . . 91
ModelGauge m5 Memory Space . . . 93
Nonvolatile Memory . . . 94
Nonvolatile Memory Map . . . 94
100 Record Life Logging . . . 95
nNVCfg0 Register (1B8h) . . . 96
nNVCfg1 Register (1B9h) . . . 97
nNVCfg2 Register (1BAh) . . . 99
Enabling and Freeing Nonvolatile vs. Defaults . . . 99
Shadow RAM . . . 106
Shadow RAM and Nonvolatile Memory Relationship . . . 107
Nonvolatile Memory Commands . . . 107

TABLE OF CONTENTS (CONTINUED)

COPY NV BLOCK [E904h] . . . 107
NV RECALL [E001h] . . . 107
HISTORY RECALL [E2XXh] . . . 107
Nonvolatile Block Programming . . . 108
Determining Number of Remaining Updates . . . 108
nLearnCfg Register (19Fh) . . . 109
nMiscCfg Register (1B2h) . . . 109
nConfig Register (1B0h) . . . 110
nPackCfg Register (1B5h) . . . 111
nMiscCfg2 Register (1E4h) (MAX17300/MAX17310 Only) . . . 111
nDesignVoltage Register (1E3h) . . . 112
Memory Locks . . . 112
NV LOCK [6AXXh] . . . 112
Locking Memory Blocks . . . 113
Reading Lock State . . . 113
Analog Measurements . . . 113
Voltage Measurement . . . 113
VCell Register (01Ah) . . . 113
VCellRep Register (012h) (MAX17300/MAX17310 Only) . . . 113
AvgVCell Register (019h) . . . 114
MaxMinVolt Register (0008h) . . . 114
MinVolt Register (0ADh) . . . 114
Cell1 Register (0D8h) . . . 114
AvgCell1 Register (0D4h) . . . 115
Batt Register (0D7h) . . . 115
Current Measurement . . . 115
Current Measurement Timing . . . 115
Current Register (01Ch) . . . 115
CurrRep Register (022h) (MAX17300/MAX17310 Only) . . . 116
AvgCurrent Register (01Dh) . . . 117
MaxMinCurr Register (00Ah) . . . 117
MinCurr Register (0AEh) . . . 118
nCGain Register (1C8h) . . . 118
CGTempCo (0B8h)/nCGTempCo (0x1C9) Register . . . 118
Copper Trace Current Sensing . . . 119
Temperature Measurement . . . 119
Temperature Measurement Timing . . . 119
Temp Register (01Bh) . . . 120
AvgTA Register (016h) . . . 120

TABLE OF CONTENTS (CONTINUED)

MaxMinTemp Register (009h) . . . 120
nTCurve Register (1C9h) . . . 121
nTGain (1CAh) Register/nTOff (1CBh) Register . . . 121
nThermCfg (1CAh) (DevName≥4070h Only) . . . 121
DieTemp (034h) Register . . . 122
AvgDieTemp (040h) Register . . . 122
Power . . . 122
Status and Configuration Registers . . . 122
DevName Register (021h) . . . 122
nROMID0 (1BCh)/nROMID1 (1BDh)/nROMID2 (1BEh)/nROMID3 (1BFh) Registers . . . 123
nRSense Register (1CFh) . . . 123
Status Register (000h) . . . 123
Status2 Register (0B0h) . . . 124
nHibCfg Register (1BBh) . . . 124
CommStat Register (061h) . . . 125
At-Rate Functionality . . . 126
AtRate Register (004h) . . . 126
AtQResidual Register (0DCh) . . . 126
AtTTE Register (0DDh) . . . 126
AtAvSOC Register (0CEh) . . . 126
AtAvCap Register (0DFh) . . . 126
Alert Function . . . 127
nVAlrtTh Register (18Ch) . . . 127
nTAlrtTh Register (18Dh) . . . 127
nSAlrtTh Register (18Fh) . . . 128
nIAlrtTh Register (0ACh) . . . 128
Smart Battery Compliant Operation . . . 128
SBS Compliant Memory Space (MAX17301-MAX17303 Only) . . . 129
sRemCapAlarm/sRemTimeAlarm Registers (101h/102h) . . . 129
At-Rate Functionality . . . 129
sAtRate Register (104h) . . . 129
sAtTTF Register (105h) . . . 130
sAtTTE Register (105h) . . . 130
sAtRateOK Register (107h) . . . 130
sTemperature Register (108h) . . . 130
sPackVoltage Register (109h) . . . 130
sChargingCurrent Register (114h) . . . 130
sDesignVolt Register (119h) . . . 130
sSpecInfo Register (11Ah) . . . 131

TABLE OF CONTENTS (CONTINUED)

sSerialNumber Register (11Ch to 11Eh) . . . 131
sManfctrName Register (120h) . . . 131
sDeviceName Register (121h) . . . 131
sDevChemistry Register (122h) . . . 131
sManfctData Registers (123h to 12Fh) . . . 131
sFirstUsed Register (136h) . . . 132
sCell1 Register (13Fh) . . . 132
sAvgCell1 Register (14Fh) . . . 132
sAvCap Register (167h) . . . 132
sMixCap Register (168h) . . . 132
sManfctInfo Register (170h) . . . 132
Nonvolatile SBS Register Back-Up . . . 132
nSBSCfg Register (1B4h) . . . 133
nCGain and Sense Resistor Relationship . . . 133
Dynamic Battery Power Technology (DBPT) Registers . . . 134
MaxPeakPower Register (0A4h) . . . 134
SusPeakPower Register (0A5h) . . . 134
sPackResistance (0A6h) and nPackResistance (1C5h) . . . 135
SysResistance (0A7h) . . . 135
sMPPCurrent (0A9h) . . . 135
SPPCurrent (0AAh) . . . 135
nDPLimit Register (1E0h) . . . 135
SHA-256 Authentication . . . 136
Authentication Procedure . . . 136
Procedure to Verify a Battery . . . 137
Alternate Authentication Procedure . . . 137
Battery Authentication without a Host Side Secret . . . 138
Secret Management . . . 138
Single Step Secret Generation . . . 139
Single Step Secret Generation Example . . . 139
Multistep Secret Generation Procedure . . . 140
Multistep Secret Generation Example . . . 141
2-Stage MKDF Authentication Scheme . . . 141
Create a Unique Intermediate Secret . . . 142
Procedure for 2-Stage MKDF Authentication . . . 143
Determining Number of Remaining Updates . . . 143
Authentication Commands . . . 144
COMPUTE MAC WITHOUT ROM ID [3600h] . . . 144
COMPUTE MAC WITH ROM ID [3500h] . . . 144

TABLE OF CONTENTS (CONTINUED)

COMPUTE NEXT SECRET WITHOUT ROM ID [3000h] . . . 144
COMPUTE NEXT SECRET WITH ROM ID [3300h] . . . 145
CLEAR SECRET [5A00h] . . . 145
LOCK SECRET [6000h] . . . 145
COPY INTERMEDIATE SECRET FROM NVM [3800] . . . 145
COMPUTE NEXT INTERMEDIATE SECRET WITH ROMID [3900] . . . 145
COMPUTE NEXT INTERMEDIATE SECRET WITHOUT ROMID [3A00] . . . 145
COMPUTE MAC FROM INTERMEDIATE SECRET WITHOUT ROMID [3C00] . . . 145
COMPUTE MAC FROM INTERMEDIATE SECRET WITH ROMID [3D00] . . . 145
Device Reset . . . 145
Reset Commands . . . 146
HARDWARE RESET [000Fh to address 060h] . . . 146
FUEL GAUGE RESET [8000h to address 0ABh] . . . 146
Communication . . . 146
2-Wire Bus System . . . 146
Hardware Configuration . . . 146
2-Wire Bus Interface Circuitry . . . 147
I/O Signaling . . . 147
Bit Transfer . . . 147
Bus Idle . . . 147
START and STOP Conditions . . . 147
Acknowledge Bits . . . 147
Data Order . . . 148
Slave Address . . . 148
Read/Write Bit . . . 148
Bus Timing . . . 148
2-Wire Bus Timing Diagram . . . 148
I^2C Protocols . . . 149
I^2C Write Data Protocol . . . 149
I^2C Read Data Protocol . . . 149
SBS Protocols . . . 150
SBS Write Word Protocol . . . 150
Example SBS Write Word Communication Sequence . . . 151
SBS Read Word Protocol . . . 151
Example SBS Read Word Communication Sequence . . . 151
SBS Write Block Protocol . . . 151
SBS Read Block Protocol . . . 152
Example SBS Read Block Communication Sequence . . . 152
Valid SBS Read Block Registers . . . 152

TABLE OF CONTENTS (CONTINUED)

Packet Error Checking . . . 152
PEC CRC Generation Block Diagram . . . 153
1-Wire Bus System (MAX17310-MAX17313 Only) . . . 153
Hardware Configuration . . . 153
1-Wire Bus Interface Circuitry . . . 154
64-Bit Net Address (ROM ID) . . . 154
I/O Signaling . . . 154
Reset Time Slot . . . 155
1-Wire Initialization Sequence . . . 155
Write Time Slots . . . 155
Read Time Slots . . . 155
1-Wire Write and Read Time Slots . . . 156
Transaction Sequence . . . 157
Net Address Commands . . . 157
Read Net Address [33h] . . . 157
Match Net Address [55h] . . . 157
Skip Net Address [CCh] . . . 157
Search Net Address [F0h] . . . 157
1-Wire Functions . . . 157
Read Data [69h, LL, HH] . . . 157
Write Data [6Ch, LL, HH] . . . 158
Example 1-Wire Communication Sequences . . . 158
Summary of Commands . . . 159
Appendix A: Reading History Data Pseudo-Code Example . . . 159
Typical Application Circuits . . . 162
Typical Application Schematic . . . 162
Typical Application with a Secondary Protector . . . 163
Typical Application with a Fuse . . . 164
Pushbutton Schematic . . . 164
Ordering Information . . . 166
Revision History . . . 168

LIST OF FIGURES

Figure 1. Simplified Protector State Machine . . . 31
Figure 2. Programmable Voltage Thresholds . . . 33
Figure 3. Programmable Current Thresholds . . . 34
Figure 4. Fast, Medium, and Slow Overdischarge Protection . . . 37
Figure 5. Overcurrent Comparator Diagram . . . 38
Figure 6. Example of Internal Self-Discharge with Temperature Variation . . . 40
Figure 7. Step-Charging State Machine . . . 42
Figure 8. Zero-Volt Recovery Charge . . . 43
Figure 9. Zero-Volt Charging Diagram . . . 44
Figure 10. Merger of Coulomb Counter and Voltage Based Fuel Gauge . . . 46
Figure 11. ModelGauge m5 Block Diagram . . . 47
Figure 12. Power Mode Transition State Diagram . . . 50
Figure 13. ModelGauge m5 Registers . . . 64
Figure 14. Voltage and Coulomb Count Mixing . . . 68
Figure 15. ModelGauge m5 Typical Accuracy Example . . . 69
Figure 16. Handling Changes in Empty Calculation . . . 70
Figure 17. False End-of-Charge Events . . . 71
Figure 18. FullCapRep Learning at End-of-Charge . . . 72
Figure 19. Smart-Full Example . . . 73
Figure 20. FullCapNom Learning . . . 75
Figure 21. Converge-To-Empty . . . 76
Figure 22. Benefits of Age Forecasting . . . 77
Figure 23. Sample Life Logging Data . . . 80
Figure 24. Write Flag Register and Valid Flag Register Formats . . . 82
Figure 25. Cell Relaxation Detection . . . 87
Figure 26. Shadow RAM and Nonvolatile Memory Relationship . . . 107
Figure 27. Noiseless Current . . . 117
Figure 28. Procedure to Verify a Battery . . . 137
Figure 29. Battery Authentication without a Host Side Secret . . . 138
Figure 30. Single Step Secret Generation Example . . . 139
Figure 31. Multistep Secret Generation Example . . . 141
Figure 32. Create a Unique Intermediate Secret . . . 142
Figure 33. Procedure for 2-Stage MKDF Authentication . . . 143
Figure 34. 2-Wire Bus Interface Circuitry . . . 147
Figure 35. 2-Wire Bus Timing Diagram . . . 148
Figure 36. Example I^2C Write Data Communication Sequence . . . 149
Figure 37. Example I^2C Read Data Communication Sequence . . . 150
Figure 38. Example SBS Write Word Communication Sequence . . . 151
Figure 39. Example SBS Read Word Communication Sequence . . . 151

LIST OF FIGURES (CONTINUED)

Figure 40. Example SBS Read Block Communication Sequence 152
Figure 41. PEC CRC Generation Block Diagram 153
Figure 42. 1-Wire Bus Interface Circuitry 154
Figure 43. 1-Wire Initialization Sequence 155
Figure 44. 1-Wire Write and Read Time Slots. 156
Figure 45. Example 1-Wire Communication Sequences. 158

LIST OF TABLES

Table 1. Summary of Protector Registers by Function . . . 32
Table 2. Voltage Thresholds . . . 35
Table 3. AvgCurrDet Threshold When Using 10mΩ and Default nProtMiscTh.CurrDet = 7.5mA . . . 36
Table 4. Current Threshold Summary . . . 36
Table 5. Other Thresholds . . . 38
Table 6. Parallel Control Modes . . . 45
Table 7. Typical Quiescent Current Values . . . 48
Table 8. Modes of Operation . . . 48
Table 9. Low Power Modes Entry and Exit Conditions . . . 49
Table 10. Recommended nHibCfg Settings and the Impact on I_Q . . . 49
Table 11. ModelGauge Register Standard Resolutions . . . 51
Table 12. nVPrtTh1 Register (1D0h) Format . . . 52
Table 13. nVPrtTh2 Register (1D4h) Format . . . 52
Table 14. nJEITAV Register (1D9h) Format . . . 53
Table 15. nJEITACfg Register (1DAh) Format . . . 53
Table 16. nODSCTh Register (1DDh) Format . . . 53
Table 17. OCTH, SCTh, and ODTH Sample Values . . . 54
Table 18. nODSCCfg Register (1DEh) Format . . . 54
Table 19. nIPrtTh1 Register (1D3h) Format . . . 55
Table 20. nJEITAC Register (1D8h) Format . . . 55
Table 21. nTPrtTh1 Register (1D1h) Format . . . 55
Table 22. nTPrtTh2 (1D5h) Format . . . 56
Table 23. nTPrtTh3 Register (1D2h) Format . . . 56
Table 24. nDelayCfg (1DCh) Format . . . 56
Table 25. UVPTimer Settings . . . 57
Table 26. TempTimer Setting . . . 57
Table 27. TempTrans Configuration Settings . . . 57
Table 28. PermFailTimer Settings . . . 57
Table 29. OverCurrTimer Settings . . . 57
Table 30. OVPTimer Settings . . . 57
Table 31. FullTimer Settings . . . 57
Table 32. ChgWDT Settings . . . 58
Table 33. nCheckSum Register (1DFh) Format . . . 58
Table 34. Alert and Fault Mode Settings . . . 58
Table 35. LeakCurrRep Register (0x16F) Format . . . 59
Table 36. nProtCfg Register (1D7h) Format . . . 59
Table 37. nBattStatus Register (1A8h) Format . . . 60
Table 38. ProtStatus Register (0D9h) Format . . . 60
Table 39. ProtAlrt Register (0AFh) Format . . . 61

LIST OF TABLES (CONTINUED)

Table 40. HConfig2 (0F5h) Format . . . 61
Table 41. nFaultLog Register (1AEh) Format . . . 62
Table 42. nProtMiscTh Register (1D6h) Format . . . 62
Table 43. nStepChg Register (1DBh) Format . . . 62
Table 44. Cycles Register (017h) Format . . . 65
Table 45. nCycles Register (1A4h) Format . . . 65
Table 46. nNVCfg2.FibScl Setting Determines LSb of nNVCfg2.CyclesCount . . . 66
Table 47. nVoltTemp Register (1AAh) Format when nNVCfg2.enVT = 1 . . . 67
Table 48. SOCHold (0D0h) Format . . . 67
Table 49. nAgeFcCfg Register (1E2h) Format . . . 77
Table 50. Minimum and Maximum Cell Sizes for Age Forecasting . . . 78
Table 51. Life Logging Register Summary . . . 79
Table 52. Reading History Page Flags . . . 81
Table 53. Decoding History Page Flags . . . 82
Table 54. Reading History Data . . . 83
Table 55. nFullSOCThr (1C6h)/FullSOCThr (013h) Register Format . . . 84
Table 56. VEmpty (03Ah)/nVEmpty (19Eh) Register Format . . . 84
Table 57. nRFast Register (1E5h) Format . . . 85
Table 58. FilterCfg (029h)/nFilterCfg (19Dh) Register Format . . . 86
Table 59. RelaxCfg (0A0h)/nRelaxCfg (1B6h) Register Format . . . 86
Table 60. nTTFCfg Register (1C7h) Format . . . 87
Table 61. nConvgCfg Register (1B7h) Format . . . 88
Table 62. nRippleCfg Register (1B1h) Format . . . 88
Table 63. FStat Register (03Dh) Format . . . 90
Table 64. FOTPStat Register (0BBh) Format . . . 91
Table 65. Top Level Memory Map . . . 91
Table 66. Individual Registers . . . 93
Table 67. ModelGauge m5 Register Memory Map . . . 93
Table 68. Nonvolatile Register Memory Map (Slave address 0x16) . . . 94
Table 69. Fibonacci Configuration Settings . . . 95
Table 70. Eventual Matured Update Interval (in battery cycles) . . . 95
Table 71. Saving Schedule Example With the Most Preferred Configurations . . . 96
Table 72. nNVCfg0 Register (1B8h) Format . . . 96
Table 73. nNVCfg1 Register (1B9h) Format . . . 98
Table 74. nNVCfg2 Register (1BAh) Format . . . 99
Table 75. Making Nonvolatile Memory Available for User Data . . . 100
Table 76. Nonvolatile Memory Configuration Options . . . 103
Table 77. History Recall Command Functions . . . 107
Table 78. Number of Remaining Config Memory Updates . . . 108

LIST OF TABLES (CONTINUED)

Table 79. LearnCfg (0A1h)/nLearnCfg (19Fh) Register Format . . . 109
Table 80. MiscCfg (00Fh)/nMiscCfg (1B2h) Register Format . . . 109
Table 81. nConfig Register (1B0h) Format . . . 110
Table 82. Config Register (00Bh) Format . . . 110
Table 83. Config2 Register (0ABh) Format . . . 110
Table 84. nPackCfg Register (1B5h) Format . . . 111
Table 85. nMiscCfg2 Register (0x1E4h) Format . . . 111
Table 86. nDesignVoltage Register (1E3h) Format . . . 112
Table 87. Format of LOCK Command . . . 112
Table 88. Format of Lock Register (07Fh) . . . 113
Table 89. MaxMinVolt (008h)/nMaxMinVolt (1ACh) Register Format . . . 114
Table 90. Current Measurement Timing . . . 115
Table 91. Current Measurement Range and Resolution vs. Sense Resistor Value . . . 116
Table 92. MaxMinCurr (00Ah)/nMaxMinCurr (1ABh) Register Format . . . 118
Table 93. nCGain Register (1C8h) Format . . . 118
Table 94. Copper Trace Sensing . . . 119
Table 95. Temperature Measurement Timing . . . 120
Table 96. MaxMinTemp (009h)/nMaxMinTemp (1ADh) Register Format . . . 120
Table 97. Register Settings for Common Thermistor Types . . . 121
Table 98. Register Settings for Common Thermistor Types with New Thermistor Calculations . . . 121
Table 99. DevName Register (021h) Format . . . 122
Table 100. DevName For Each Part Number . . . 122
Table 101. nPReserved0-3 Settings Based on DevName . . . 122
Table 102. nROMID Registers (1BCh to 1BFh) Format . . . 123
Table 103. Recommended nRSense Register Values for Common Sense Resistors . . . 123
Table 104. Status Register (000h) Format . . . 123
Table 105. Status2 Register (0B0h) Format . . . 124
Table 106. nHibCfg Register (1BBh) Format . . . 125
Table 107. CommStat Register (061h) Format . . . 125
Table 108. VAlrtTh (001h)/nVAlrtTh (18Ch) Register Format . . . 127
Table 109. TAlrtTh (002h)/nTAlrtTh (18Dh) Register Format . . . 128
Table 110. SAlrtTh (003h)/nSAlrtTh (18Fh) Register Format . . . 128
Table 111. IAlrtTh (0ACh)/nIAlrtTh (18Eh) Register Format . . . 128
Table 112. SBS Register Space Memory Map . . . 129
Table 113. SpecInfo (11Ah) Format . . . 131
Table 114. SBS to Nonvolatile Memory Mapping . . . 132
Table 115. nSBSCfg Register (1B4h) Format . . . 133
Table 116. nCGain Register Settings to Meet SBS Compliance . . . 133
Table 117. nDPLimit (1E0h) Format . . . 135

LIST OF TABLES (CONTINUED)

Table 118. Number of Remaining Secret Updates 144
Table 119. 2-Wire Slave Addresses 148
Table 120. Valid SBS Read Block Registers. 152
Table 121. 1-Wire Net Address Format. 154
Table 122. All Function Commands 159

Absolute Maximum Ratings

CP to BATT ..... -0.3V to BATT + 6V
CHG to BATT ..... -0.3V to CP + 0.3V
Continuous Sink Current for BATT 50mA
Continuous Sink Current for DQ/SDA, ALRT, PFAIL 20mA
Continuous Source Current for PFAIL 20mA
Operating Temperature Range ..... -40°C to +85°C
Storage Temperature Range ..... -55°C to +125°C
Soldering Temperature (reflow) ..... +260°C
Lead Temperature (soldering 10s) ..... +300°C
TDFN
- BATT to CSP ..... -0.3V to +6V
- ALRT to CSP ..... -0.3V to +17V
- TH, PFAIL to CSP ..... -0.3 V to BATT + 0.3 V
- DQ/SDA, OD/SCL, ZVC to CSP ..... -0.3V to +6V
- REG to CSP ..... -0.3V to +2.2V
- CSN to CSP ..... -2V to +2V
- DIS to CSP ..... -0.3V to CP + 0.3V
- PCKP to CSP ..... -0.3V to 18V

WLP
- BATT to GND ..... -0.3V to +6V
- ALRT to GND ..... -0.3V to +17V
- TH, PFAIL to GND ..... -0.3 V to BATT + 0.3 V
- DQ/SDA, OD/SCL, ZVC to GND ..... -0.3V to +6V
- REG to GND ..... -0.3V to +2.2V
- CSN to CSP ..... -2V to +2V
- CSP to GND ..... -0.3V to +0.3V
- DIS to GND ..... -0.3V to CP + 0.3V
- PCKP to GND ..... -0.3V to 18V

Stresses beyond those listed under "Absolute Maximum Ratings" may cause permanent damage to the device. These are stress ratings only, and functional operation of the device at these or any other conditions beyond those indicated in the operational sections of the specifications is not implied. Exposure to absolute maximum rating conditions for extended periods may affect device reliability.

Package Information

14 TDFN-EP

Package Code	T1433+2C
Outline Number	21-0137
Land Pattern Number	90-0063
THERMAL RESISTANCE, SINGLE-LAYER BOARD	
Junction to Ambient (θ_{JA})	54°C/W
Junction to Case (θ_{JC})	8°C/W
THERMAL RESISTANCE, FOUR-LAYER BOARD	
Junction to Ambient (θ_{JA})	41°C/W
Junction to Case (θ_{JC})	8°C/W

15 WLP

Package Code	W151H2+1
Outline Number	21-100256
Land Pattern Number	Refer to *Application Note 1891*
THERMAL RESISTANCE, FOUR-LAYER BOARD	
Junction to Ambient (θ_{JA})	62°C/W
Junction to Case (θ_{JC})	N/A

For the latest package outline information and land patterns (footprints), go to *www.analog.com/packages*. Note that a "+", "#", or "-" in the package code indicates RoHS status only. Package drawings may show a different suffix character, but the drawing pertains to the package regardless of RoHS status.

Package thermal resistances were obtained using the method described in JEDEC specification JESD51-7, using a four-layer board. For detailed information on package thermal considerations, refer to *www.analog.com/thermal-tutorial*.

Electrical Characteristics

(V_{BATT} = 2.3V to 4.9V (2.16V to 4.9V for MAX17300/MAX17310), typical value at 3.6V, T_A = -40°C to +85°C, typical values are T_A = +25°C, see schematic in the Functional Diagram. Limits are 100% tested at T_A = +25°C. Limits over the operating temperature range and relevant supply voltage range are guaranteed by design and characterization.)

PARAMETER	SYMBOL	CONDITIONS		MIN	TYP	MAX	UNITS
POWER SUPPLY							
Supply Voltage (MAX17300/MAX17310)	V_{BATT}	(Note 1)		2.16		4.9	V
Supply Voltage (MAX17301-03/11-13)	V_{BATT}	(Note 1)		2.3		4.9	V
DeepShip2 Supply Current	I_{DD0}	Undervoltage shutdown			0.02	0.1	µA
DeepShip Supply Current	I_{DD1}	T_A ≤ +50°C, typical at +25°C			0.5	1.1	µA
Ship Supply Current	I_{DD2}	DpShpEn = 0, T_A ≤ +50°C, typical at +25°C, protection FETs off	1.4s updates	7	10	20	µA
			5.625s updates		7		
Hibernate Supply Current	I_{DD3}	T_A ≤ +50°C, typical at +25°C, average current, CHG and DIS on, 1.4s updates		8	18	36	µA
Active Supply Current	I_{DD4}	T_A ≤ +50°C, typical at +25°C, average current, not including thermistor measurement current		13	24	50	µA
Regulation Voltage	V_{REG}				1.8		V
PCKP Startup Voltage (MAX17300/MAX17310)	V_{PCKPSU}	V_{BATT} ≥ 2.16V			1.9	2.6	V
PCKP Startup Voltage (MAX17301-03/11-13)	V_{PCKPSU}	V_{BATT} ≥ 2.3V			1.9	2.6	V
PROTECTION FET DRIVERS							
CP Output Voltage	V_{CP}	I_{CHG} + I_{DIS} = 1µA		2 x V_{BATT} - 0.4	2 x V_{BATT} - 0.2	2 x V_{BATT}	V
CP Startup Time	t_{SCP}	FETS Off, C_{CP} = 0.1µF, 1-tau settling		10	15	20	ms
CHG, DIS Output High	V_{OHC}, V_{OHD}	I_{OH} = -100µA		V_{CP} - 0.4			V
CHG Output Low	V_{OLC}	I_{OL} = 100µA				BATT + 0.1	V
DIS Output Low	V_{OLD}	I_{OL} = 100µA				0.1	V
ANALOG-TO-DIGITAL CONVERSION							
Voltage Measurement Error	V_{GERR}	T_A = +25°C		-7.5		+7.5	mV
		-40ºC ≤ T_A ≤ +85ºC		-20		+20	
Voltage Measurement Resolution	V_{LSB}				78.125		µV
Voltage Measurement Range (MAX17300/MAX17310)	V_{FS}			2.16		4.9	V
Voltage Measurement Range (MAX17301-03/11-13)	V_{FS}			2.3		4.9	V

Electrical Characteristics (continued)

(V_{BATT} = 2.3V to 4.9V (2.16V to 4.9V for MAX17300/MAX17310), typical value at 3.6V, T_A = -40°C to +85°C, typical values are T_A = +25°C, see schematic in the Functional Diagram. Limits are 100% tested at T_A = +25°C. Limits over the operating temperature range and relevant supply voltage range are guaranteed by design and characterization.)

PARAMETER	SYMBOL	CONDITIONS	MIN	TYP	MAX	UNITS
Current Measurement Offset Error	I_{OERR}	CSN = 0V, long-term average (Note 2)		±1.5		µV
Current Measurement Gain Error	I_{GERR}	CSP between -50mV and +50mV	-1		+1	% of Reading
Current Measurement Resolution	I_{LSB}			1.5625		µV
Current Measurement Range	I_{FS}			±51.2		mV
Internal Temperature Measurement Error	TI_{GERR}			±1		ºC
Internal Temperature Measurement Resolution	TI_{LSB}	TH (Note 1)		0.00391		ºC
INPUT/OUTPUT						
Output Drive Low, ALRT, SDA/DQ, PFAIL	V_{OL}	I_{OL} = 4mA, V_{BATT} = 2.3V	0.01		0.4	V
Output Drive High, PFAIL	V_{OH}	I_{OH} = -1mA, V_{BATT} = 2.3V	V_{BATT} - 0.1			V
Input Logic High, SCL/OD, SDA/DQ, PIO	V_{IH}		1.5			V
Input Logic Low, SCL/OD, SDA/DQ, PIO	V_{IL}				0.5	V
PIO Wake Debounce	PIO_WD	Sleep mode		100		ms
External Thermistance Resistance	R_{EXT10}	nPackCfg.R100 = 0		10		kΩ
	R_{EXT100}	nPackCfg.R100 = 1		100		
COMPARATORS						
Overcurrent Threshold Offset Error	$ODOC_{OE}$	OC, OD comparator for WLP package	-1.2		+1.2	mV
		OC, OD comparator for TDFN package	-2		+2	
Short-Circuit Threshold Offset Error	SC_{OE}	SC comparator	-2.5		+2.5	mV
Overcurrent Threshold Gain Error	$ODOCSC_{GE}$	OC, OD, or SC comparator	-5.0		+5.0	% of Threshold
Overcurrent Comparator Delay	OC_{DLY}	OD or SC comparator, 20mV minimum input overdrive, delay configured to minimum		2	6	µs
RESISTANCE AND LEAKAGE						
Leakage Current, CSN, ALRT, TH	I_{LEAK}	V_{ALRT} < 15V	-1		+1	µA
Input Pulldown Current	I_{PD}	SDA, SCL pin = 0.4V		0.2	0.5	µA
PCKP Current Consumption	PCKP_IDD	BATT = PCKP; T_A < 50°C, typical at T_A = +25°C	0.02	0.44	0.9	µA
TIMING						
Time-Base Accuracy	t_{ERR}	T_A = +25°C	-1.5		+1.5	%

Electrical Characteristics (continued)

(V_{BATT} = 2.3V to 4.9V (2.16V to 4.9V for MAX17300/MAX17310), typical value at 3.6V, T_A = -40°C to +85°C, typical values are T_A = +25°C, see schematic in the Functional Diagram. Limits are 100% tested at T_A = +25°C. Limits over the operating temperature range and relevant supply voltage range are guaranteed by design and characterization.)

PARAMETER	SYMBOL	CONDITIONS	MIN	TYP	MAX	UNITS
SHA Calculation Time	t_{SHA}			4.5	10	ms
TH Precharge Time	t_{PRE}	Time between turning on the TH bias and analog-to-digital conversions	8.48			ms
Task Period	t_{TP}			351.5		ms
NONVOLATILE MEMORY						
Nonvolatile Access Voltage	V_{NVM}	For block programming and recalling, applied on BATT	3.0			V
Programming Supply Current	I_{PROG}	Current from BATT at 2.9V for block programming	2	5.5	10	mA
Block Programming Time	t_{BLOCK}			368	7360	ms
Page Programming Time	t_{UPDATE}	SHA secret update or learned parameters update		64	1280	ms
Nonvolatile Memory Recall Time	t_{RECALL}				5	ms
Write Capacity, Configuration Memory	n_{CONFIG}	(Notes 2, 3, 4)		7		writes
Write Capacity, SHA Secret	n_{SECRET}	(Notes 2, 3, 4)		5		writes
Write Capacity, Learned Parameters	$n_{LEARNED}$	(Notes 2, 3, 4)		99		writes
Data Retention	t_{NV}	(Note 2)	10			years
1-WIRE INTERFACE, REGULAR SPEED						
Time Slot	t_{SLOT_STD}		60		120	µs
Recovery Time	t_{REC_STD}		1			µs
Write-0 Low Time	t_{LOW0_STD}		60		120	µs
Write-1 Low Time	t_{LOW1_STD}		1		15	µs
Read-Data Valid	t_{RDV_STD}				15	µs
Reset-Time High	t_{RSTH_STD}		480			µs
Reset-Time Low	t_{RSTL_STD}		480		960	µs
Presence-Detect High	t_{PDH_STD}		15		60	µs
Presence-Detect Low	t_{PDL_STD}		60		240	µs
1-WIRE INTERFACE, OVERDRIVE SPEED						
Time Slot	t_{SLOT_OVD}		6		16	µs
Recovery Time	t_{REC_OVD}		1			µs
Write-0 Low Time	t_{LOW0_OVD}		6		16	µs
Write-1 Low Time	t_{LOW1_OVD}		1		2	us
Read-Data Valid	t_{RDV_OVD}				2	µs
Reset-Time High	t_{RSTH_OVD}		48			µs
Reset-Time Low	t_{RSTL_OVD}		48		80	µs

Electrical Characteristics (continued)

(V_{BATT} = 2.3V to 4.9V (2.16V to 4.9V for MAX17300/MAX17310), typical value at 3.6V, T_A = -40°C to +85°C, typical values are T_A = +25°C, see schematic in the Functional Diagram. Limits are 100% tested at T_A = +25°C. Limits over the operating temperature range and relevant supply voltage range are guaranteed by design and characterization.)

PARAMETER	SYMBOL	CONDITIONS	MIN	TYP	MAX	UNITS
Presence-Detect High	t_{PDH_OVD}		2		6	µs
Presence-Detect Low	t_{PDL_OVD}		8		24	µs
2-WIRE INTERFACE						
SCL Clock Frequency	f_{SCL}	(Note 5)	0		400	kHz
Bus Free Time Between a STOP and START Condition	t_{BUF}		1.3			µs
Hold Time (Repeated) START Condition	$t_{HD:STA}$	(Note 6)	0.6			µs
Low Period of SCL Clock	t_{LOW}		1.3			µs
High Period of SCL Clock	t_{HIGH}		0.6			µs
Setup Time for a Repeated START Condition	$t_{SU:STA}$		0.6			µs
Data Hold Time	$t_{HD:DAT}$	(Notes 7, 8)	0		0.9	µs
Data Setup Time	$t_{SU:DAT}$	(Note 7)	100			ns
Rise Time of Both SDA and SCL Signals	t_R		5		300	ns
Fall Time of Both SDA and SCL Signals	t_F		5		300	ns
Setup Time for STOP Condition	$t_{SU:STO}$		0.6			µs
Spike Pulse Width Suppressed by Input Filter	t_{SP}	(Note 9)			50	ns
Capacitive Load for Each Bus Line	C_B				400	pF
SCL, SDA Input Capacitance	C_{BIN}			6		pF

Note 1: All voltages are referenced to CSP in the TDFN package. All voltages are referenced to GND in the WLP package.

Note 2: Specification is guaranteed by design (GBD) and not production tested.

Note 3: Write capacity numbers shown have one write subtracted for the initial write performed during manufacturing test to set nonvolatile memory to a known value.

Note 4: Due to the nature of one-time programmable memory, write endurance cannot be production tested. Follow the nonvolatile memory and SHA secret update procedures detailed in the data sheet.

Note 5: Timing must be fast enough to prevent the IC from entering shutdown mode due to bus low for a period greater than the shutdown timer setting.

Note 6: f_{SCL} must meet the minimum clock low time plus the rise/fall times.

Note 7: The maximum $t_{HD:DAT}$ has only to be met if the device does not stretch the low period (t_{LOW}) of the SCL signal.

Note 8: This device internally provides a hold time of at least 100ns for the SDA signal (referred to the minimum V_{IH} of the SCL signal) to bridge the undefined region of the falling edge of SCL.

Note 9: Filters on SDA and SCL suppress noise spikes at the input buffers and delay the sampling instant.

Typical Operating Characteristics

(T_A = +25°C, unless otherwise noted.)

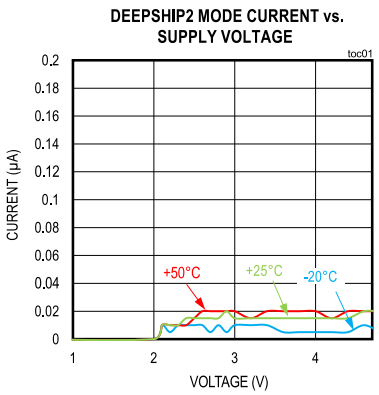

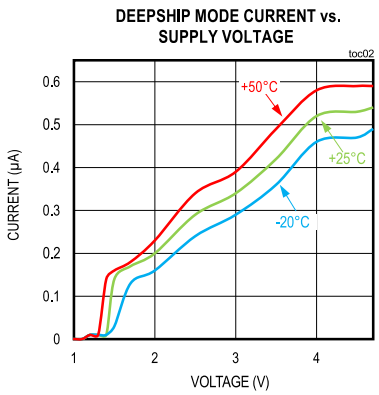

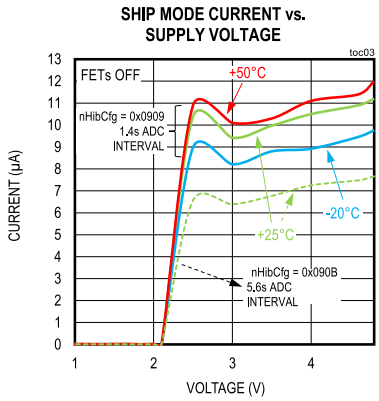

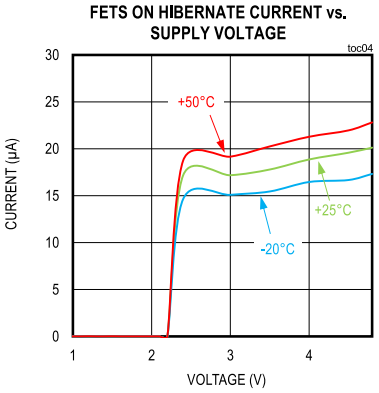

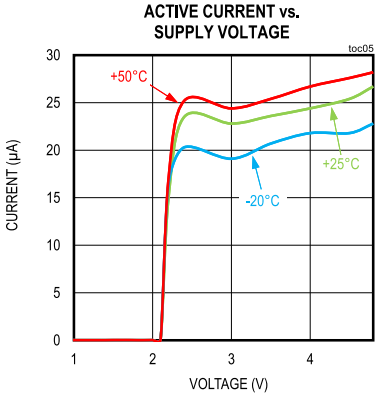

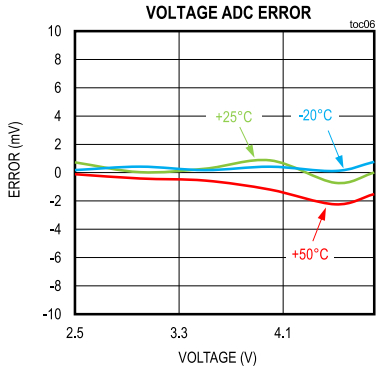

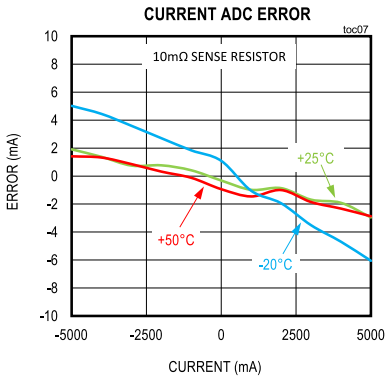

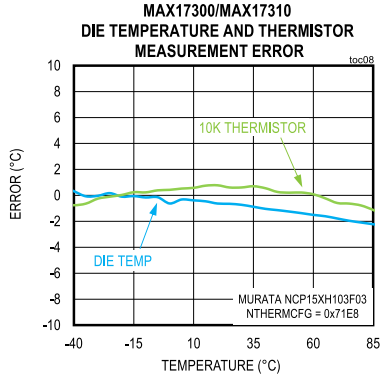

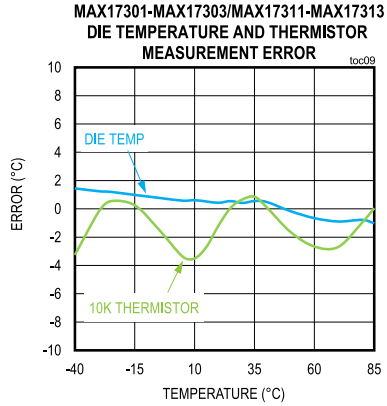

Typical Operating Characteristics (continued)

(T_A = +25°C, unless otherwise noted.)

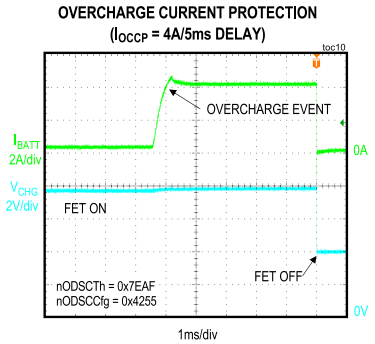

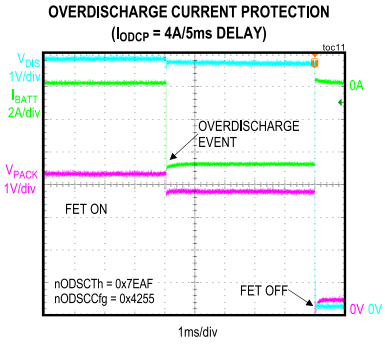

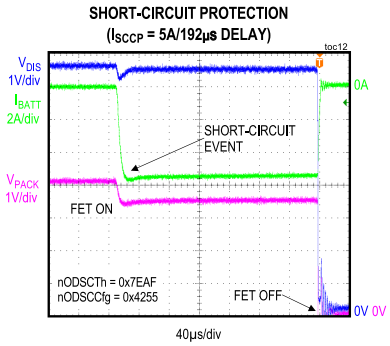

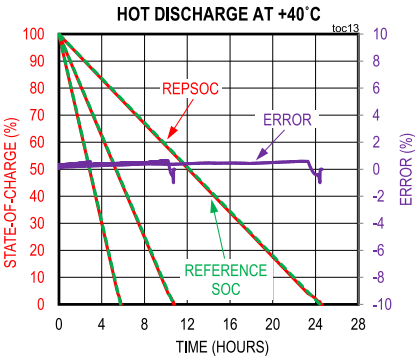

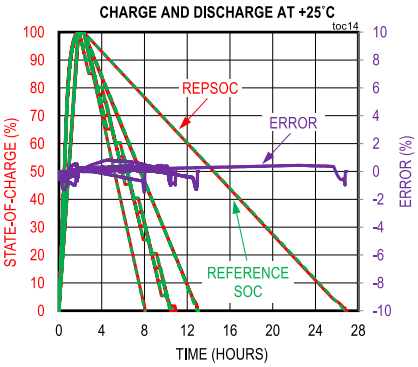

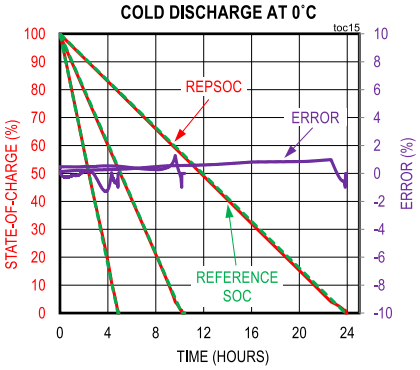

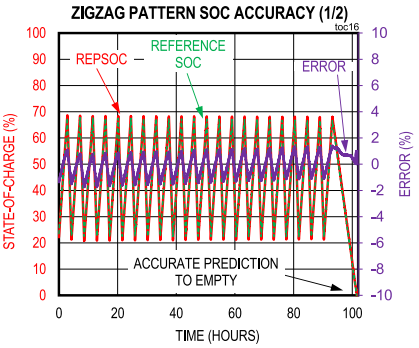

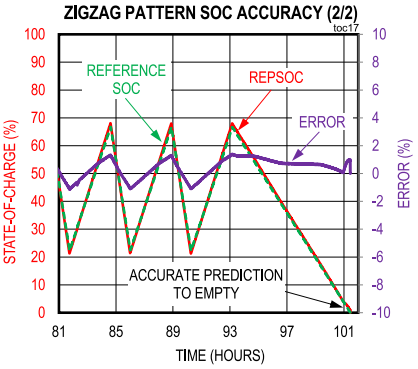

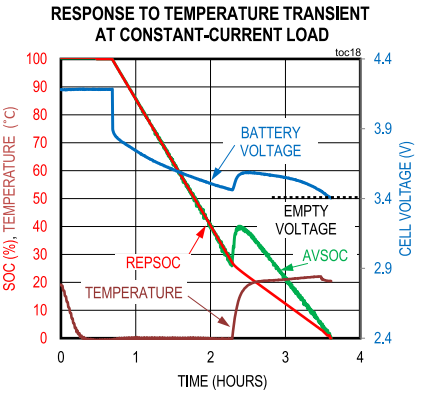

Typical Operating Characteristics (continued)

(T_A = +25°C, unless otherwise noted.)

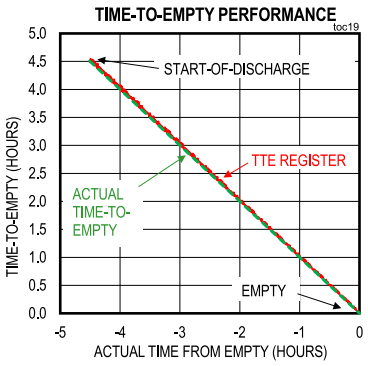

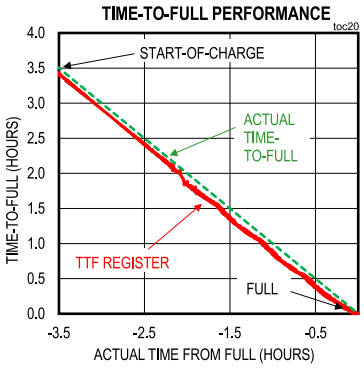

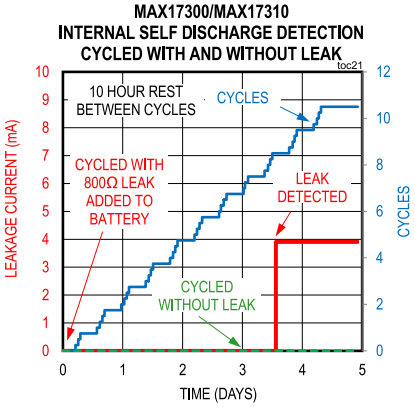

Pin Configurations

WLP

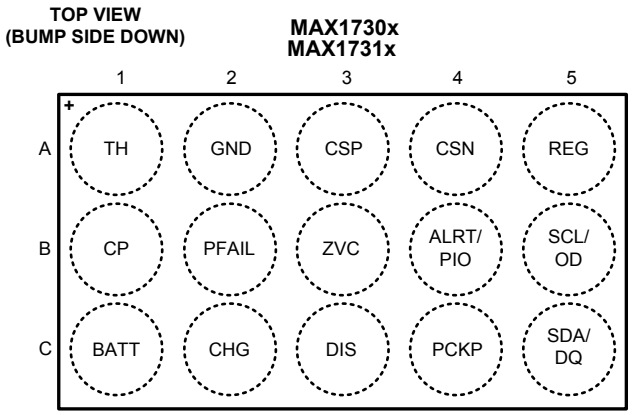

(3 x 5 WLP, 0.5mm PITCH)

TDFN

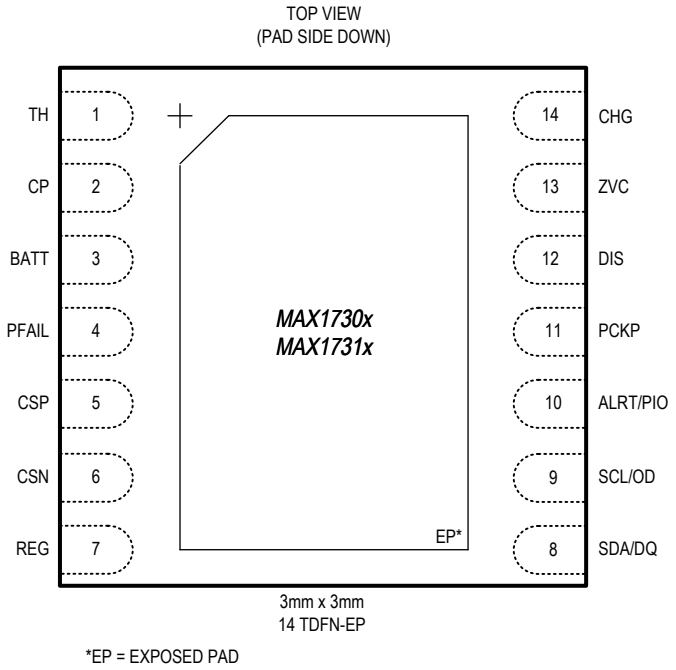

Pin Description

PIN		NAME	FUNCTION
WLP	TDFN		
A1	1	TH	Thermistor Connection. Connect an external 10kΩ or 100kΩ thermistor between TH and GND (CSP for TDFN) to measure the battery temperature. Leave disconnected or connect to BATT if not used.
B1	2	CP	Charge Pump Output. CP provides the voltage for driving external charge and discharge protection N-FETs. Connect a bypass 0.1µF capacitor between CP and BATT.
C1	3	BATT	Battery Connection. The MAX1730x/MAX1731x receives power from BATT and also measures and fuel gauges based on the voltage at BATT. Connect BATT to positive terminal of the battery with a 10Ω resistor and bypass with a 0.1µF capacitor to GND.
B2	4	PFAIL	Permanent Failure Indicator (Optional). MAX17300/01/10/11 Only. Connect to secondary protector (2-Level) to take action in case of primary FET failure detection. Disconnect if not used. All other devices connect to GND with a 1kΩ resistor.
A3	5	CSP	Current-Sense-Resistor Positive Input. Kelvin-connect to the Batt-side of an external sense resistor. CSP is IC GND for TDFN. Keep this trace short, wide, and low impedance.
A4	6	CSN	Current-Sense Negative Input. Kelvin connect to the pack-side of the sense resistor.

Pin Description (continued)

PIN		NAME	FUNCTION
WLP	TDFN		
A5	7	REG	1.8V Regulator. REG provides a 1.8V supply for the IC. Bypass with a 0.47µF capacitor between REG and GND.
C5	8	SDA/DQ	Serial Data Input/Output for both 1-Wire and I^2C Communication Modes. Open-drain output driver. Connect to the DATA terminal of the battery pack. DQ/SDA has an internal pulldown (IPD) for sensing pack disconnection.
B5	9	SCL/OD	Serial Clock Input for I^2C Communication or Speed Selection for 1-Wire Communication. Input only. For I^2C communication, connect to the clock terminal of the battery pack. Connect to CSN for standard speed 1-wire communication. Connect to REG pin for overdrive 1-wire communication. OD/SCL has an internal pulldown (IPD) for sensing pack disconnection.
B4	10	ALRT/PIO	Alert Output. ALRT is open-drain and active-low. Connect an external pullup resistor to indicate alerts. See the *Alerts* section for more details. *Pushbutton Wakeup*. Connect to the host-system's power button to GND without any external pullup since the IC has an internal pullup. The IC wakes up from shutdown mode when the button is pressed.
C4	11	PCKP	Pack Positive Terminal. PCKP is the exposed terminal of the pack for charger detection and over-current fault removal detection.
C3	12	DIS	Discharge FET Control. DIS enables/disables battery discharge by driving an external N-FET between CP and GND.
B3	13	ZVC	Zero-Volt Charge Recovery Enable. Connect to GND to enable zero-volt charge recovery. Disconnect or connect 1MΩ to GND to disable function.
C2	14	CHG	Charge FET Control. CHG blocks/allows battery charge by controlling an external N-FET between CP and BATT.
A2	—	GND	IC GND. Connect to CSP side of sense resistor.
—	EP	Exposed Pad	Connect to CSP for normal operation.

Functional Diagram

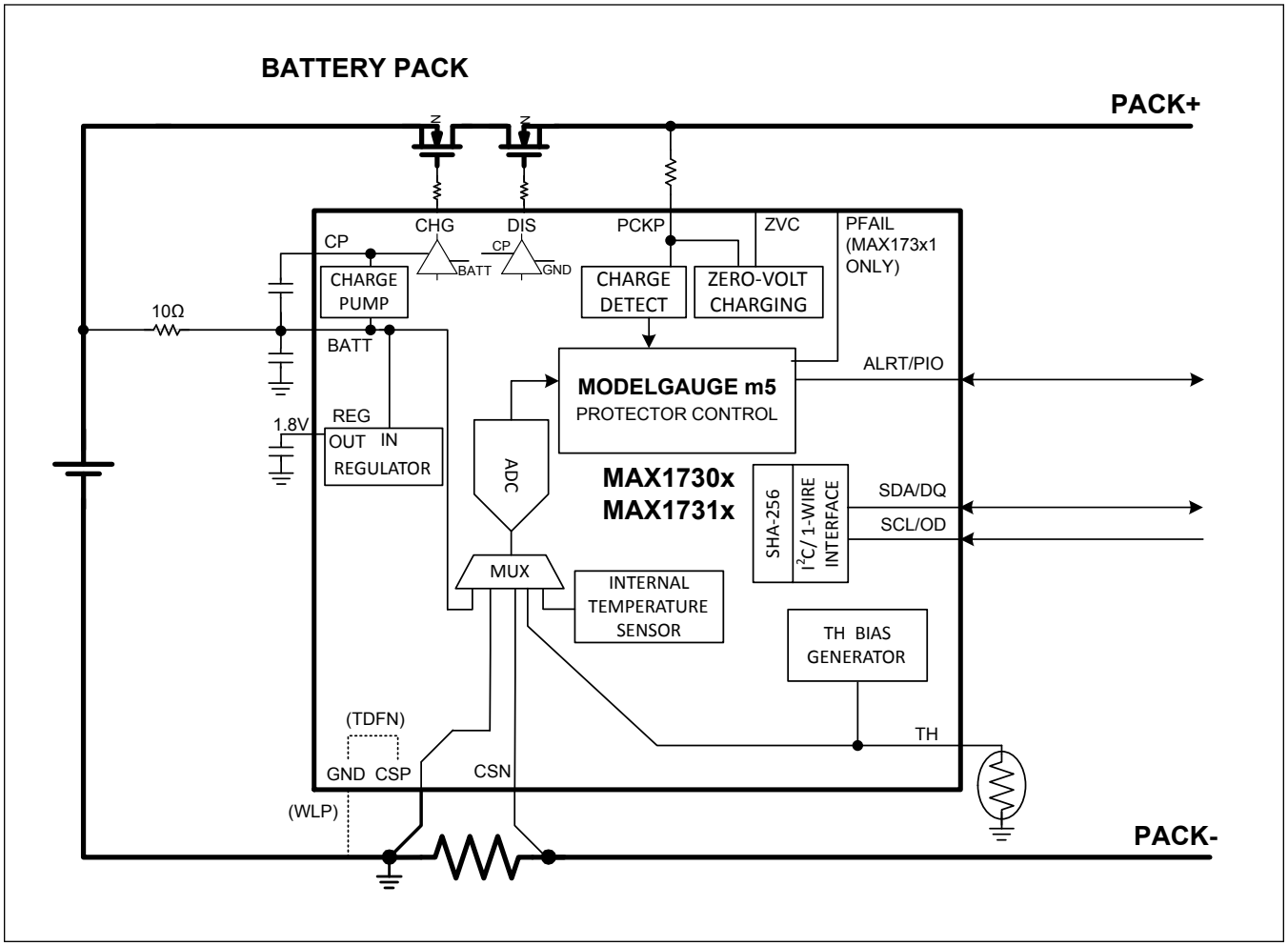

Detailed Description

General Description

The MAX1730x/MAX1731x is a family of 24µA I_Q stand-alone pack-side fuel gauge ICs with protector and SHA-256 authentication for 1-cell lithium-ion/polymer batteries which implements Maxim's ModelGauge m5 algorithm without requiring host interaction for configuration. This makes the MAX1730x/MAX1731x an excellent pack-side fuel gauge. The MAX1730x/MAX1731x monitors the voltage, current, temperature, and state of the battery to ensure that the lithium-ion/polymer battery is operating under safe conditions to prolong the life of the battery. Voltage of the battery pack is measured at the BATT connection. Current is measured with an external sense resistor placed between the CSP and CSN pins. Power and average power are also reported. An external NTC thermistor connection allows the IC to measure temperature of the battery pack by monitoring the TH pin. The TH pin provides an internal pull-up for the thermistor that is disabled internally when temperature is not being measured. Internal die temperature of the IC is also measured and can be a proxy for the protection FET temperature if they are located close by the IC.

The MAX1730x/MAX1731x provides programmable discharge protection for overdischarge currents (fast, medium, and slow protection), overtemperature, and undervoltage. The IC also provides programmable charge protection for overvoltage, over/undertemperature, overcharge currents (fast and slow), charge done, charger communication timeout, and overcharge capacity fault. The IC provides ideal diode discharge behavior even while a charge fault persists. The IC provides programmable charging current/voltage prescription following JEITA temperature regions as well as step-charging. The MAX17300/MAX17301/MAX17310/MAX17311 provides additional protection to permanently disable the battery by overriding a secondary protector or blowing a fuse in severe fault conditions. This is useful when the IC has detected FET failure and is unable to block charge/discharge any other way. Additional functionality is described in the *Protector* section.

The IC supports three low-power modes: deepship2 (IQ_{DS2}), deepship (IQ_{DS}), and ship (IQ_S). The IC can enter these low-power modes by command, communication collapsed (if enabled), or undervoltage shutdown. The IC can wake up from these low-power modes by communication, charger detection, or pushbutton wakeup (if enabled and installed). Pushbutton wakeup allows a pack to completely disconnect from a system during shipping, yet wakeup immediately upon the user pressing the button, not needing the user to plug in a charger.

The ModelGauge m5 algorithm combines the short-term accuracy and linearity of a coulomb counter with the long-term stability of a voltage-based fuel gauge, along with temperature compensation to provide industry-leading fuel-gauge accuracy. Additionally, the algorithm does not suffer from abrupt corrections that normally occur in coulomb-counter algorithms, since tiny continual corrections are distributed over time. The MAX1730x/MAX1731x automatically compensates for aging, temperature, and discharge rate and provides accurate state of charge (SOC) in milliampere-hours (mAh) or percentage (%) over a wide range of operating conditions. Fuel gauge error always converges to 0% as the cell approaches empty. Dynamic power functionality provides the instantaneous maximum battery output power which can be delivered to the system without violating the minimum system input voltage. The IC provides accurate estimation of time-to-empty and time-to-full and provides three methods for reporting the age of the battery: reduction in capacity, increase in battery resistance, and cycle odometer. In addition, age forecasting allows the user to estimate the expected lifespan of the cell.

To prevent battery clones, the IC integrates SHA-256 authentication with a 160-bit secret key (MAX17300/01/02/10/11/12 Only). Every IC also incorporates a 64-bit unique identification number (ROM ID). Additionally, up to 122 bytes of user memory (NVM) can be made available to store custom information.

Communication to the host occurs over a Maxim 1-Wire (MAX17310-MAX17313) or standard I^2C interface (MAX17300-MAX17303). OD/SCL is an input from the host, and DQ/SDA is an open-drain I/O pin that requires an external pullup. The ALRT1 pin is an output that can be used as an external interrupt to the host processor if certain application conditions are detected.

For additional reference material, refer to the following Application Notes:

Application Note 6807: *MAX1730x/MAX1731x Host Software Implementation Guide*

Application Note 6954: *MAX1730x/MAX1731x Battery Pack Implementation Guide*

Protector

Lithium-ion/polymer batteries are very common in a wide variety of portable electronic devices because they have very high energy density, minimal memory effect and low self-discharge. However, care must be taken to avoid overheating or overcharging these batteries to prevent damage to the batteries potentially resulting in dangerous outcomes/explosive results. By operating in safe temperature ranges, at safe voltages and under safe current levels, the overall safety of the lithium-ion/polymer batteries can be assured throughout the life of the battery.

Simple protection schemes are available to protect a battery from exceeding the safe levels. These schemes include protection for overdischarge current, short-circuit current, over-charge current, undervoltage and overvoltage. The next level of protection offers smart protection schemes which include protection for long overdischarge current, overtemperature limits for charge and discharge, undertemperature charge limits, and charge-done protection. The MAX1730x/MAX1731x provides all of these simple and smart protection schemes with programmable thresholds and programmable timer delays for each fault.

The MAX1730x/MAX1731x provides additional protection functionality beyond these schemes including:

Discharging Protection Functionality

- **Overcurrent:** (see *nODSCCfg* and *nODSCTh*)
  - **Fast Short-Circuit (70µs to 985µs):** The short-circuit comparator is programmable from 5mV to 155mV with delay programmable from 70µs to 985µs.
  - **Medium (1ms to 15ms):** The overdischarge current comparator is programmable from 2.5mV to 77.5mV with delay programmable from 1ms to 15ms.
  - **Slow (351ms to 23s):** Slow overdischarge protection is programmable from 0mV to 51.2mV in 0.2mV steps with delay programmable from 351ms to 23s (see *nDelayCfg*).
- **Overtemperature:**
  - **Hot (OTPD—Overtemperature Discharge):** Discharge overtemperature (OTPD, see *nProtMiscTh*) is separately programmable from charge overtemperature (OTPC). OTPD is typically a higher temperature than OTPC, since charging while hot is more hazardous than discharging. OTPD is programmable in 1°C steps, with a programmable timer (see *nDelayCfg*).
  - **Die-Hot:** The MAX1730x/MAX1731x measures die temperature as well as a thermistor's temperature. Since the IC is generally located close to the external FETs, the die temperature can indicate when the FETs are overheating. This separately programmable threshold (see *nProtMiscTh*) blocks both charging and discharging.
  - **Permanent-Fail-Hot:** When a severe overtemperature is detected, the fault is recorded into NVM and permanently disables the charge and discharge FETs (see *nTPrtTh3*).
- **Undervoltage:** Undervoltage is protected by three thresholds: UVP (undervoltage protect), UVShdn (undervoltage shutdown), and UOCVP (under OCV protect—*SmartEmpty*). UOCVP provides a deep-discharge-state protection that is immune from load and cell impedance/resistance variations.

Charging Protection Functionality:

- **Overvoltage Protection (OVP):** Overvoltage protection is programmable with 10mV resolution (see *nJEITACfg*). Temperature-region dependent OVP protection is also provided for cold/room/warm and hot temperature regions (see *nJEITAV*). OVP detection is debounced with a programmable timer (see *nDelayCfg*). An additional, higher OVP permanent failure threshold is programmable, which records any excessive OVP into NVM and permanently blocks charging.
- **Charge Temperature Protection:** Temperature protection thresholds are debounced with a programmable timer (see *nDelayCfg*).
  - **Hot (OTPC):** Charging temperature protection is programmable with 1°C resolution (see *nTPrtTh1*) and 2°C hysteresis.
  - **Cold (UTP):** Charging is blocked at cold, programmable with 1°C resolution (see *nTPrtTh1*) and 2°C hysteresis.
- **Overcharge-Current Protection:**
  - **Fast:** Overcharge current is detected by a programmable hardware comparator and debounce timer between 0 to 38.75mV and 1ms to 15ms thresholds.
  - **Slow:** A lower and slower overcharge current protection ensures that more moderate high currents do not persist

for a long time. With a 10mΩ sense resistor, this is programmable up to 5.12A in 40mA steps, with an additional delay programmable between 0.35s and 22.5s. Additionally, with *nNVCfg1*.enJP = 1, this overcurrent protection threshold is modulated according to temperature region (see *nJEITAC*).

- **Charger-Communication Timeout:** If enabled, during charging the IC turns off the charge FET if the host has stopped communicating beyond a timeout configurable from 11s to 3 minutes. In systems which consult the battery for prescribing the charge current or charge voltage, especially to apply JEITA thresholds or step-charging, this feature is useful to protect against operating system crash or shutdown.
- **Overcharge-Capacity Fault:** If any charge session delivers more charge (coulombs) to the battery than the expected full design capacity, charging is blocked, if the feature is enabled. This threshold is programmable as a percentage (see *nProtMiscTh*.QOvflwTh) beyond the design capacity.

Other Faults:

- **Nonvolatile CheckSum Failure:** If enabled (*nNVCfg1*.enProtChkSm), the MAX1730x/MAX1731x blocks charge and discharge when startup checksum of protector NVM does not match the value stored in nCheckSum.

Other Protection Functionality:

- **Zero-Volt Charging:** The IC is able to begin charging when the cell has depleted to 1.8V (ZVC disabled) or even 0.0V (ZVC enabled). See the *Zero-Volt Charging* section for more details.
- **Overdischarge-Removal Detection:** Following any overdischarge current fault, after the IC turns off the discharge FET, it tests the load to detect the removal/disconnection of the offending load by sourcing 30µA into PCKP. Load removal is detected when PCKP exceeds 1V. This low threshold is intentionally below the startup voltage of most ICs in order to allow active loads by external ICs while rejecting passive loads by resistors (short-circuit, failed components, etc.).
- **Battery Internal Self-Discharge Detection:** The IC (MAX17300/MAX17310 only) measures the internal self-discharge of the battery that might indicate health or safety problems. The IC alerts the system or turns off the charge and discharge FETs when a leakage is detected above the configurable threshold. See the *Battery Internal Self-Discharge Detection (ISD) (MAX17300/MAX17310 Only)* section for more details.
- **Charger Removal Detection:** Following any charge fault, after the IC turns off the charge FET, it tests PCKP to detect the removal of the offending charger by connecting 40kΩ from PCKP to GND. Charger removal is detected when PCKP falls below BATT + 0.1V or whenever discharge current is detected.
- **Ideal-Diode Control:** During any charge fault, the charge FET turns on when a discharge current is detected, with up to 350ms delay. The discharge FET behaves the same way during discharge faults to block discharging, yet turns on during charging. This ideal diode behavior reduces the heat and voltage drop associated with the body diode during protection faults.

Protection Fault Reporting:

- **Protection Fault Status:** Each charge and discharge fault state is latched in the *ProtStatus* register. When the fault is cleared, the corresponding bit is cleared.
- **Protection Fault Alerts:** The *ProtAlrt* register latches the status of any previous faults detected by the device. Once a fault is detected, the corresponding bit remains set until it is cleared by the host. Additionally, the Status.ProtAlrt bit is set when any ProtAlrt bit is set.
- **Protection Fault Logging:** The *nFaultLog* register indicates which protection events happened during each history log period.

Charging Prescription Registers: The *ChargingVoltage* and *ChargingCurrent* registers can guide the charger according to recommended charging profile. This can include the following knowledge which generally is associated with a particular battery and may be stored in the battery with the MAX1730x/MAX1731x:

- **Factory Recommended Charging Current and Voltage:** This is useful when a system involves multiple battery vendors, swappable batteries, or legacy system support.
- **Charging Modifications According to Battery Temperature:** Significantly above and below room temperature, most cell manufacturers recommend to charge at reduced current and lower termination voltage to assure safety and improve lifespan. The MAX1730x/MAX1731x can be configured to modulate its guidance according to TooCold/Cold/Room/Warm/Hot/TooHot programmable temperature regions (see *nTPrtTh1*/2/3). Both charging current and voltage are modulated at Cold/Warm/Hot, generally targeting lower than Room (see *nJEITAV* and *nJEITAC*).
- **Step-Charging:** A common practice to balance lifespan and charge speed is to apply step-charging profiles (see the *Step-Charging* section). The MAX1730x/MAX1731x supports three programmable steps with programmable charge currents and voltages.

At a high level, the MAX1730x/MAX1731x protector has state-machine as shown in Figure 1. Each charge and discharge fault state is latched in the *ProtStatus* register, where each fault obeys a separate instance of the state machine shown in Figure 1.

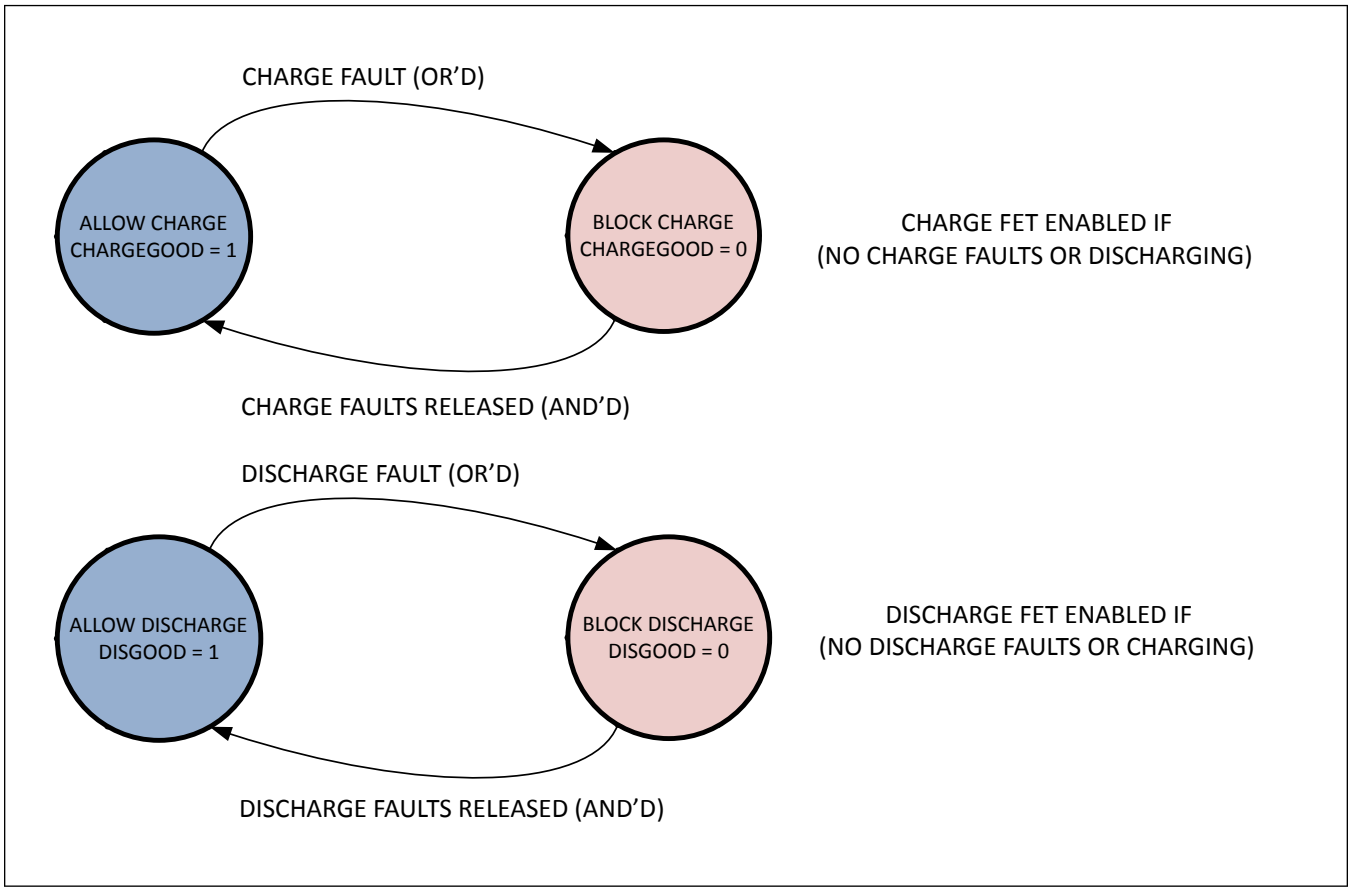

Figure 1. Simplified Protector State Machine

Note: Due to the highly configurable protection thresholds, the MAX1730x/MAX1731x must be locked when deployed into the field to prevent accidental overwrites or intentional tampering that may result in hazardous conditions. See the *Memory Locks* section for more details.

The protector registers are summarized by their protection function in Table 1 and are graphically shown across the various temperature ranges in Figure 2 and Figure 3.

Table 1. Summary of Protector Registers by Function

FUNCTION	REGISTER
Voltage Thresholds	
Permanent Fail Overvoltage Protection	nVPrtTh2
Overvoltage Protection	nJEITAV, nJEITACfg
Overvoltage Protection Release	nJEITACfg
UnderOCV Protection	nVPrtTh1
Undervoltage Protection	nVPrtTh1
Undervoltage Shutdown	nVPrtTh1
Current Thresholds	
Fast Overcharge Protection	nODSCTh, nODSCCfg
Slow Overcharge Protection	nIPrtTh1
Slow Overdischarge Protection	nIPrtTh1
Fast Overdischarge Protection	nODSCTh, nODSCCfg
Short Circuit Protection	nODSCTh, nODSCCfg
Charging Detected	nProtMiscTh
Discharging Detected	nProtMiscTh
Temperature Thresholds	nTPrtTh1, nTPrtTh2, nTPrtTh3, nProtMiscTh
Fault Timers	nDelayCfg
Charging Prescription	
Charging Voltage	nJEITAV
Charging Current	nJeitaC
Precharge Current	nJEITACfg
Step Charging	nStepChg
Protection Status/Configuration	nProtCfg, ProtStatus, nBattStatus

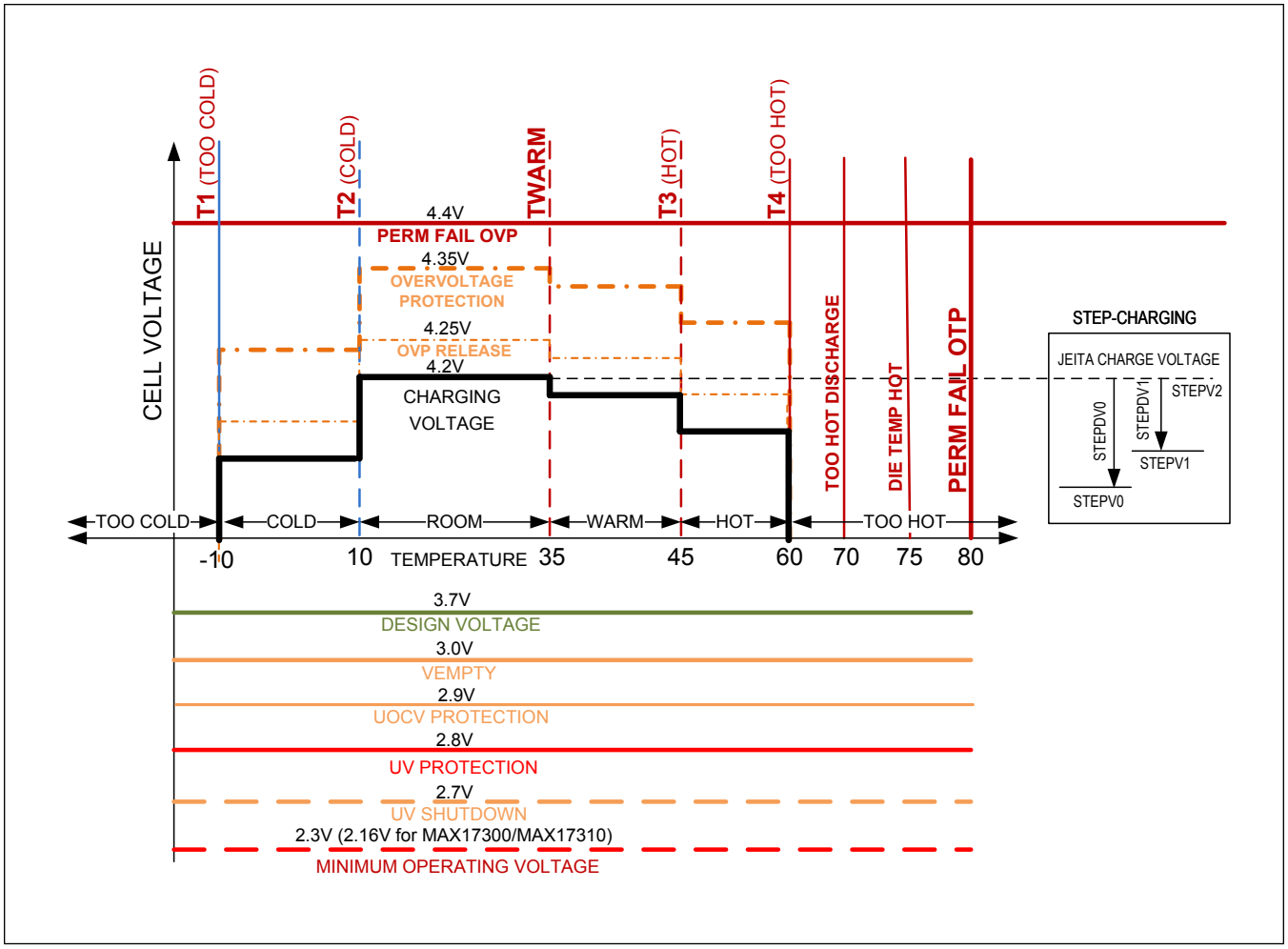

Figure 2. Programmable Voltage Thresholds

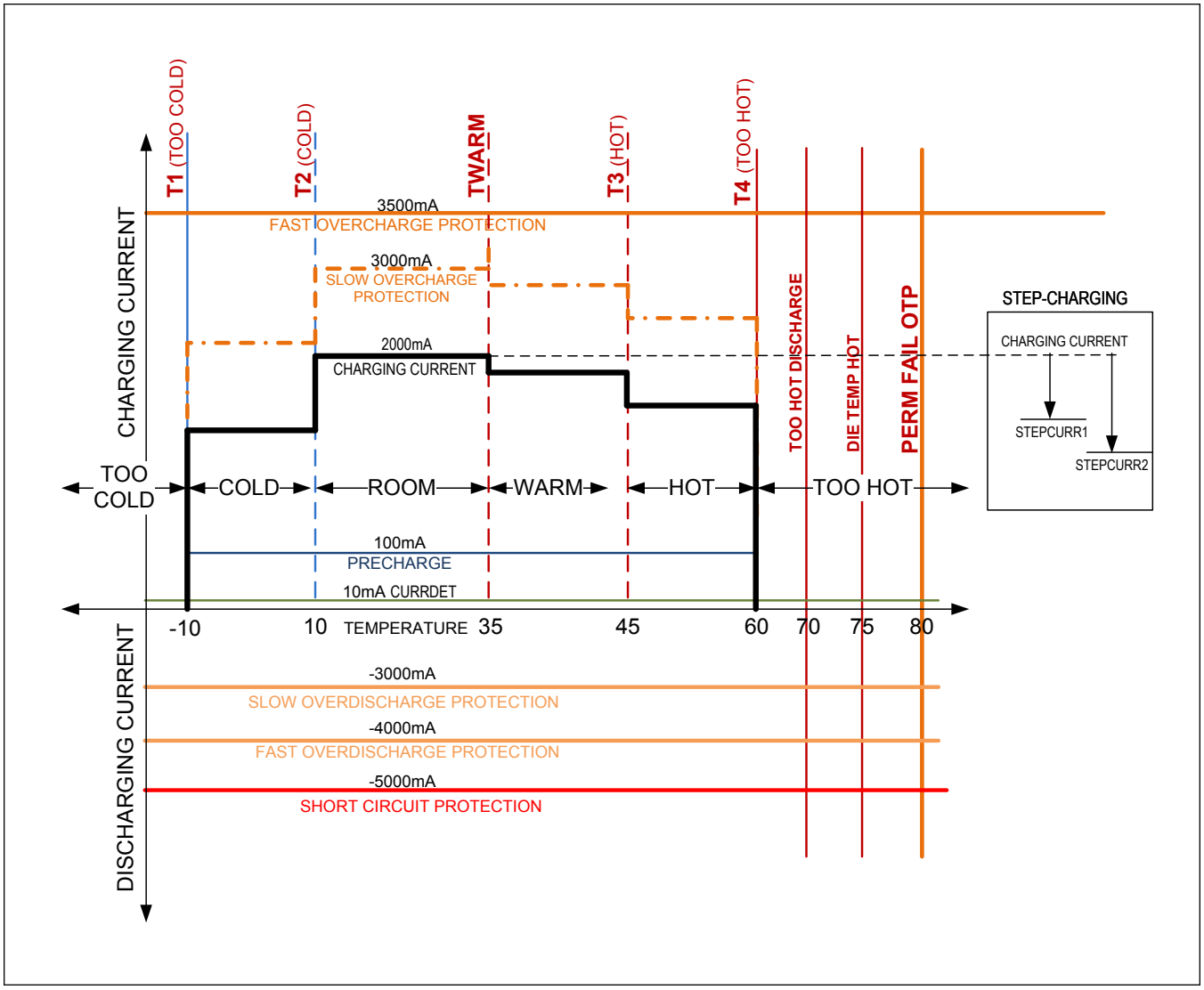

Figure 3. Programmable Current Thresholds

Protector Thresholds

The MAX1730x/MAX1731x provides for a variety of programmable protector thresholds that are stored in nonvolatile memory. These thresholds include voltage, current, temperature, and timer delays.

Voltage Thresholds

All voltage thresholds of the MAX1730x/MAX1731x are shown graphically in Figure 2 and in table form with details of which bits and registers create the various thresholds in Table 2. The description of each register provides additional guidance for selection of the register value.

Table 2. Voltage Thresholds

NAME	DESCRIPTION	CONFIGURATION REGISTERS	EXAMPLE
Permanent Fail Overvoltage		nVPrtTh2.OVP_PermFail	4.4V
Overvoltage (with 4xJEITA)	Programmable overvoltage at each JEITA band. Programmable 10mV resolution from 3.9V to 4.88V. Programmable delay.	ChargeVoltage[temp] + nJEITACfg.dOVP	{4.1V/4.20V/4.18/ 4.15V} +50mV
Overvoltage Release	Programmable release hysteresis. Release fault when voltage drops below this threshold and discharging is detected.	Overvoltage - JEITACfg.dOVPR	{4.15V/4.25V/ 4.23V/4.2V} -10mV
ChargeVoltage-Room	ChargingVoltage() output	nJEITAV.Room	4.20V
ChargeVoltage-Hot	ChargingVoltage() output	nJEITAV.Hot	4.15V
ChargeVoltage-Warm	ChargingVoltage() output	nJEITAV.Warm	4.18V
ChargeVoltage-Cold	ChargingVoltage() output	nJEITAV.Cold	4.10V
DesignVoltage	Just for information, no action	nDesignVolt	3.7V
EmptyVoltage	For fuel gauge only (not related to protection)	nVEmpty	3.0V
Undervoltage Release	Charger applied		
Under OCV Protection (SmartEmpty)	Programmable under-OCV 40mV steps UVP to UVP + 1.28V.	nVPrtTh1.UOCVP	3.2V
Undervoltage Protection	Programmable undervoltage 20mV steps 2.2V to 3.4V. Gauging and communications work until undervoltage-shutdown	nVPrtTh1.UVP	2.7V
Undervoltage Shutdown	Gauging and communications work until undervoltage-shutdown	nVPrtTh1.UVShdn	2.5V
Undervoltage Lockout			2.11V typ, 2.16V max (MAX17300/ MAX17310) 2.1V typ, 2.3V max
Low-Voltage Charging			1.8V
Zero-Voltage Charging			0.0V

Ideal Diode Behavior

The IC uses several methods to detect charge and discharge to provide the following "Ideal Diode" discharge control without forgetting a possible charge fault state such as OVP, OTP, or UTP (overcharge current is fully released during a discharge condition).

1. **Fast On**. When discharge is detected, the CHG FET quickly turns on regardless of any charge fault condition. This limits the heat and voltage drop associated with the 0.6V CHG FET body diode.
    1. **Current < -CurrDet.** nProtMiscTh.CurrDet is normally configured to 2 to provide a clear threshold relative to ADC noise. With a 10mΩ sense resistor, this corresponding to 7.5mA, provides sufficient sensitivity for most active loads.
    2. **PCKP < BATT +0.1V (falling only).** Additionally, a comparator detects charger removal to support better discharging detection even during small standby currents.
2. **Fast Off**. When discharge to charge transition is detected while a charge fault (such as OTP/OVP/UTP) remains latched, the CHG FET quickly turns off to prevent charging. Since the charge fault remains remembered (not released by the discharging), the response happens quickly without waiting for double-confirmation by the fault timer.
3. **Slow On**. Smaller standby currents require the sensitivity provided by the filter of the AvgCurrent register.
    1. **AvgCurrent < -AvgCurrDet**. For default configuration and with 10mΩ, AvgCurrDet is sensitive to 1.4mA discharge. The AvgCurrDet threshold follows the filter configuration nFilterCfg.Curr as well as the hibernate state and configuration according Table 3 when using default nProtMiscTh.CurrDet = 7.5mA.

Table 3. AvgCurrDet Threshold When Using 10mΩ and Default nProtMiscTh.CurrDet = 7.5mA

	AVGCURRENT FILTER CONFIGURATION (nFilterCfg.Curr)							
	1 (0.7s)	2 (1.4s)	3 (2.8s)	4 (5.6s)	5 (11.25s)	6 (22.5s)	7 (45s)	8 (90s)
Active (0.351s)	4.22mA	2.34mA	2.34mA	1.41mA	1.41mA	0.94mA	0.94mA	0.7mA
Hibernate (1.4s)	7.5mA	4.2mA	4.2mA	2.3mA	2.3mA	1.4mA	1.4mA	0.94mA
Hibernate (2.8s)	7.5mA	7.5mA	7.5mA	4.2mA	4.2mA	2.3mA	2.3mA	1.4mA

4. **Slow Off. AvgCurrent > -0.3mA.** While the Charge Fault remains, the CHG FET turns off whenever AvgCurrent fails to exceed the more sensitive -0.3mA discharge threshold.

The fast responses in Table 3 correspond with the 0.351s ADC update rate. The more accurate slow responses correspond with the AvgCurrent filter delay configuration.

Current Thresholds

All of the current thresholds of the MAX1730x/MAX1731x are shown graphically in Figure 3 and in table form with details of each threshold in Table 4. The description of each register provides additional guidance for selection of the register value.

Table 4. Current Threshold Summary

CURRENT	ACTION	RELEASE	DETAILS
Overcharge Current (fast)	CHG off	Discharging or charger removal detection	Threshold 5-bit, 1.25mV steps to 38.75mV. Delay programmable 4-bit, 1ms to 15ms in 0.9ms steps.
Overcharge Current (slow with 4xJEITA)	CHG off		Programmable 0.4mV steps to 51.2mV. Delay programmable 351ms to 45s. Separate thresholds for 4 out of 6 JEITA segments.
Overdischarge Current (fast)	DIS off	Charging or load removal detection	5-Bit, 2.5mV steps to 77.5mV. Delay programmable 4-bit, 1ms to 15ms in 0.9ms steps.
Overdischarge Current (slow)	DIS off		Programmable 0.4mV steps to 51.2mV. Delay programmable 351ms to 45s.
Short-Circuit Current	DIS off		5-Bit, 5mV steps to 155mV. Delay programmable 4-bit, 70µs steps to 985µs.
Charging Detected	Normal		Current > CurrDet or AvgCurrent > AvgCurrDet or PCKP > BATT + 0.15V to release overdischarge protection.
Discharging Detected	Normal		Current < -CurrDet or AvgCurrent < -AvgCurrDet or PCKP < BATT + 0.15V (falling-edge) indicates discharging. When discharging is detected, overcharge current faults release. Other charge faults such as OVP, OTP, UTP remain set, however, the CHG FET turns on to prevent the heat and voltage drop associated with the 0.6V CHG FET body diode. See the Ideal Diode Behavior section for more details. An OVP fault remains remembered (unreleased) until voltage falls and discharging is also detected.

Overcurrent Protection

The MAX1730x/MAX1731x provides three levels of protection for overdischarge current events: fast, medium, and slow as shown in Figure 4. The MAX1730x/MAX1731x also provides fast and slow levels of protection for overcharge current protection. The fast and medium levels of protection are provided by comparators and the slow levels are based on the ADC readings.

The MAX1730x/MAX1731x maintains the protection until the source of the fault has been removed. Overcharge protection fault releases when pack voltage falls below BATT + 0.1V (edge, not level) while the IC tests charger removal by applying a 40kΩ pull down from PCKP to GND (during any charger fault). Overdischarge current (fast or slow) or short-circuit current protection faults release when PCKP rises above 1V, while the IC applies 30µA source current test to PCKP.

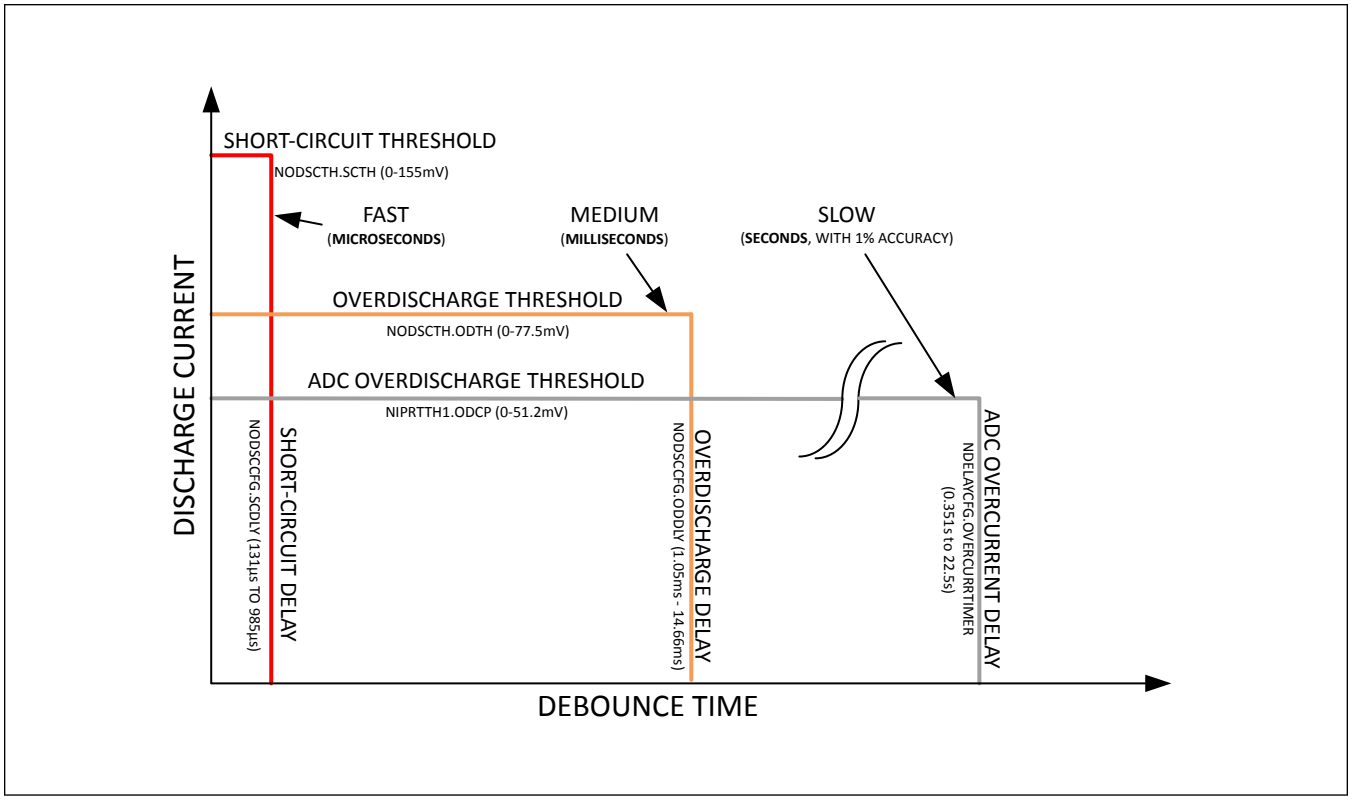

Figure 4. Fast, Medium, and Slow Overdischarge Protection

Fast Overcurrent Comparators

The MAX1730x/MAX1731x contains three programmable fast overcurrent comparators called Overdischarge (OD), Short-Circuit (SC), and Overcharge (OC) that allow control protection for overdischarge current, short-circuit current, and overcharge current. These comparators have programmable threshold levels and programmable debounced delays. See Figure 5.

The OD comparator threshold can be programmed from 0mV to -77.5mV with 2.5mV resolution (0 to -7.75A with 0.25A resolution using 10mΩ sense resistor). The OC comparator threshold can be programmed from 0mV to 38.75mV with 1.25mV resolution (0 to 3.875A with 0.125A resolution using 10mΩ sense resistor). The OD and OC comparators have a programmable delay from 1.05ms to 14.6ms with 0.97ms resolution. The SC comparator threshold can be programmed from 0mV to -155mV with 5mV resolution (0 to -15.5A with 0.5A resolution using 10mΩ sense resistor), and has a programmable delay from 70µs to 985µs with a 61µs resolution.

The nODSCTh register sets the threshold levels where each comparator trips. The nODSCCfg register enables each comparator and sets their debounce delays. The nODSCCfg register also maintains indicator flags of which comparator has been tripped. These register settings are maintained in nonvolatile memory if the nNVCfg1.enODSC bit is set.

Overcurrent Comparator Diagram

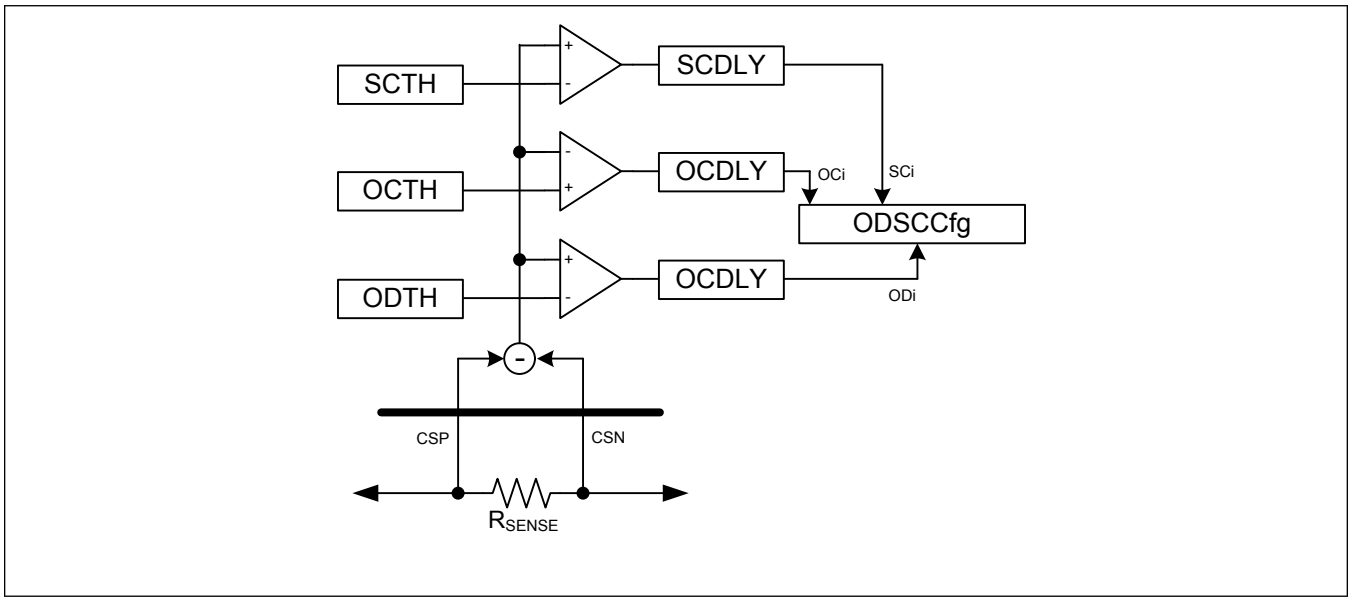

Figure 5. Overcurrent Comparator Diagram

Slow Overcurrent Protection

The MAX1730x/MAX1731x provides programmable thresholds for the slow overdischarge current protection (ODCP) and overcharge current protection (OCCP). ODCP and OCCP can be configured to provide different levels of protection across the six temperature zones as shown in Figure 3.

Temperature Thresholds

The six temperature zones shown in Figure 2 and Figure 3 can be configured in the nTPrtTh1, nTPrtTh2, and nTPrtTh3 registers.

Other Thresholds

Table 5. Other Thresholds

THRESHOLD	ACTION	CONDITIONS
Charge Suspend	CHG off	ChgWDT Fault—if enabled (nProtCfg.ChgWDTEn) and communications timeout.
Charge-Suspend Release	Normal	FullDet Release—Discharge or charger removal detected. ChgWDT Release—Communications or discharge or charger removal detected.
Charge FET Failure	Blow fuse	CHG off yet charge-current persists (programmable).
Discharge FET Failure	Blow fuse	DIS off yet discharge-current persists (programmable).
Charge Voltage/Current "Prescription"		Six-zone JEITA (four charge currents and voltages).

Battery Internal Self-Discharge Detection (ISD) (MAX17300/MAX17310 Only)

A healthy lithium-ion/polymer battery has a very high coulombic-efficiency, typically greater than 99.9% (defined as discharge mAh vs. charge mAh). Some portion of the charge capacity can be lost by internal self-discharge. This includes natural aging, which is exacerbated if the battery stays at a high temperature and/or high state for long periods of time. However, in a damaged battery, additional capacity can be lost (unavailable for discharge), and some portion of this reflects permanent capacity loss. Unusual self-discharge in a lithium-ion/polymer battery might indicate health or safety problems.

The MAX17300/MAX17310 internal self-discharge (ISD) detection feature measures battery leakage and provides the following functions:

- **Leakage Measurement**. The LeakCurrRep register outputs the milliampere leakage measured across many days and multiple charge termination events.
  - Accurate leakage detection
  - Low ppm false-positive rate at a 3mA threshold
  - Detection during normal use
    - No discharge depth or duration constraints
    - Requires at least four full events, each separated by 20 hours or more
- **Leakage Log.** Leakage measurements are recorded in the battery-life-logging data. This reveals leakage vs. time for any returned battery or for managing deployed packs.
- **Leakage Alert.** If enabled, when LeakCurrRep exceeds the programmable alert threshold, an LDET alert (see ProtAlrt) is asserted.
- **Leakage Fault.** If enabled, when LeakCurrRep exceeds the programmable fault threshold, the protector disconnects the battery.

Example of Internal Self-Discharge Detection

Figure 6 shows the current leakage the MAX17300/MAX17310 detect as a result of placing a 909Ω resistor across a cell to emulate a battery with internal self-discharge over various temperatures.

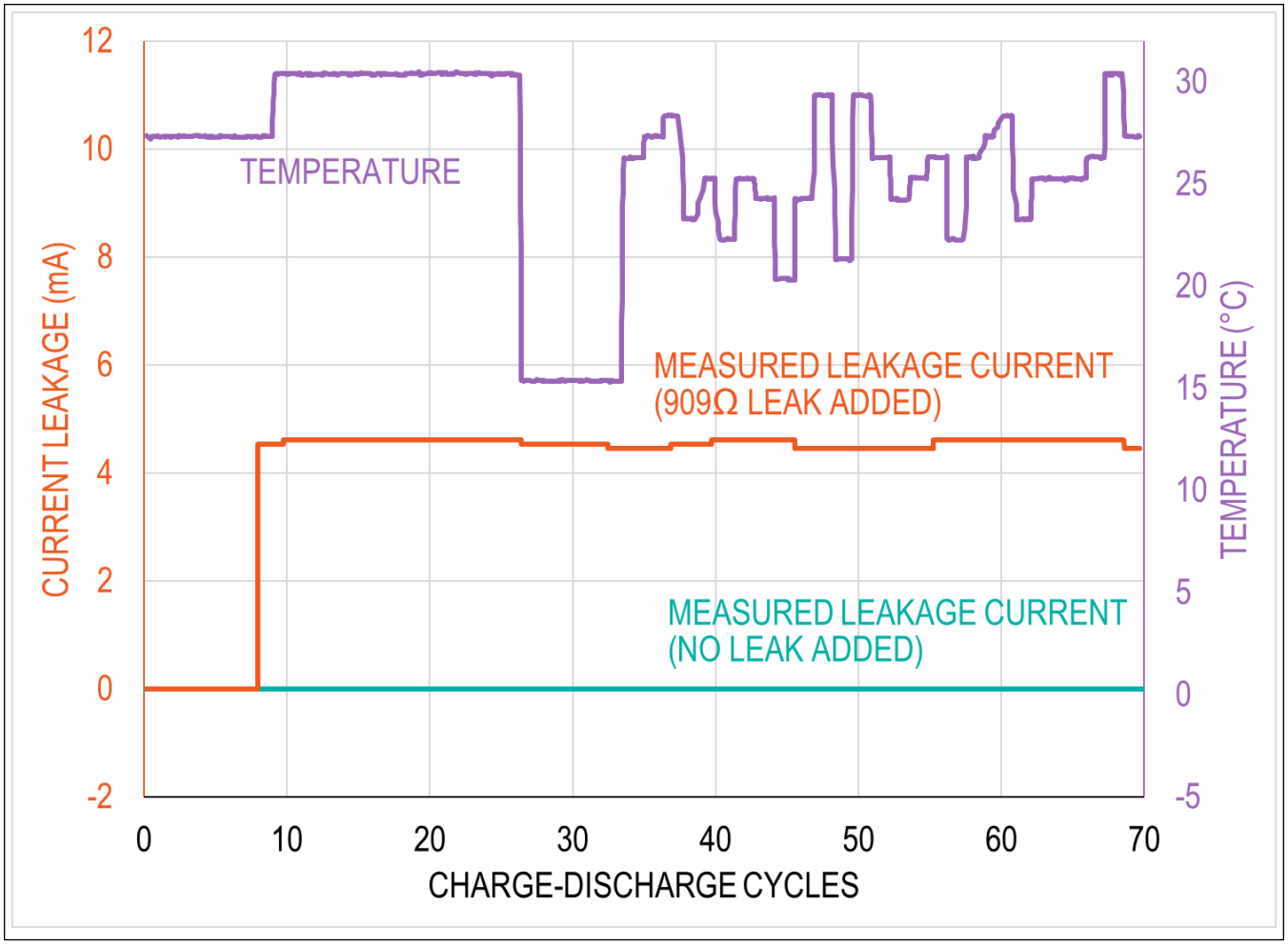

Figure 6. Example of Internal Self-Discharge with Temperature Variation

Configuring ISD

Contact Analog Devices for configuring the ISD feature. See the *Battery Internal Self-Discharge Registers* section for configuration details.

Permanent Failure

The MAX1730x/MAX1731x supports several types of faults which result in a permanent failure. When any enabled permanent failure is detected, both FETs turn off and remain off regardless of power-cycling. When any permanent failure fault is detected, the nBattStatus.PermFail bit and the specific fault bit (also in nBattStatus) are set and both FET drivers are put in the off state. Furthermore, the PFAIL output drives high to either drive an external fuse or latch a secondary protector. This action is useful when FET failure is detected because charge and discharge cannot be blocked in any other way.

The following permanent failure faults are supported whenever permanent failures are enabled (nProtCfg.PFEn = 1) and the condition persists longer than the Permanent Fail debounce timer (nDelayCfg.PermFailTimer):

- FET Failures: Enable/disable this feature by configuring nProtCfg.FetPFEn.
  - **DIS FET Shorted:** If discharging is detected during the discharge fault, nBattStatus.DFETFs is set and written to NVM.
  - **CHG FET Shorted:** If charging is detected during the charge fault, nBattStatus.CFETFs is set and written to NVM.

- FET Open Failure: If either FET is detected open by the following detection methods:
  - Detected By Discharge Fail: If DIS = On, V_{PCKP} < 1.5V, and discharge current is not detected, nBattStatus.FETFo is set and written to NVM.
  - Detected By Charge Fail: If CHG = On, DIS = On, V_{PCKP} > V_{BATT} + ChgDet, and charge current is not detected, nBattStatus.FETFo is set and written to NVM.

- Severe Overvoltage Failure: If any cell voltage exceeds nOVPrtTh.OVPPermFail, nBattStatus.OVPF is set and written to NVM. Disable by configuring nOVPrtTh.OVPPermFail to the maximum value of 5.12V (FF__h).
- Severe Overtemperature Failure: If temperature exceeds nTPrtTh3.TpermFailHot, nBattStatus.OTPF is set and written to NVM. Disable by configuring OTPPermFail to the maximum value of 127°C (7F__h).
- Nonvolatile Protector Checksum Failure: If enabled (nNVCfg1.enProtChkSum), during startup, a checksum of the protector configuration is calculated and compared against the nChkSum register. If the value mismatches, nBattStatus.ChkSumF is set.

Disabling FETs by Pin-Control or I²C Command

The IC provides FET override control by either I²C command or pin-command to the ALRT pin. This functionality can be useful for various types of applications:

- **Factory Testing**. Disconnecting the battery is useful for testing with a controlled external power supply.
- **Battery Selection.** In a multiple battery system, one battery can be disconnected and another connected by operating the FETs.

When allowed by nonvolatile configuration, both FETs can be turned off by pin control or either FET can be individually turned off by I2C command. The control operates as follows:

- **ALRT Pin Override**. Set nProtCfg.OvrdEn = 1 and drive ALRT low to force both FETs into the off state. Releasing the ALRT line recovers the FETs according to the protector's fault state machine.
- **I²C Command Override**. Set nProtCfg.CmOvrdEn = 1 and write CommStat.CHGOff or CommStat.DISOff to independently disable either the charge or discharge FET. Clearing CHGOff and DISOff recovers the FETs according to the protector's fault state machine.

These features may be disabled and locked by nonvolatile memory to prevent malicious code from blocking the FETs. Although disabling FETs does not produce any safety issue, it can be a nuisance if malicious system-side software denies power to the system.

Charging Prescription

The MAX1730x/MAX1731x can guide a charger with recommended charging voltage and charging current to safely charge the battery depending on the state of the battery and the temperature. The ChargingVoltage and ChargingCurrent registers provide the information according to the recommended charging based on knowledge that is installed in the battery under the principle that the battery maker knows the requirements best. This information can be stored in the MAX1730x/MAX1731x to provide the factory recommended charging current and voltage. This is useful when a system involves multiple battery vendors, swappable batteries, aftermarket batteries, or legacy system support.

As the temperature of the battery changes significantly above and below room temperature, most cell manufacturers recommend to charge at reduced current and lower termination voltage to assure safety and improve lifespan. The MAX1730x/MAX1731x can be configured to change its guidance according to TooCold/Cold/Room/Warm/Hot/TooHot programmable temperature regions (see nTPrtTh1/2/3). Both charging current and voltage are updated at Cold/Warm/Hot (see nJEITAV and nJEITAC). See Figure 2 and Figure 3.

Additionally, the IC provides step-charging to improve lifespan of the battery and charge speed by applying a step-charging profile (see the *Step-Charging* section) as shown in Figure 7.

Step Charging

A step-charging profile sets three charge voltages, three corresponding charge currents, and manages a state-machine to trace through the stages as shown in Figure 7.

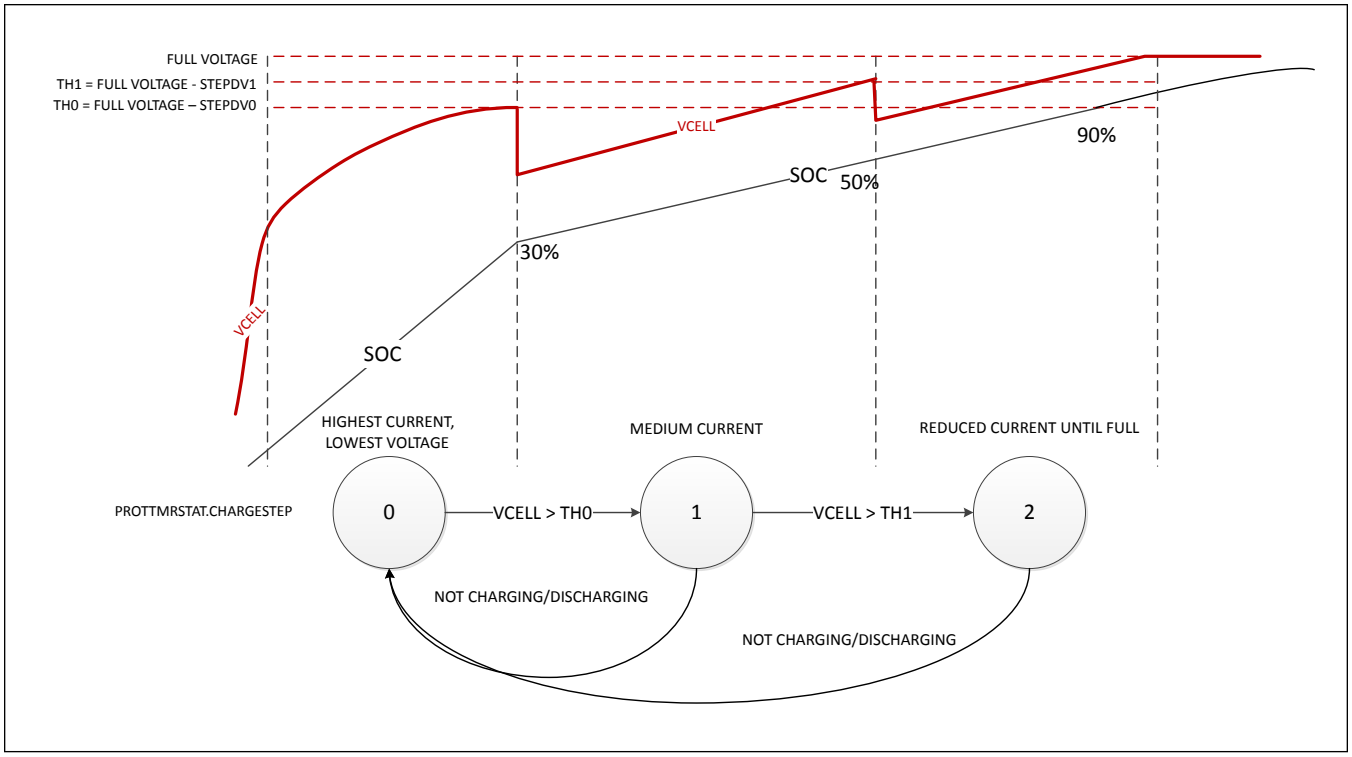

Figure 7. Step-Charging State Machine

This breaks charging into three regions:

Region 0: Highest current, lowest voltage. ChargingCurrent comes from nJEITAC until VCell > StepVolt0. After VCell > StepVolt0, ChargingCurrent becomes defined by Region 1.

Region 1: Medium current. ChargingCurrent comes from nJEITAC x (StepCurr1 + 1)/16, which is a ratio from 1/16 to 16/16 until VCell > StepVolt1. When VCell > StepVolt1, ChargingCurrent becomes defined by Region 2.

Region 2: Reduced current until full. ChargingCurrent comes from nJEITAC x (StepCurr2 + 1)/16, which is a ratio from 1/16 to 16/16 until full.

For example, a charge may start with a ChargingCurrent of 2000mA until the cell voltage reaches 4.12V. At that point, the ChargingCurrent is reduced to 1000mA until the cell voltage reaches 4.16V. Then, the ChargingCurrent is further reduced to 500mA where it remains until the current begins to taper off naturally to the termination current.

Zero-Volt Charging

When in undervoltage protection, the MAX1730x/MAX1731x turns both FETs off and then enters a low quiescent state. After a long time in the undervoltage state, it is possible for the battery voltage to fall below the minimum 2.3V (2.16V for MAX17300/MAX17310) operating voltage, making it unable to wakeup by communications or pushbutton. In this situation, an external charge voltage must be applied to PCKP in order to wake up the IC. The IC supports two options to recover an overdischarged battery according to the ZVC pin voltage:

1. **Zero-Volt Charge Recovery**. In this configuration (connect ZVC to GND), even a battery at zero volts can be charged by applying a charger at PCKP. If a secondary protector is used, zero-volt charge recovery must be enabled.

There are three phases for 0V recovery charge as shown in Figure 8.

- **Phase 1.** $V_{BATT} \leq$ max(1.8V, V_{GS}). Low battery recovery charge phase. CHG is shorted to PCKP. PCKP voltage is clamped to $V_{GS_CHG} + V_{BATT}$.
- **Phase 2.** max(1.8V, V_{GS}) $\leq V_{BATT}$. Charge pump recovery charge phase. CHG is powered by the charge pump and CHG driver. This phase begins when V_{BATT} exceeds the FET's Vt threshold. The IC detects that the pump voltage is sufficient to drive the gate.
- **Phase 3.** V_{BATT} > 2.1V. The IC wakes up, begins ADC readings, and resumes normal protection functionality.

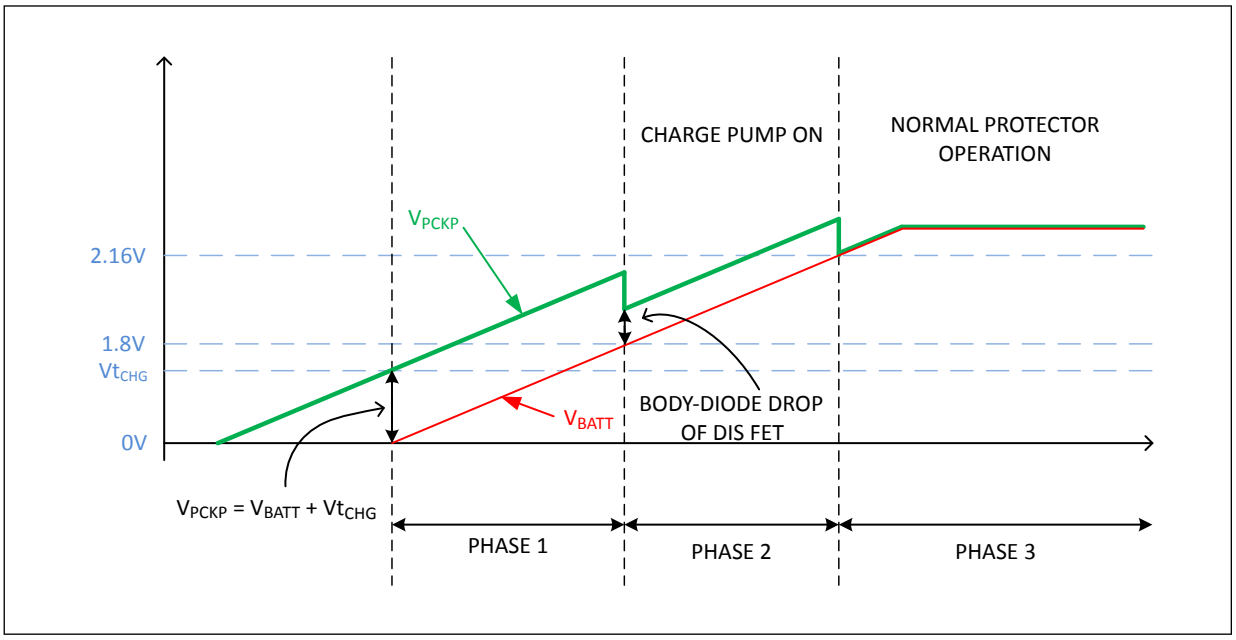

Figure 8. Zero-Volt Recovery Charge

2. **1.8V Charge Recovery**. In this configuration, a battery below 1.8V permanently rejects charge. This has some safety benefit for some Lithium batteries, since very low voltage can cause copper-deposition creating an unsafe state in the battery. If the cell is above 1.8V, then charge recovery begins in Phase 2 whenever a charger is applied at PCKP.

If the cell voltage is less than 1.8V, then the MAX1730x/MAX1731x connects PCKP to CHG as shown in Figure 9. V_{PCKP} becomes $V_{BATT} + VT_{CHG}$. This connection persists until the CP charge pump is enabled at approximately 1.8V. V_{PCKP} voltage varies based on the V_{GS} of the external CHG FET. At this time, PCKP disconnects from CHG and the device resumes normal protection operation.

Note: To ensure that a pack can be recovered from low voltage, the Vt of the CHG FET must be less than Charger's Voltage/2.

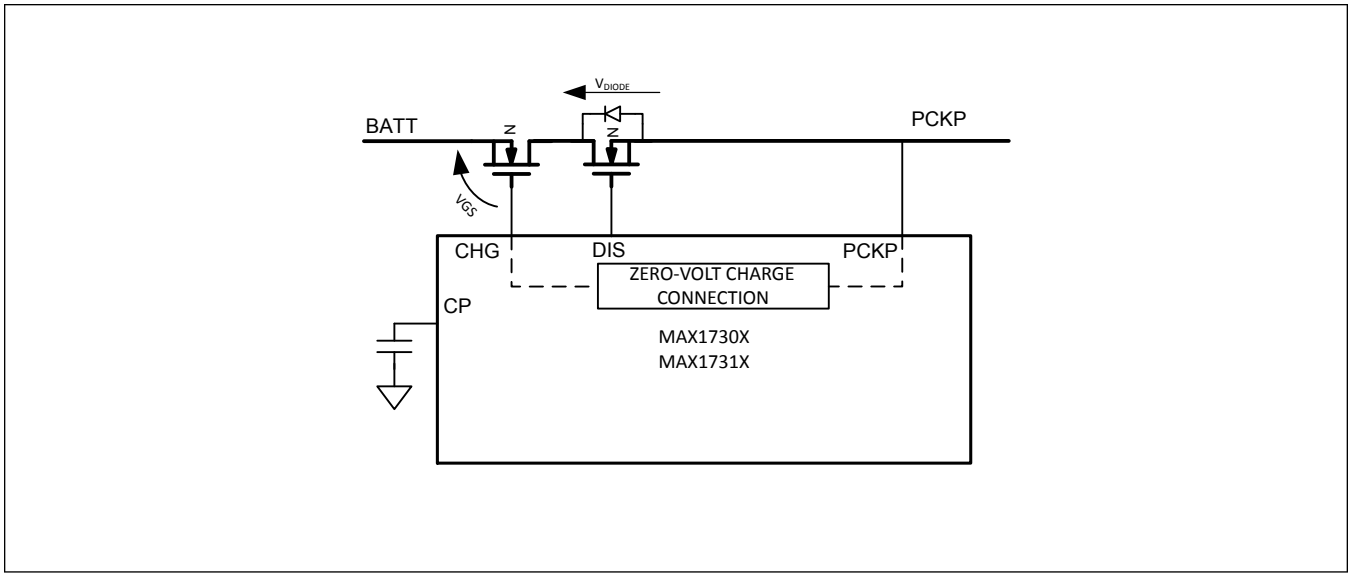

Figure 9. Zero-Volt Charging Diagram

Parallel Battery Management (MAX17300/MAX17310 Only)

The MAX17300/MAX17310 support automation to manage parallel charging or discharging of multiple batteries and prevent one battery from charging the other (cross-charging) with the following features and benefits:

- **Converge cell voltages faster with independent control**
  - Priority to charge the emptiest battery first
  - Priority to discharge the fullest battery first
  - Charge and discharge in parallel once cell voltages converge
- **Prevent cross-charge to optimize heat and dropout**
  - Break-Before-Make Control
    - Charger Insertion: Discharge blocking applies before charge enabling
    - Charger Removal: Charge blocking applies before discharge enabling

Set nPackCfg.ParEn = 1 to enable the Parallel Battery Management functionality. When enabled, a timeout automatically sequences charge/discharge blocking and enabling. The automatic charge blocking allows the host to determine which battery must be charged first and allows charging only the battery that is commanded to charge. Automatic discharge blocking prevents batteries at higher state from charging batteries at lower state. To block discharging while allowing charging, set *Config2*.BlockDisEn = 1. Status.AllowChgB is internally set every 351ms.

Host Responsibility for Parallel Battery Management

- **Declare the presence of charge source**. Only the host has this knowledge. Repeatedly write STATUS = 0xFFDF (AllowChgB = 0). The IC automatically blocks charging if AllowChgB is not cleared repeatedly within nDelayCfg.CHGWDT time (default 11.25s to 22.5s). After this timeout, all packs revert to allow-discharge and block-charge state.
- **Configure and manage to prevent cross-charging.** If cell voltages differ by more than 400mV, configure the higher voltage packs to block discharging. Note that the higher voltage pack resumes discharge after host stops declaring charger-presence. The nDelayCfg.CHGWDT should be set to 0 to minimize delay which can be up to 11.25s.
  - **Determine if emptiest cell can support system load** (3.3V, for example). If the lowest cell cannot support the system load, clear Config2.BlockDis = 0 until the empty battery is sufficiently charged to support the system. This prevents risk of system crash while higher-voltage packs are denied discharge support. Cross-charging should be allowed during the limited time associated with VCell < 3.3V.
  - **Block discharge** on packs identified as cross-charging risk. Set Config2.BlockDis = 1.

Table 6. Parallel Control Modes

NAME	nPackCfg.ParEn	Config2.BlockDis	Status.AllowChgB	CHG FET	DIS FET
No Parallel Management	0	x	x	NORMAL	NORMAL
Parallel Charging	1	0	0	NORMAL	NORMAL
Parallel Discharging	1	0	1 (+timeout)	BLOCK READY	NORMAL
Block Discharge	1	1	0	NORMAL	BLOCK READY
Parallel Discharging	1	1	1 (+timeout)	BLOCK READY	NORMAL

In the BLOCK READY state, the CHG or DIS FET is ready to block and is turned off if charging or discharging current is observed. In the NORMAL case, the CHG/DIS FET is controlled by standard protection.

ModelGauge m5 Algorithm

Classical coulomb-counter-based fuel gauges have excellent linearity and short-term performance. However, they suffer from drift due to the accumulation of the offset error in the current-sense measurement. Although the offset error is often very small, it cannot be eliminated, causes the reported capacity error to increase over time, and requires periodic corrections. Corrections are usually performed at full or empty. Some other systems also use the relaxed battery voltage to perform corrections. These systems determine the true state-of-charge (SOC) based on the battery voltage after a long time of no current flow. Both have the same limitation; if the correction condition is not observed over time in the actual application, the error in the system is boundless. The performance of classic coulomb counters is dominated by the accuracy of such corrections. Voltage measurement based SOC estimation has accuracy limitations due to imperfect cell modeling, but does not accumulate offset error over time.

The IC includes an advanced voltage fuel gauge (VFG), which estimates OCV, even during current flow, and simulates the nonlinear internal dynamics of a Li+ battery to determine the SOC with improved accuracy. The model considers the time effects of a battery caused by the chemical reactions and impedance in the battery to determine SOC. This SOC estimation does not accumulate offset error over time. The IC performs a smart empty compensation algorithm that automatically compensates for the effect of temperature condition and load condition to provide accurate state-of-charge information. The converge-to-empty function eliminates error toward empty state. The IC learns battery capacity over time automatically to improve long-term performance. The age information of the battery is available in the output registers.

The ModelGauge m5 algorithm combines a high-accuracy coulomb counter with a VFG. See Figure 10. The complementary combined result eliminates the weaknesses of both the coulomb counter and the VFG while providing the strengths of both. A mixing algorithm weighs and combines the VFG capacity with the coulomb counter and weighs each result so that both are used optimally to determine the battery state. In this way, the VFG capacity result is used to continuously make small adjustments to the battery state, canceling the coulomb-counter drift.

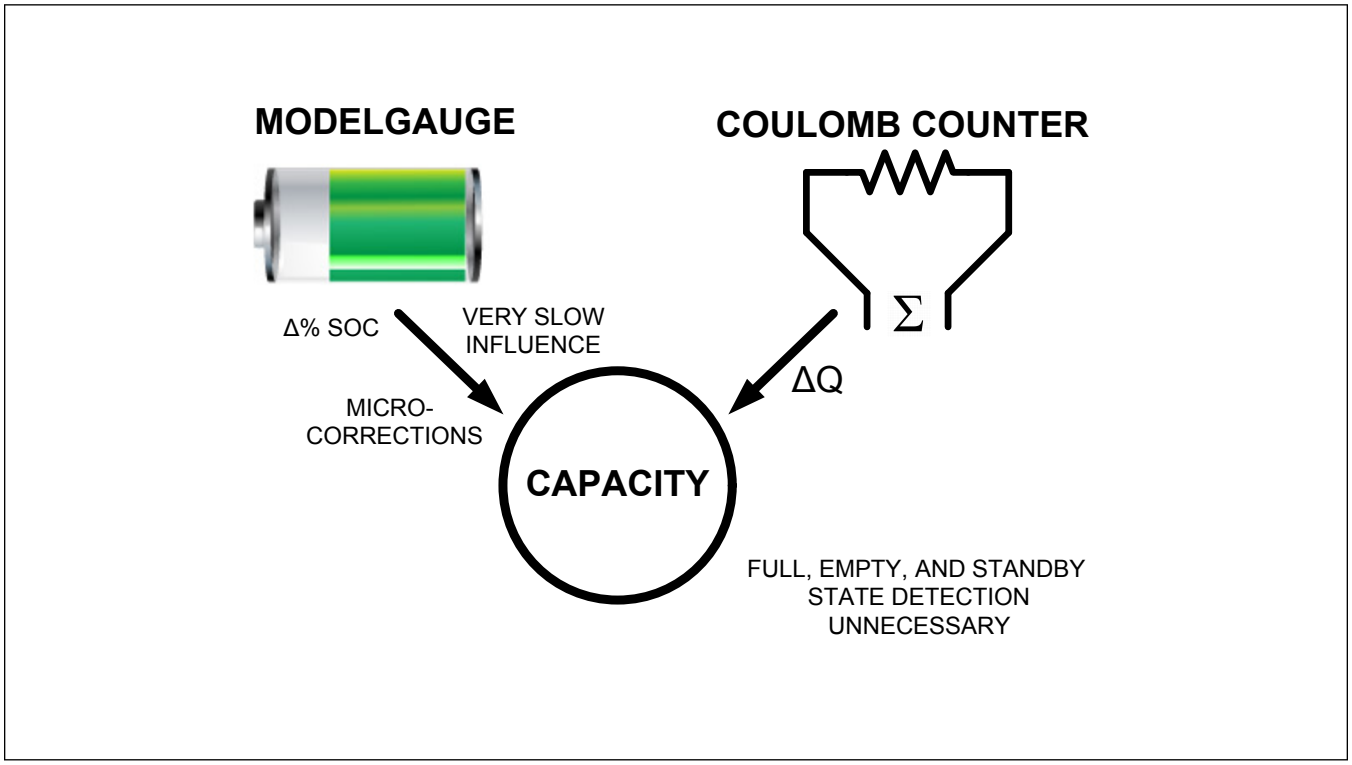

Figure 10. Merger of Coulomb Counter and Voltage Based Fuel Gauge

The ModelGauge m5 algorithm uses this battery state information and accounts for temperature, battery current, age, and application parameters to determine the remaining capacity available to the system. As the battery approaches the critical region near empty, the ModelGauge m5 algorithm invokes a special error correction mechanism that eliminates any error.

The ModelGauge m5 algorithm continually adapts to the cell and application through independent learning routines. As the cell ages, its change in capacity is monitored and updated and the voltage-fuel-gauge dynamics adapt based on cell-voltage behavior in the application.

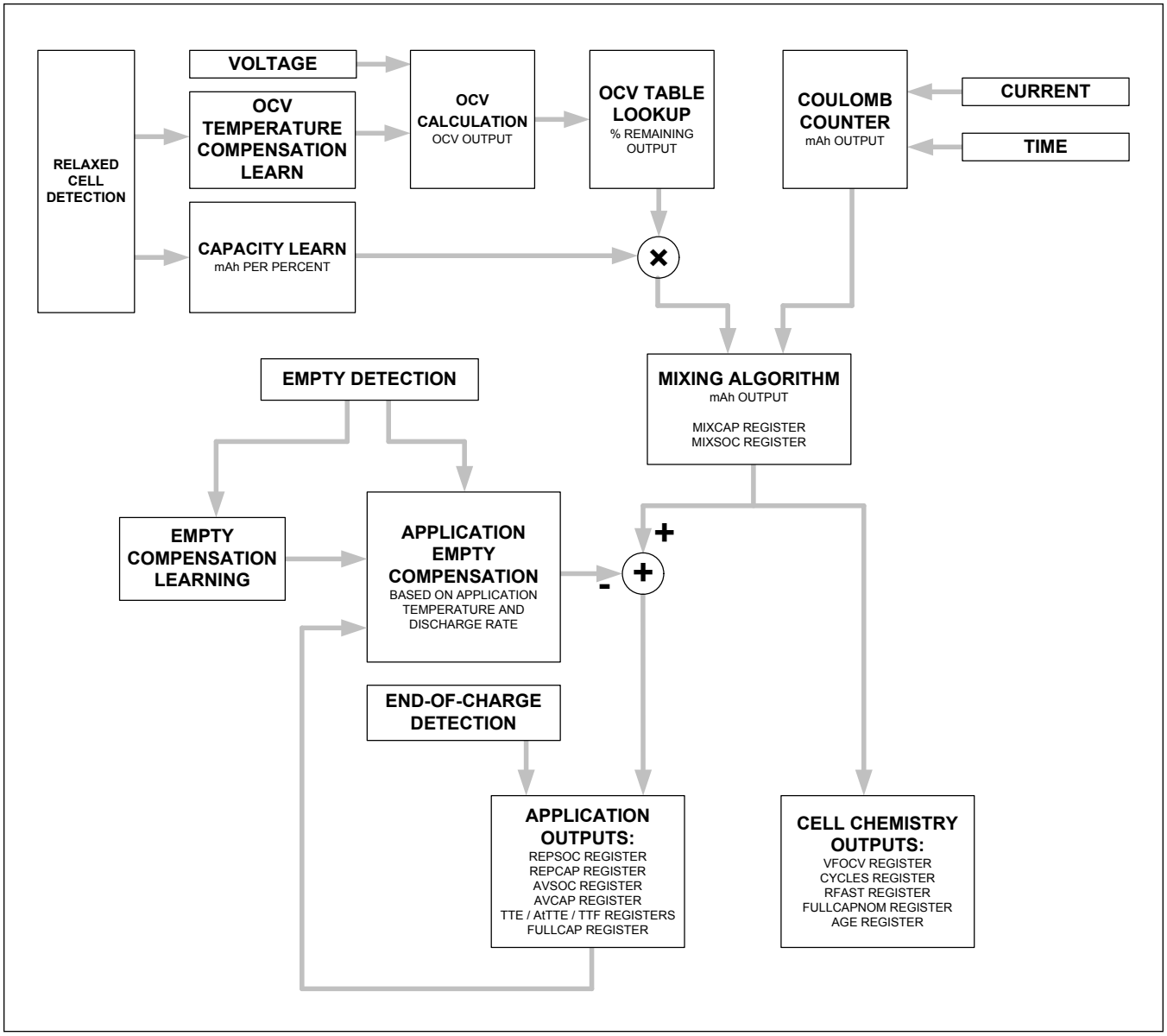

Figure 11. ModelGauge m5 Block Diagram

Wakeup/Shutdown

Modes of Operation

The MAX1730x/MAX1731x support six power modes (three active modes and three shutdown modes) with the typical current consumption of each mode for the different device types and configurations as shown in Table 7. Table 8 and Table 9 provide descriptions of the features available in each mode, and the method to enter and exit each mode.

Table 7. Typical Quiescent Current Values

MODE	SYMBOL	MAX17300/MAX17310 (µA)	MAX17301–MAX17303/ MAX17311–MAX17313 (µA)
Active	IQ_A	24	24
Hibernate	IQ_H	18	18
Protect	IQ_P	10	10
Ship	IQ_S	7	7
DeepShip	IQ_{DS}	0.5	0.5
DeepShip2	IQ_{DS2}	0.02	0.05 (UVShdn Only)

Table 8. Modes of Operation

MODE	SYMBOL	DESCRIPTION
Active	IQ_A	Full Functionality. Protection FETs, charge pump, and ADC are on. Firmware tasks execute every 351ms.
Hibernate (optional)	IQ_H	FETs, charge pump, and ADC are on. Firmware tasks execute every 1.4s. If enabled, the device automatically enters and exits this mode depending on current measurements. Entering hibernate mode requires a low-enough current for a long-enough duration. Exiting requires just one high-enough current event. For specific details regarding the thresholds, see nHibCfg register definition.
Protect	IQ_P	ADC is on. FETs and charge pump are disabled due to a protection event, disconnecting the battery from the system. RAM is preserved and the gauge continues to monitor the battery until the fault is removed. Firmware remains awake and ready to communicate. Firmware tasks execute every 1.4s.
Ship*	IQ_P	Similar state as "Protected and Awake" except the firmware is responsive to wakeup events such as: charger-connection, communications-wakeup, or pushbutton wakeup (depending on which wakeups are enabled by configuration). Firmware tasks execute every 1.4s.
	IQ_S	Similar state as "Protected and Awake" except the firmware is responsive to wakeup events such as: charger-connection, communications-wakeup, or pushbutton wakeup (depending on which wakeups are enabled by configuration). Firmware tasks execute every 5.625s.
DeepShip*	IQ_{DS}	FETs, charge pumps, ADC, and firmware are all placed into a shutdown state. The only activity alive relates to analog circuits that monitor for wakeup conditions (charger-detection, communications, or pushbutton, depending on which are enabled).
DeepShip2*	IQ_{DS2}	FETs, charge pumps, ADC, firmware, and most wakeup circuits are powered down. Only the charger-detection wakeup circuit remains powered in this mode to best conserve the small remaining battery capacity and prevent deep discharge.

*On I^2C shutdown command (setting Config.SHDN = 1) or when I^2C SCL/SDA lines collapse (and depending on whether COMMSH is enabled), the MAX1730x/MAX1731x either enter Ship (if nProtCfg.DeepShpEn = 0), DeepShip (if nProtCfg.DeepShpEn = 1) or enter DeepShip2 if nProtCfg.DeepShp2En = 1 (MAX17300/MAX17310 only).

Table 9. Low Power Modes Entry and Exit Conditions

MODE	ENTER	WAKEUP	FUNCTIONALITY	nProtCfg. DeepShipEn	nProtCfg. DeepShip2En
Ship (IQ_A)	Config.SHDN or SDA-collapse	I^2C, Pushbutton, or Charge Source	1.4s/5.6s Measurements/ Updates	0	0
DeepShip (IQ_{DS})			No Updates	1	0
DeepShip2 (IQ_{DS2})		Charge Source Only		1	1
DeepShip2 (IQ_{DS2})	VCell < UVShdn			X	X

The MAX1730x/MAX1731x can be awoken with a variety of methods depending on the configuration. If pushbutton wakeup is enabled (nConfig.PBen = 1), then consistently pulling the ALRT/PIO pin low, either by pushbutton or system configuration will wakeup the device. A high to low transition on any of the communication lines will wake up the device. A consistent connection to a charger will wake up the device.

The MAX1730x/MAX1731x prevents accidental wakeup when the system is boxed and shipped. When awoken by any source, it debounces all wakeup sources (button, communications, and charger-detection) to ensure that the wakeup is valid. If no valid wakeup is discovered, the device returns to Ship, DeepShip, or DeepShip2.

The I_Q in the active, hibernate, and ship modes are impacted by the configuration of the IC. Table 10 shows the recommended configuration settings for the nConfig register and the impact those settings have on the I_Q of each mode. Note that when in hibernate mode, the protection for overtemperature and overvoltage are delayed by the nHibCfg.HibScalar value. It is not recommended to have hibernation enabled with the nHibCfg.HibScalar set to more than 1.4 seconds.

Table 10. Recommended nHibCfg Settings and the Impact on I_Q

AVAILABLE LOW POWER CONFIGURATION	nHibCfg	FETS-OFF	FETS-ON MODES	UPDATE RATE		NOTES
		SHIP I_Q (µA)	ACTIVE/ HIBERNATE I_Q (µA)	ACTIVE (s)	SHIP (s)	
1.4s Ship	0x0909	IQ_P	IQ_A/NA	0.351	1.4	
1.4s Ship + Hibernate	0x8909	IQ_P	IQ_A/IQ_H	0.351	1.4	Overtemperature and overvoltage detection is delayed by 1.4s when in hibernate mode.
5.625s Ship	0x090B	IQ_S	IQ_A/NA	0.351	5.625	

Power Mode Transition State Diagram

Figure 12 illustrates how the device transitions in and out of all of the possible power modes of operation of the device. See Table 7 for the I_Q values for each mode and the different device types and configurations.

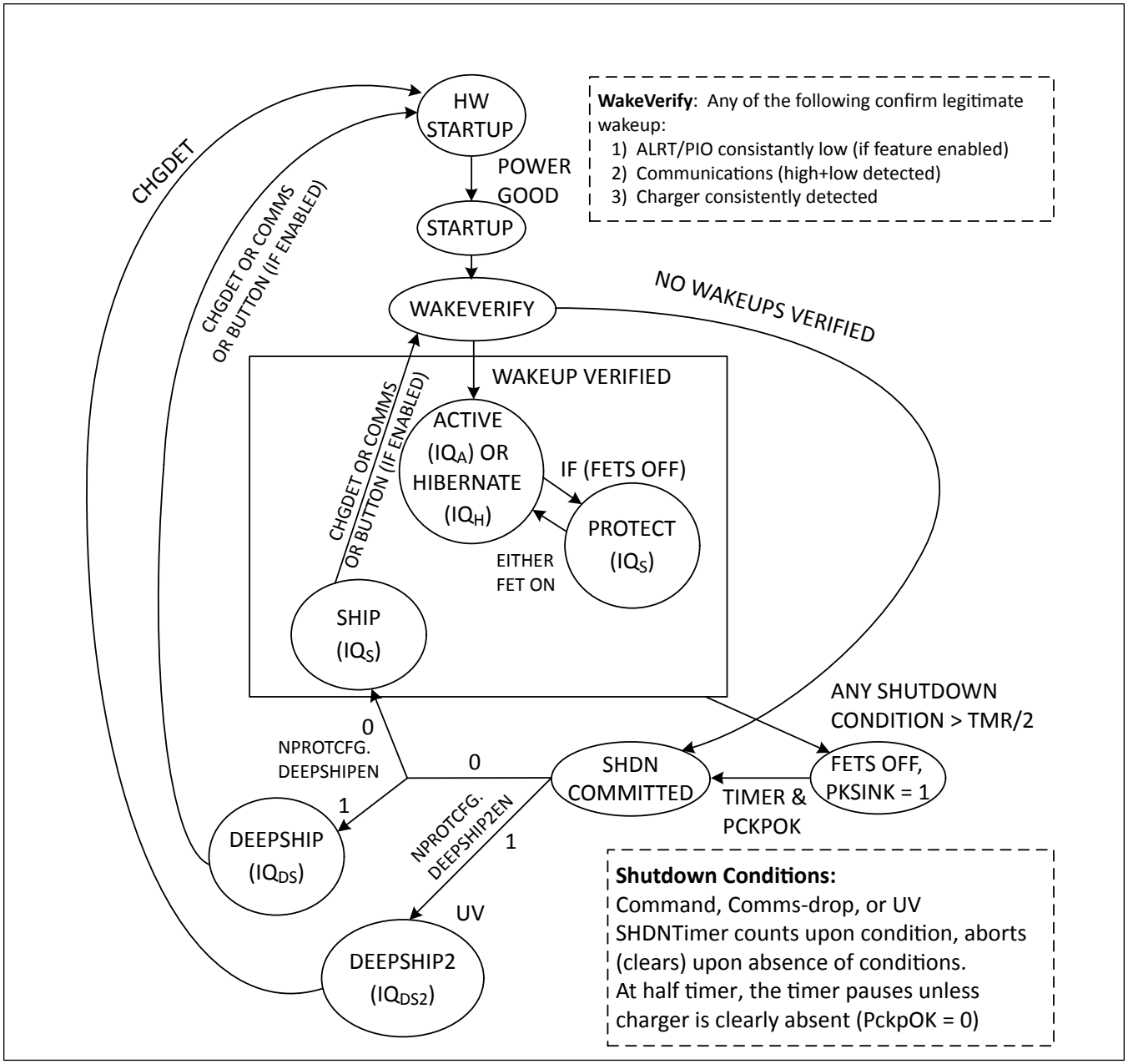

Figure 12. Power Mode Transition State Diagram

Pushbutton Wakeup

The ALRT/PIO pin can be used to wake up the device by enabling the pushbutton wakeup function by setting the nConfig.PBen. The pushbutton can be implemented in the system to wakeup the device and the system as shown in the *Pushbutton Schematic*.

Register Description Conventions

The following sections define standard conventions used throughout the data sheet to describe register functions and device behavior. Any register that does not match one of the following data formats is described as a special register.

Standard Register Formats

Unless otherwise stated during a given register's description, all IC registers follow the same format depending on the type of register. Refer to Table 11 for the resolution and range of any register described hereafter. Note that current and capacity values are displayed as a voltage and must be divided by the sense resistor to determine amps or amp-hours. It is strongly recommended to use the nRSense (1CFh) register to store the sense resistor value for use by host software.

Table 11. ModelGauge Register Standard Resolutions

REGISTER TYPE	LSB SIZE	MINIMUM VALUE	MAXIMUM VALUE	NOTES
Capacity	5.0µVh/ R_{SENSE}	0.0µVh	327.675mVh/ R_{SENSE}	Equivalent to 0.5mAh with a 0.010Ω sense resistor.
Percentage	1/256%	0.0%	255.9961%	1% LSb when reading only the upper byte.
Voltage	0.078125mV	0.0V	5.11992V	
Current	1.5625µV/ R_{SENSE}	-51.2mV/ R_{SENSE}	51.1984mV/ R_{SENSE}	Signed 2's complement format. Equivalent to 156.25µA with a 0.010Ω sense resistor.
Temperature	1/256°C	-128.0°C	127.996°C	Signed 2's complement format. 1°C LSb when reading only the upper byte.
Resistance	1/4096Ω	0.0Ω	15.99976Ω	
Time	5.625s	0.0s	102.3984hr	
Special				Format details are included with the register description.

Device Reset

Device reset refers to any condition that would cause the IC to recall nonvolatile memory into RAM locations and restart operation of the fuel gauge. Device reset refers to initial power up of the IC, temporary power loss, or reset through the software power-on-reset command.

Nonvolatile Backup and Initial Value

All configuration register locations have nonvolatile memory backup that can be enabled with control bits in the nNVCfg0, nNVCfg1, and nNVCfg2 registers. If enabled, these registers are initialized to their corresponding nonvolatile register value after device reset. If nonvolatile backup is disabled, the register restores to an alternate initial value instead. See each register description for details.

Register Naming Conventions

Register addresses are described throughout the document as 9-bit internal values from 000h to 1FFh. These addresses must be translated to 16-bit external values for the MAX17300-MAX17303 (I^2C) or 8-bit values for the MAX17310-MAX17313 (1-Wire). See the *Memory* section for details.

Register names that start with a lower case 'n', such as nPackCfg for example, indicate the register is a nonvolatile memory location. Register names that start with a lower case 's' indicate the register is part of the SBS compliant register block.

Protection Registers

Voltage Protection Registers

nVPrtTh1 Register (1D0h)

Register Type: Special

The nVPrtTh1 register shown in Table 12 sets undervoltage protection, deep-discharge-state protection, and undervoltage-shutdown thresholds. Prior to updating the nVPrtTh1 Register (Address 1D0h), the nVPrtTh1Bak Register (Address 0D6h) must first be written with the desired value.

Table 12. nVPrtTh1 Register (1D0h) Format

D15	D14	D13	D12	D11	D10	D9	D8	D7	D6	D5	D4	D3	D2	D1	D0
UVP						DisUVP	UOCVP					UVShdn			

UVP: Undervoltage Protection Threshold. The MAX1730x/MAX1731x opens the discharge FET when VCell < UVP. UVP can be configured from 2.2V to 3.46V in 20mV steps. UVP is unsigned.

DisUVP: Disable UVP. Set DisUVP = 1 to disable undervoltage protection threshold only. UOCVP and UVShdn still function normally. The DisUVP feature allows the application to continue to run down to the 2.16V minimum voltage of the IC. (MAX17300/MAX17310 only)

UOCVP: Under Open Circuit Voltage Protection Threshold (also referred to as SmartEmpty). The MAX1730x/MAX1731x opens the discharge FET when VFOCV < UOCVP. UOCVP is relative to UVP and can be configured from UVP to UVP + 1.28V in 40mV steps.

UVShdn: Undervoltage Shutdown Threshold. The MAX1730x/MAX1731x shutdowns when VCell < UVShdn. UVShdn is relative to UVP and can be configured from UVP - 0.32V to UVP + 0.28V in 40mV steps. Note that this is a signed value and UVShdn should be configured as a 2's compliment negative value so that UVShdn < UVP for MAX17301–MAX17303/MAX17311–MAX17313. This results in the IC protecting at the UVP threshold and continuing to operate and communicate until VCell < UVShd.

The MAX17300/MA17310 support two UVP/UVShdn cases:

- Case 1: Protect + Shutdown simultaneously. Set UVShdn > UVProtect. For example, UVShdn = 2.8V with UVProtect = 2.7V results in the MAX17300/MAX17310 simultaneously shutting down and protecting when VCell < 2.7V.
- Case 2: Continue operating/communicating after shutdown. Set UVShdn < UVProtect. For example, UVShdn = 2.6V with UVProtect = 2.7V results in the MAX17300/MAX17310 protecting at 2.7V and continuing to operate and communicate until VCell < 2.6V.

nVPrtTh2 Register (1D4h)

Register Type: Special

The nVPrtTh2 register shown in Table 13 sets permanent-failure-overvoltage-protection and prequalification voltage thresholds. Threshold limits are configurable with 20mV resolution over the full operating range of the VCell register.

Table 13. nVPrtTh2 Register (1D4h) Format

D15	D14	D13	D12	D11	D10	D9	D8	D7	D6	D5	D4	D3	D2	D1	D0
OVP_PermFail								Reserved							

OVP_PermFail: Permanent Failure OVP (overvoltage protection) threshold. Permanent Failure Overvoltage protection occurs when VCell register reading exceeds this value.

nJEITAV Register (1D9h)

nJEITAV Register, shown in Table 14, sets the JEITA charge voltage configuration for the MAX1730x/MAX1731x. The JEITA charge voltage can be read from a charger to set the appropriate charge voltage based on the temperature. Also, this value is used to determine the overvoltage-protection threshold.

Each charge voltage register is a signed offset with 5 or 20mV resolution. The RoomChargeV offset is defined relative

to a normal standard charge setting of 4.2V. The additional charge voltages are relative to RoomChargeV based on the temperature. To disable the temperature dependence and create a flat charging voltage across the temperature range, set dWarmChargeV, dColdChargeV, and dHotChargeV to a value of 0x00.

Table 14. nJEITAV Register (1D9h) Format

D15	D14	D13	D12	D11	D10	D9	D8	D7	D6	D5	D4	D3	D2	D1	D0
RoomChargeV								dWarmChargeV		dColdChargeV			dHotChargeV		

RoomChargeV: RoomChargeV defines the charge voltage between temperatures T2 and Twarm, relative to a standard 4.2V setting, providing a range of 3.56V to 4.835V in 5mV steps. RoomChargeV is a signed configuration. Set to 0x00 to configure for standard 4.2V.

dColdChargeV: ColdChargeV defines the delta charge voltage (relative to room) between temperatures T1 and T2, relative to the room setting, providing a range of RoomChargeV to RoomChargeV-140mV in -20mV steps. dColdChargeV configuration is unsigned.

dWarmChargeV: WarmChargeV defines the delta charge voltage (relative to room) between temperatures TWarm and T3, relative to the room setting, providing a range of RoomChargeV to RoomChargeV-60mV in -20mV steps. dWarmChargeV configuration is unsigned.

dHotChargeV: HotChargeV defines the delta charge voltage (relative to warm) between temperatures T3 and T4, relative to the warm setting, providing a range of WarmChargeV to WarmChargeV-140mV in -20mV steps. dHotChargeV configuration is unsigned.

nJEITACfg Register (1DAh)

The nJEITACfg register shown in Table 15 sets precharging current, the overvoltage protection threshold, and the overvoltage protection release threshold. dOVP and dOVP are relative to the Charge Voltage that is set in the nJEITAV register and have a 10mV resolution.

Table 15. nJEITACfg Register (1DAh) Format

D15	D14	D13	D12	D11	D10	D9	D8	D7	D6	D5	D4	D3	D2	D1	D0
PreChg								dOVP				dOVPR			

PreChg: Sets the precharging current for the ChargingCurrent register. Do not set PreChg = 0. Precharge current is calculated as:

PreChargeCurrent = nJEITAC.RoomChargingCurrent/(2 x PreChg)

dOVP: Sets JEITA overvoltage protection relative to ChargeVoltage (see nJEITAV). This is a positive number with 10mV resolution and 150mV range. Overvoltage protection is calculated as:

OVP = ChargeVoltage + dOVP x 10mV

dOVPR: Sets overvoltage-protection release relative to the overvoltage protection setting. This is a positive number with 10mV resolution and is translated to a negative offset relative to OVP. Overvoltage-protection release is calculated as:

OVPR = OVP - dOVPR x 10mV

Current Protection Registers

nODSCTh Register (1DDh)

Register Type: Special

Nonvolatile Restore: Enabled if nNVCfg1.enODSC is set.

The nODSCTh register sets the current thresholds for each overcurrent alert. The format of the registers is shown in Table 16.

Table 16. nODSCTh Register (1DDh) Format

D15	D14	D13	D12	D11	D10	D9	D8	D7	D6	D5	D4	D3	D2	D1	D0
X	OCTH					SCTH					ODTH				

X: Don't Care.

SCTH: Short-Circuit Threshold Setting. Sets the short-circuit threshold to a value between 0mV and -155mV with a step size of -5mV. The SCTH bits are stored such that 0x1F = 0mV and 0x00 = -155mV. Short-circuit threshold is calculated as -155mV + (SCTH x 5mV).

ODTH: Overdischarge Threshold Setting. Sets the overdischarge threshold to a value between 0mV and -77.5mV with a step size of -2.5mV. The ODTH bits are stored such that 0x1F = 0mV and 0x00 = -77.5mV. Overdischarge threshold is calculated as -77.5mV + (ODTH x 2.5mV).

OCTH: Overcharge Threshold Setting. Sets the overcharge threshold to a value between 0mV and 38.75mV with a step size of 1.25mV. The OCTH bits are stored such that 0x1F = 0mV and 0x00 = 38.75mV. Overcharge threshold is calculated as 38.75mV - (OCTH x 1.25mV).

Table 17 shows sample values of calculated mV thresholds for OCTH, SCTh, and ODTH. Equivalent current thresholds are shown assuming a 0.010Ω sense resistor.

Table 17. OCTH, SCTh, and ODTH Sample Values

	OCTH		SCTH		ODTH	
0x00	38.75mV	3.875A	-155mV	-15.50A	-77.5mV	-7.75A
0x01	37.50mV	3.750A	-150mV	-15.00A	-75.0mV	-7.50A
0x02	36.25mV	3.625A	-145mV	-14.50A	-72.5mV	-7.25A
0x04	33.75mV	3.375A	-135mV	-13.50A	-67.5mV	-6.75A
0x08	28.75mV	2.875A	-115mV	-11.50A	-57.5mV	-5.75A
0x10	18.75mV	1.875A	-75mV	-7.50A	-37.5mV	-3.75A
0x14	13.75mV	1.375A	-55mV	-5.50A	-27.5mV	-2.75A
0x18	8.75mV	0.875A	-35mV	-3.50A	-17.5mV	-1.75A
0x1E	1.25mV	0.125A	-5mV	-0.50A	-2.5mV	0.25A
0x1F	0.00mV	0.000A	0mV	0.00A	0.0mV	0.00A

nODSCCfg Register (1DEh)

Register Type: Special

Nonvolatile Restore: Operates if nNVCfg1.enODSC is set.

The nODSCCfg register configures the delay behavior for the short-circuit, over-discharge-current, and over-charge-current comparators. The format of the register is shown in Table 18.

Table 18. nODSCCfg Register (1DEh) Format

D15	D14	D13	D12	D11	D10	D9	D8	D7	D6	D5	D4	D3	D2	D1	D0
X	1	X	X	SCDLY				X	1	X	1	OCDLY			

X: Don't Care.

SCDLY: Short-Circuit Delay. Configure from 0x0 to 0xF to set short circuit detection debouncing delay between 70µs and 985µs (70µs + 61µs x SCDLY). There may be up to 31µs of additional delay before the short-circuit's alert effects the discharge FET.

OCDLY: Overdischarge and Overcharge Current Delay. Configure from 0x1 to 0xF to set overdischarge/overcharge detection debouncing delay between 70µs and 14.66ms (70µs + 977µs x OCDLY).

nIPrtTh1 Register (1D3h)—Overcurrent Protection Thresholds

Register Type: Special

The nIPrtTh1 register shown in Table 19 sets upper and lower limits overcurrent protection when current exceeds the configuration. The upper 8-bits set the overcharge current protection threshold and the lower 8-bits set the overdischarge current protection threshold. Protection threshold limits are configurable with 400µV resolution over the full operating range of the current register.

Table 19. nIPrtTh1 Register (1D3h) Format

D15	D14	D13	D12	D11	D10	D9	D8	D7	D6	D5	D4	D3	D2	D1	D0
OCCP								ODCP							

OCCP: Overcharge current-protection threshold in room temperature. Overcharge current-protection occurs when current register reading exceeds this value. This field is signed 2's complement with 400µV LSb resolution to match the upper byte of the current register. HotCOEF, WarmCOEF, and ColdCOEF rescales nIPrtTh1.OCCP in hot, warm, and cold regions.

For example, in warm regions, overcharge current protection threshold updates to OCCP x WarmCOEF.

See nJEITAC register for HotCOEF, WarmCOEF, and ColdCOEF definition and nTPrtTh2 and nTPrtTh3 registers for temperature region definition.

ODCP: Overdischarge current-protection threshold. Overdischarge current-protection occurs when current register reading exceeds this value. This field is signed 2's complement with 400µV LSb resolution to match the upper byte of the current register.

The fault delay for OCCP and ODCP is configured in nDelayCfg.OverCurrTimer.

nJEITAC Register (1D8h)

The nJEITAC register shown in Table 20 sets the nominal room temperature charging current and the coefficients to scale the charging current across the temperature zones shown in Figure 3. The WarmCOEF, ColdCOEF, and HotCOEF coefficients impact the charging current as well as OCCP and ODCP (See nIPrtTh1).

To disable the temperature dependence and create a flat charging current across the temperature range, set the lower byte of nJEITAC to a value of 0xFF.

Table 20. nJEITAC Register (1D8h) Format

D15	D14	D13	D12	D11	D10	D9	D8	D7	D6	D5	D4	D3	D2	D1	D0
RoomChargingCurrent								WarmCOEF		ColdCOEF			HotCOEF		

RoomChargingCurrent: Sets the nominal room-temperature charging current. The LSB is 200µV.

HotCOEF: Coefficient 12.5% to 100% relative to RoomChargingCurrent for controlling the charge current at hot. HotCOEF has a 12.5% LSB resolution. The resulting HotChargingCurrent is controlled by the following equation:

HotChargingCurrent = RoomChargingCurrent x (HotCOEF+1)/8

WarmCOEF: Coefficient 62.5% to 100% relative to RoomChargingCurrent for controlling the charge current at warm. WarmCOEF has a 12.5% LSB resolution. The resulting WarmChargingCurrent is controlled by the following equation:

WarmChargingCurrent = RoomChargingCurrent x (WarmCOEF+5)/8

ColdCOEF: Coefficient 12.5% to 100% relative to RoomChargingCurrent for controlling the charge current at cold. ColdCOEF has a 12.5% LSB resolution. The resulting ColdChargingCurrent is controlled by the following equation:

ColdChargingCurrent = RoomChargingCurrent x (ColdCOEF+1)/8

HotCOEF, WarmCOEF, and ColdCOEF also rescale nIPrtTh1.OCCP.

Temperature Protection Registers

nTPrtTh1 Register (1D1h)

Register Type: Special

The nTPrtTh1 register shown in Table 21 sets T1 "Too-Cold" and T4 "Too-Hot" thresholds which control JEITA and provide charging (Too-Hot or Too-Cold) protection. nProtMiscTh.TooHotDischarge provides discharging (Too-Hot only) protection. Threshold limits are signed and configurable with 1°C resolution over the full operating range Temp register.

Table 21. nTPrtTh1 Register (1D1h) Format

D15	D14	D13	D12	D11	D10	D9	D8	D7	D6	D5	D4	D3	D2	D1	D0

Table 21. nTPrtTh1 Register (1D1h) Format (continued)

T4 ("Too-Hot")	T1 ("Too-Cold")

T1-T4 follow JEITA's naming convention for temperature ranges.

T1: JEITA "Too-Cold" temperature threshold. When Temp < T1, charging is considered unsafe and unhealthy, and the MAX1730x/MAX1731x blocks charging.

T4: JEITA "Too-Hot" temperature threshold. When Temp > T4, charging is blocked by the MAX1730x/MAX1731x.

nTPrtTh2 Register (1D5h)

Register Type: Special

The nTPrtTh2 register shown in Table 22 sets T2 "Cold" and T3 "Hot" thresholds which control JEITA and modulate charging (Hot or Cold) guidance and protection. Threshold limits are signed and configurable with 1°C resolution over the full operating range Temp register.

Table 22. nTPrtTh2 (1D5h) Format

D15	D14	D13	D12	D11	D10	D9	D8	D7	D6	D5	D4	D3	D2	D1	D0
T3 ("Hot")								T2 ("Cold")							

T1-T4 follow JEITA's naming convention for temperature ranges.

T2: JEITA "Cold" temperature threshold. When Temp < T2, charging current/voltage should be reduced, and the charge-protection thresholds are adjusted accordingly.

T3: JEITA "Hot" temperature threshold. When Temp > T3, charging current/voltage should be reduced and the charge-protection thresholds are adjusted accordingly.

nTPrtTh3 Register (1D2h) (beyond JEITA)

Register Type: Special

The nTPrtTh3 register shown in Table 23 sets Twarm and TpermFailHot thresholds which control JEITA and modulate charging (Warm) guidance and protection. Threshold limits are signed and configurable with 1°C resolution over the full operating range Temp register.

Table 23. nTPrtTh3 Register (1D2h) Format

D15	D14	D13	D12	D11	D10	D9	D8	D7	D6	D5	D4	D3	D2	D1	D0
TpermFailHot								Twarm							

nTPrtTh3 defines protection thresholds beyond standard JEITA definition.

Twarm: Warm temperature threshold (between 'normal' and THot), giving an extra temperature region for changing charging current and charging voltage control.

TpermFailHot: The IC goes into permanent failure mode (if enabled on the MAX17300-301/MAX17310-311 only), and permanently disables the charge FET as well as trips the secondary protector (if installed) or blows the fuse (if installed).

Fault Timer Registers

nDelayCfg Register (1DCh)

Set nDelayCfg to configure debounce timers for various protection faults. A fault state is concluded only if the condition persists throughout the duration of the timer.

Table 24. nDelayCfg (1DCh) Format

D15	D14	D13	D12	D11	D10	D9	D8	D7	D6	D5	D4	D3	D2	D1	D0
CHGWDT		FullTimer			OVPTimer		OverCurrTimer			PermFailTimer		TempTimer		UVPTimer	

UVPTimer: Set UVPTimer to configure the Undervoltage-Protection timer.

Shutdown Timer: Set UVPTimer to configure the Shutdown timer. (DevName >= 0x4070 only)

Table 25. UVPTimer Settings

UVPTIMER SETTING	0	1	2	3
UVPTimer Configuration	0 to 351ms	351ms to 0.7s	0.7s to 1.4s	1.4s to 2.8s
Shutdown Timer Configuration	22.5s to 45s	45s to 90s	90s to 180s	3min to 6min

TempTimer: Set TempTimer to configure the fault-timing for the following faults: Too-Cold-Charging (TooColdC), Too-Hot-Charging (TooHotC), Die-Hot (DieHot), and Too-Hot-Discharging (TooHotD).

Table 26. TempTimer Setting

TEMPTIMER SETTING	0	1	2	3
Configuration	0 to 351ms	351ms to 0.7s	0.7s to 1.4s	1.4s to 2.8s

The TempTimer setting also controls the temperature transition delay which means if the MAX1730x/MAX1731x detects a change in temperature region that results in the OVP level being reduced to a lower level due to the JEITA configuration, there is a delay equal to the TempTrans configuration before the new lower OVP threshold goes into effect.

Table 27. TempTrans Configuration Settings

TEMPTIMER SETTING	0	1	2	3
TempTrans Configuration	3.151s to 4.55s	5.951s to 8.75s	11.55s to 17.15s	23.351s to 34.851

PermFailTimer: Set PermFailTimer to configure the fault timing for permanent failure detection. Generally, larger configurations are preferred to prevent permanent failure unless some severe condition persists.

Table 28. PermFailTimer Settings

PERMFAILTIMER SETTING	0 (NOT RECOMMENDED)	1	2	3
Configuration	0 to 351ms	351ms to 0.7s	0.7s to 1.4s	1.4s to 2.8s

OverCurrTimer: Set OverCurrTimer to configure the slower overcurrent protection (the additional fast hardware protection thresholds are described in nODSCCfg and nODSCTh). OverCurrTimer configures the fault timing for the slow overcharge-current detection (OCCP) as well as overdischarge current detection (ODCP).

Table 29. OverCurrTimer Settings

OVERCURRTIMER SETTING	0	1	2	3	4	5	6	7
Configuration	0-351ms	0.351s to 0.7s	0.7s to 1.4s	1.4sto 2.8s	2.8s to 5.6s	5.6s to 11.25s	11.25s to 22.5s	22.5s to 45s

OVPTimer: Set OVPTimer to configure the fault timing for overvoltage protection.

Table 30. OVPTimer Settings

OVPTIMER SETTING	0	1	2	3
Configuration	0 to 351ms	351ms to 0.7s	0.7s to 1.4s	1.4s to 2.8s

FullTimer: Set FullTimer to configure the timing for full detection. When charge-termination conditions are detected, and after the timeout, the CHG FET turns off (if the feature is enabled).

Table 31. FullTimer Settings

FULLTIMER SETTING	0	1	2	3	4	5	6	7
Configuration	22s to 33s	45s to 67s	1.5min to 2.25min	3min to 4.5min	6min to 9min	12min to 18min	24min to 36min	72min to 1.6hr

CHGWDT: Set CHGWDT to configure the charger communication watchdog timer. If enabled, the MAX173xx charge-protects whenever the host has stopped communicating longer than this timeout.

Table 32. ChgWDT Settings

CHGWDT SETTING	0	1	2	3
Configuration	11.2s to 22.5s	22.5s to 45s	45s to 90s	90s to 3min

Battery Internal Self-Discharge Detection Registers (MAX17300/MAX1310 Only)

Factory Default nCheckSum Value: 10F0h

To enable the ISD feature using the coulombic-efficiency (CE) method, configure LeakFaultCfg, LeakCurrTh, and CEEn as shown in Table 33. Choose the alert and fault mode with LeakFaultCfg and configure the thresholds with LeakCurrTh, as shown in Table 34. When the ISD alerts are enabled, any leakage current detected beyond the threshold is indicated by the *ProtAlrt*.LDET bit and Status.PA bit (if *nConfig*.ProtAlrtEn = 1). If the ALRT pin is enabled for alerts (*nConfig*.Aen = 1 and *nConfig*.ProtAlrtEn = 1), then the pin indicates the ISD alert. To service the alert, first clear the *ProtAlrt* register and then clear Status.PA. The event is also indicated in *nBattStatus*.LDET, which is recorded in the permanent lifelog.

The reported leakage-current measurement can be read from two different different registers:

- LeakCurrRep = 15-bit unsigned left-justified value with an LSB of 1.5625µV/16 (or 0.15625mA/16 with 10mΩ sense resistor)
- *nBattStatus*.LeakCurr = 8-bit unsigned value with an LSB of 3.125µV (or 0.3125mA with 10mΩ sense resistor)

Contact Analog Devices for configuring the ISD feature.

Table 33. nCheckSum Register (1DFh) Format

D15	D14	D13	D12	D11	D10	D9	D8	D7	D6	D5	D4	D3	D2	D1	D0
LeakFaultCfg			CEEn	LeakCurrTh				CheckSum							

Table 34. Alert and Fault Mode Settings

LEAKFAULTCFG SETTING	DESCRIPTION	LEAKCURRTH RESOLUTION	ALERT RANGE	FAULT RANGE
		Note: Leakage current above LeakCurrTh triggers an alert/fault. Currents refer to the 10mΩ R_{SENSE}.		
000	Disabled			
001	Alert Only	0.3125mA	0.3125mA to 5mA	
010	Fault = Alert + 2.5mA			2.8125mA to 7.5mA
011	Fault = Alert + 5mA			5.3125mA to 10mA
100	Fault Only (+2.5mA offset)	0.625mA		3.125mA to 12.5mA
101	Alert Only		0.625mA to 10mA	
110	Fault = Alert + 2.5mA			3.125mA to 12.5mA
111	Fault = Alert + 10mA			10.625mA to 20mA

X: Don't Care

CEEn: Coulombic-Efficiency (CE) Method Enable. Set to 1 to enable self-discharge detection.

LeakFaultCfg: Leakage Fault Configuration. Set LeakFaultCfg to configure the alert and fault behavior as shown in Table 34.

LeakCurrTh: Leakage Current Threshold is an unsigned 4-bit threshold for leakage current alert and fault generation. The LSB resolution is either 0.3125mA or 0.625mA based on the LeakFaultCfg setting as shown in Table 34. When alerts and faults are both enabled, the fault threshold is either 2.5mA, 5mA, or 10mA above the alert threshold as shown in the Description column of Table 34.

CheckSum: Protector NVM CheckSum. CheckSum is the checksum value of the protection registers for validating NVM at startup when *nNVCfg1*.enProtChksm = 1.

LeakCurrRep Register (0x16F)

The LeakCurrRep register contains the reported leakage current when it is enabled with nCheckSum.CEEn as shown in Table 35.

Table 35. LeakCurrRep Register (0x16F) Format

D15	D14	D13	D12	D11	D10	D9	D8	D7	D6	D5	D4	D3	D2	D1	D0
0	Reported LeakCurrent														

Reported LeakCurrent: Reported Leak Current is an unsigned 15-bit leakage current. This register stores the reported leakage current with an LSB of 1.5625µV/16 (or 0.15625mA/16 with a 10mΩ sense resistor). The range is 0mA to 319.99mA.

Status/Configuration Protection Registers

nProtCfg Register (1D7h)

The Protection Configuration register contains enable bits for various protection functions.

Table 36. nProtCfg Register (1D7h) Format

D15	D14	D13	D12	D11	D10	D9	D8
ChgWDTEn	0	0	SCTest		CmOvrdEn	1	Reserved
D7	**D6**	**D5**	**D4**	**D3**	**D2**	**D1**	**D0**
Reserved	PFEn	DeepShpEn	OvrdEn	$\overline{\text{UVRdy}}$	FetPFEn	BlockDisCEn	DeepShp2En

PFEn: PermFail Enable (MAX17300-301/MAX17310-311). Set PFEn = 1 to enable the detection of a permanent failure to permanently turn the FETs off. All types of permanent failures operate only if PFEn = 1 and are all disabled if PFEn = 0.

FetPFEn: FET PermFail Enable (MAX17300-301/MAX17310-311). Set to 1 to enable Charge FET failure detection and Discharge FET failure detection, which registers a permanent failure and permanently turns the FETs off.

$\overline{\text{UVRdy}}$: Undervoltage Ready. In the undervoltage protected state (but higher than undervoltage shutdown), this bit chooses whether or not the CHG FET remains enabled. Configure $\overline{\text{UVRdy}}$ = 0 to keep the CHG FET and corresponding pumps powered during undervoltage protection. In this state, the pack is quickly responsive to charger connection, but the quiescent consumption remains at the full-active rate (see Table 8). Configure $\overline{\text{UVRdy}}$ = 1 to disable the CHG FET and corresponding charge pumps during undervoltage protection. In this state, the consumption drops to the protected and awake rate, but there is a hibernate latency (set by nHibCfg.HibScalar) between when the charger is applied and when the battery begins charging.

OvrdEn: Override Enable. Set OvrdEn = 1 to enable the Alert pin to be an input to disable the protection FETs.

DeepShpEn: Set DeepShpEn = 1 and DeepShp2En = 0 to associate shutdown actions (I^2C shutdown command or communication removal) with deep ship mode (IQ_{DS}). All registers power down in this mode. Set DeepShpEn = 0 to continue full calculations but with protector disabled (CHGEn = 0, DISEn = 0, pump off), operating at the Ship mode consumption rate (IQ_S).

DeepShp2En: Set DeepShp2En = 1 to associate shutdown actions (I^2C shutdown command or communication removal) with DeepShip2 mode (IQ_{DS2}). (MAX17300/MAX17310 only)

CmOvrdEn: Comm Override Enable. This bit when set to 1 allows the CHGOff and DISOff bits in CommStat to be set by I^2C/1-Wire communication to turn off the protection FETs.

SCTest: Set SCTest = 01 to source 30µA from BATT to PCKP for testing the presence/removal of any overload/short-circuit at PCKP. SCTest is only used during special circumstances when DIS = off. Particularly if an overdischarge current fault has been tripped. Firmware sets SCTest to push 30µA into PCKP. If PCKP rises above the SCDet (Short-Circuit Detection) threshold (1V), then the overload is considered "removed" and safe to reconnect the DIS FET.

ChgWDEn: Charger WatchDog Enable. If the charger watchdog feature is enabled, the protector disallows charging if communication has not been detected for more than the Charger WatchDog delay that is configured in nDelayCfg.ChgWdg.

BlockDisCEn: Block Discharge at TooCold Enable. If the block discharge at cold is enabled, the protector also disallows discharging when the temperature is below the TooCold Threshold (nTPrtTh1). (MAX17300/MAX17310 only)

nBattStatus Register (1A8h)

Battery Status Nonvolatile Register

The Battery Status register contains the permanent battery status information. If nProtCfg.PFen = 1, then a permanent fail results in permanently turning the FETs off to ensure the safety of the battery.

Table 37. nBattStatus Register (1A8h) Format

D15	D14	D13	D12	D11	D10	D9	D8
PermFail	OVPF	OTPF	CFETFs	DFETFs	FETFo	LDet	ChksumF
D7	**D6**	**D5**	**D4**	**D3**	**D2**	**D1**	**D0**
LeakCurr							

PermFail: Permanent Failure. This bit is set if any permanent failure is detected.

CFETFs: ChargeFET Failure-Short Detected. If the MAX1730x/MAX1731x detects that the charge FET is shorted and cannot be opened, it sets the CFETFs bit and the PermFail bit. This function is enabled with nProtCfg.FetPFEn.

DFETFs: DischargeFET Failure-Short Detected. If the MAX1730x/MAX1731x detects that the discharge FET is shorted and cannot be opened, it sets the DFETFs and the PermFail bit. This function is enabled with nProtCfg.FetPFEn.

FETFo: FET Failure Open. If the MAX1730x/MAX1731x detects an open FET failure, it sets FETFo. In this case, it is not possible to distinguish which FET is broken. This function is enabled with nProtCfg.FetPFEn.

LDet: Leakage Detection Fault. This bit is set when a leakage detection fault has been detected.

ChksumF: Checksum Failure. ChksumF protection related NVM configuration registers checksum failure. In the case of a checksum failure, the device sets the PermFail bit but does not write it to NVM in order to prevent using an additional NVM write. This allows the PermFail bit to be cleared by the host so that the INI file can be reloaded.

LeakCurr: Leakage Current. Leakage current is an unsigned 8-bit result of leakage current from self-discharge in a cell. This field saves the leakage current from the LeakCurrRep register. The LSB for this field is 3.125µV (or 0.625mA with a 5mΩ R_{SENSE} with a range of 0mA to 159.375mA).

ProtStatus Register (0D9h)

The Protection Status register contains the Fault States of the Protection State Machine.

Table 38. ProtStatus Register (0D9h) Format

D15	D14	D13	D12	D11	D10	D9	D8
ChgWDT/BlockChg	TooHotC	Full	TooColdC	OVP	OCCP	Qovflw	0
D7	**D6**	**D5**	**D4**	**D3**	**D2**	**D1**	**D0**
Reserved	PermFail	DieHot	TooHotD	UVP	ODCP	TooColdD	Shdn

Shdn: A flag to indicate the Shutdown Event status to Protector module for further action on Charging/Discharging FETs, Charge Pump and PkSink.

PermFail: Permanent Failure Detected. See nBatteryStatus for details of the Permanent Failure.

Discharging Faults:

ODCP—Overdischarge current protection

UVP—Undervoltage Protection

VPreQual—PreQual Voltage

TooHotD—Overtemperature for Discharging

TooColdD—Undertemperature for Discharging (If enabled with nProtCfg.BlockDisCEn = 1) (MAX17300/MAX17310 only)

DieHot—Overtemperature for die temperature

Charging Faults:

TooHotC—Overtemperature for Charging

OVP—Overvoltage

OCCP—Overcharge Current Protection

Qovrflw—Q Overflow

TooColdC—Undertemperature

Full—Full Detection

ChgWDT—Charge Watch Dog Timer

BlockChg—Block Charge by Parallel Charging Management (MAX17300/MAX17310 only)

DieHot—Overtemperature for Die Temperature

ProtAlrt Register (0AFh)

The Protection Alerts register (MAX17300/MAX17310 only) contains a history of any protection events that have been logged by the device and is formatted as shown in Table 39. If any bit of ProtAlrt is 1, then the Status.PA bit is also 1 if Config.ProtAlrtEn = 1. Once a bit is set, it remains set until cleared by the host. The Alert pin is driven low if Config.AEn = 1 and Config.ProtAlrtEn = 1. The bits in ProtAlrt mirror the bits in ProtStatus with the exception of the RegionChange and LDET bits.

Table 39. ProtAlrt Register (0AFh) Format

D15	D14	D13	D12	D11	D10	D9	D8
ChgWDT	TooHotC	Full	TooColdC	OVP	OCCP	Qovflw	Reserved
D7	**D6**	**D5**	**D4**	**D3**	**D2**	**D1**	**D0**
Reserved	RegionChange	DieHot	TooHotD	UVP	ODCP	TooColdD	LDet

HConfig2 Register (0F5h)

Register Type: Special

Nonvolatile Backup: None

The status of the discharge FET and charge FET can be monitored in the HConfig2 register as shown in Table 40.

Table 40. HConfig2 (0F5h) Format

D15	D14	D13	D12	D11	D10	D9	D8	D7	D6	D5	D4	D3	D2	D1	D0
x	x	x	x	x	x	x	x	DISs	CHGs	x	x	x	x	x	x

DISs: Discharge FET Status. DISs = 1 indicates the discharge FET is on and allows discharge current. DISs = 0 indicates the discharge FET is off and blocks discharge current.

CHGs: Charge FET Status. CHGs = 1 indicates the charge FET is on and allows charge current. CHGs = 0 indicates the charge FET is off and blocks charge current.

X: Reserved.

nFaultLog Register (1AEh)

This register has dual functionality depending on configuration settings. If nNVCfg2.enFL = 1, the nFaultLog register contains a history of protection events that have been logged at any moment by the device during the log interval and is formatted as shown in Table 41.

Alternatively, if nNVCfg0.enAF = 1, the register becomes repurposed for Age Forecasting data. If neither option is enabled, this register can be used as general-purpose user memory.

This register is periodically saved to nonvolatile memory as part of the life-logging function.

Table 41. nFaultLog Register (1AEh) Format

D15	D14	D13	D12	D11	D10	D9	D8
Reserved	Reserved	Reserved	Reserved	Reserved	Reserved	Reserved	Reserved
D7	**D6**	**D5**	**D4**	**D3**	**D2**	**D1**	**D0**
TooHotC	TooColdC	OVP	OCCP	DieHot	Imbalance	UVP	ODCP

Other Protection Registers

nProtMiscTh Register (1D6h)

Register Type: Special

The nProtMiscTh register is shown in Table 42 and sets a few miscellaneous protection thresholds.

Table 42. nProtMiscTh Register (1D6h) Format

D15	D14	D13	D12	D11	D10	D9	D8	D7	D6	D5	D4	D3	D2	D1	D0
QovflwTh				TooHotDischarge				CurrDet				DieTempTh			

DieTempTh: Sets the dietemp overtemperature protection threshold relative to 50°C and has an LSB of 5°C. DieTempTh defines the delta between 50°C and the dietemp protection threshold. The range is 50°C and 125°C.

CurrDet: CurrDet is configurable from 25µV/R_{SENSE} to 400µV/R_{SENSE} in 25µV/R_{SENSE} steps (equivalent to 2.5mA to 40mA in 2.5mA steps with a 0.010Ω sense resistor). It is a threshold to detect discharging and charging event from the device perspective. If (current > CurrDet) charging; if (current < -CurrDet) discharging.

TooHotDischarge: Sets the over-temperature protection threshold associated with discharge. TooHotDischarge has 2°C LSB's and defines the delta between Over-Temp-Charge (nTPrtTh1.T4) and Over-Temp-Discharge. The range is nTPrtTh1.T4(TooHot) to nTPrtTh1.T4(TooHot) + 30°C.

QovflwTh: QovflwTh sets the coefficient for the Qoverflow protection threshold. Qoverflow protection threshold = designCap x coefficient. The MAX1730x/MAX1731x monitors the delta Q between the Q at the start of charge and the current Q. If the delta Q exceeds the Qoverflow protection threshold, indicating that the charger has charged more than the expected capacity of the battery, then a ProtStatus.Qovrflw fault is generated. The coefficient is calculated as: coefficient = 1.0625 + (QovflwTh x 0.0625).

Charging Prescription Registers

ChargingCurrent Register (028h)

Register Type: Current

Nonvolatile Backup: None

The ChargingCurrent register reports the prescribed charging current.

ChargingVoltage Register (02Ah)

Register Type: Voltage

Nonvolatile Backup: None

The ChargingVoltage register reports the prescribed charging voltage.

nStepChg Register (1DBh)

The nStepChg register defines the step-charging prescription as shown in Figure 7.

Note: This only effects the ChargingCurrent output register which prescribes a charge current from the external charger. To disable step-charging, set nStepChg = 0xFF00.

Table 43. nStepChg Register (1DBh) Format

D15	D14	D13	D12	D11	D10	D9	D8	D7	D6	D5	D4	D3	D2	D1	D0

Table 43. nStepChg Register (1DBh) Format (continued)

StepCurr1	StepCurr2	StepdV0	StepdV1

StepCurr1 and **StepCurr2:** Both of these register bit-fields scale the JEITA charge current down by a 4-bit ratio from 1/16 to 16/16.

StepdV0 and **StepdV1:** These register bit-fields configure StepVolt0 and StepVolt1 relative to the JEITA charge voltage. Both registers are negative offsets relative to JEITA ChargeVoltage, and both registers support 10mV LSB.

ModelGauge m5 Algorithm

ModelGauge m5 Registers

For accurate results, ModelGauge m5 uses information about the cell and the application as well as the real-time information measured by the IC. Figure 13 shows inputs and outputs to the algorithm grouped by category. Analog input registers are the real-time measurements of voltage, temperature, and current performed by the IC. Application-specific registers are programmed by the customer to reflect the operation of the application. The Cell Characterization Information registers hold characterization data that models the behavior of the cell over the operating range of the application. The Algorithm Configuration registers allow the host to adjust performance of the IC for its application. The Learned Information registers allow an application to maintain accuracy of the fuel gauge as the cell ages. The register description sections describe each register function in detail.

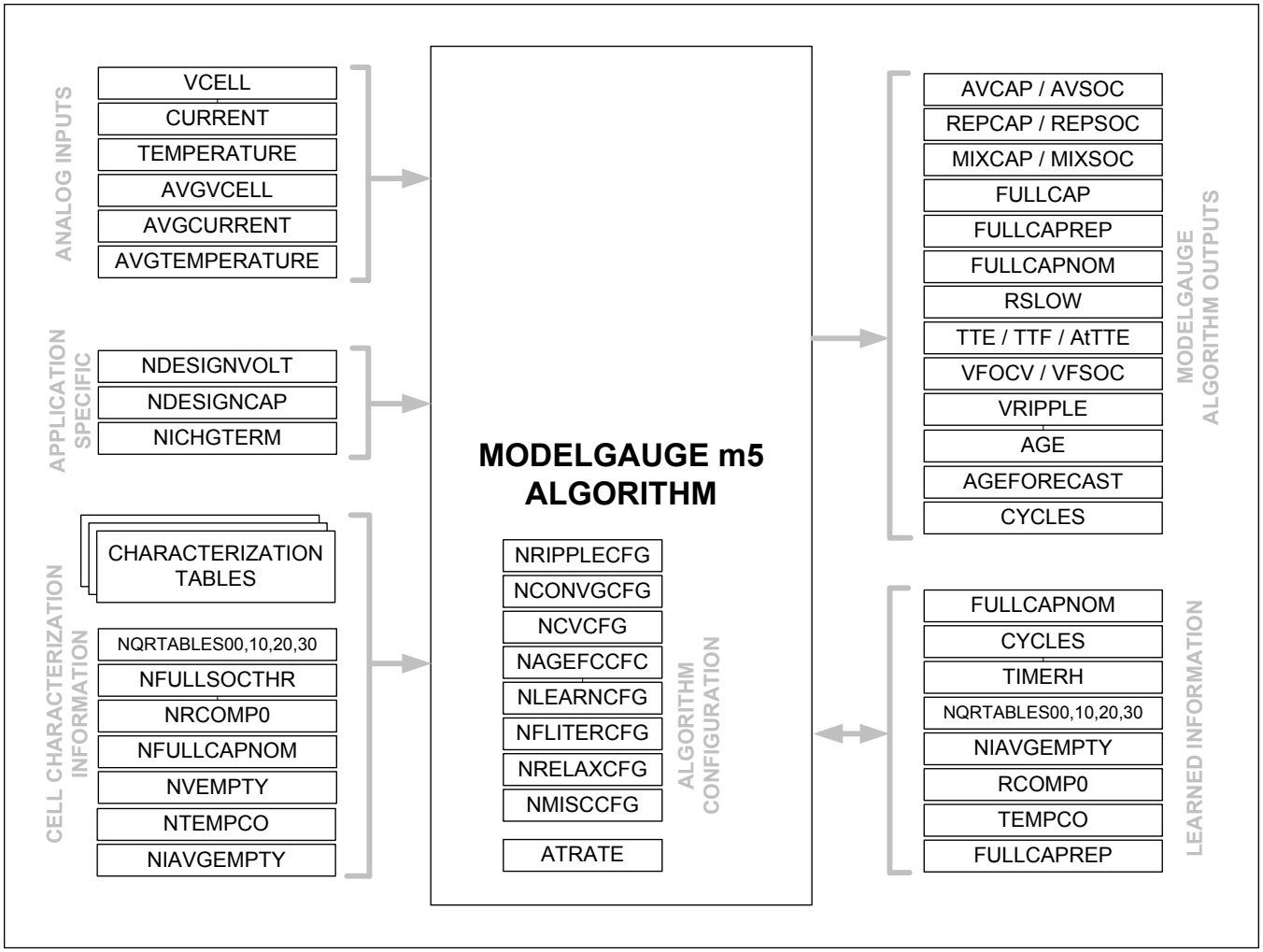

Figure 13. ModelGauge m5 Registers

ModelGauge m5 Algorithm Output Registers

The following registers are outputs from the ModelGauge m5 algorithm. The values in these registers become valid 480ms after the IC is reset.

RepCap Register (005h)

Register Type: Capacity

Nonvolatile Backup: None

RepCap or Reported Capacity is a filtered version of the AvCap register that prevents large jumps in the reported value caused by changes in the application such as abrupt changes in temperature or load current. See the *Fuel-Gauge Empty Compensation* section for details.

RepSOC Register (006h)

Register Type: Percentage

Nonvolatile Backup: None

RepSOC is a filtered version of the AvSOC register that prevents large jumps in the reported value caused by changes in the application such as abrupt changes in load current. RepSOC corresponds to RepCap and FullCapRep. RepSOC

is intended to be the final state of charge percentage output for use by the application. See the *Fuel-Gauge Empty Compensation* section for details.

FullCapRep Register (010h)

Register Type: Capacity

Nonvolatile Backup and Restore: nFullCapRep (1A9h) or nFullCapNom (1A5h)

This register reports the full capacity that goes with RepCap, generally used for reporting to the user. A new full-capacity value is calculated at the end of every charge cycle in the application.

TTE Register (011h)

Register Type: Time

Nonvolatile Backup: None

The TTE register holds the estimated time-to-empty for the application under present temperature and load conditions. The TTE value is determined by dividing the AvCap register by the AvgCurrent register. The corresponding AvgCurrent filtering gives a delay in TTE empty, but provides more stable results.

TTF Register (020h)

Register Type: Time

Nonvolatile Backup: None

The TTF register holds the estimated time to full for the application under present conditions. The TTF value is determined by learning the constant current and constant voltage portions of the charge cycle based on experience of prior charge cycles. Time-to-full is then estimated by comparing present charge current to the charge termination current. Operation of the TTF register assumes all charge profiles are consistent in the application. See the Typical Operating Characteristics for sample performance.

Age Register (007h)

Register Type: Percentage

Nonvolatile Backup: None

The Age register contains a calculated percentage value of the application's present cell capacity compared to its expected capacity. The result can be used by the host to gauge the battery pack health as compared to a new pack of the same type. The equation for the register output is:

Age Register = 100% x (*FullCapNom* register/*DesignCap* register)

Cycles Register (017h) and nCycles (1A4h)

Register Type: Special

Nonvolatile Backup and Restore: nCycles (1A4h)

The Cycles register maintains a total count of the number of charge/discharge cycles of the cell that have occurred. The result is stored as a percentage of a full cycle. For example, a full charge/discharge cycle results in the Cycles register incrementing by 100%. The Cycles register has a full range of 0 to 16383 cycles with a 25.0% LSb. Cycles is periodically saved to nCycles to provide a long term nonvolatile cycle count.

Table 44. Cycles Register (017h) Format

D15	D14	D13	D12	D11	D10	D9	D8	D7	D6	D5	D4	D3	D2	D1	D0
CycleCount (LSb 25%)															

Table 45. nCycles Register (1A4h) Format

D15	D14	D13	D12	D11	D10	D9	D8	D7	D6	D5	D4	D3	D2	D1	D0
CycleCount (LSb 25%, 50%, 100%, or 200%)													nFib		

The LSb of Cycles register is 25%.

The LSb of nCycles.CycleCount depends on the setting of nNVCfg2.fibScl as shown in Table 46.

Configure nFib = 0 for any new pack. nFib is a reset counter which controls Fibonacci-saving reset accelleration (see *100 Record Life Logging* section). Each reset followed by any nonvolatile save increases by 1. Maximum value is 7 without overflow.

Table 46. nNVCfg2.FibScl Setting Determines LSb of nNVCfg2.CyclesCount

NNVCFG2.FIBSCL	NCYCLES.CYCLECOUNT LSB
00b	25%
01b	50%
10b	100%
11b	200%

TimerH Register (0BEh)

Register Type: Special

Nonvolatile Backup and Restore: nTimerH (1AFh) if nNVCfg2.enT is set

Alternate Initial Value: 0x0000

This register allows the IC to track the age of the cell. An LSb of 3.2 hours gives a full scale range for the register of up to 23.94 years. If enabled, this register is periodically backed up to nonvolatile memory as part of the learning function.

FullCap Register (010h)

Register Type: Capacity

Nonvolatile Restore: Derived from nFullCapNom (1A5h)

This register holds the calculated full capacity of the cell based on all inputs from the ModelGauge m5 algorithm including empty compensation. A new full-capacity value is calculated continuously as application conditions change.

nFullCapNom Register (1A5h)

Register Type: Capacity

Nonvolatile Backup and Restore: FullCapNom (023h)

This register holds the calculated full capacity of the cell, not including temperature and empty compensation. A new full-capacity nominal value is calculated each time a cell relaxation event is detected. This register is used to calculate other outputs of the ModelGauge m5 algorithm.

RCell Register (014h)

Register Type: Resistance

Nonvolatile Backup: None

Initial Value: 0x0290

The RCell register displays the calculated internal resistance of the cell, or average internal resistance of each cell in the cell stack. RCell is determined by comparing open-circuit voltage (VFOCV) against measured voltage (VCell) over a long time period while under load current.

VRipple Register (0B2h)

Register Type: Special

Nonvolatile Backup: None

Initial Value: 0x0000

The VRipple register holds the slow average RMS value of VCell register reading variation compared to the AvgVCell register. The default filter time is 22.5s. See nRippleCfg register description. VRipple has an LSb weight of 1.25mV/128.

nVoltTemp Register (1AAh)

Register Type: Special

Nonvolatile Backup: AvgVCell and AvgTA registers if nNVCfg2.enVT = 1

This register has dual functionality depending on configuration settings. If nNVCfg2.enVT = 1, this register provides nonvolatile back up of the AvgVCell and AvgTA registers as shown in Table 47.

Table 47. nVoltTemp Register (1AAh) Format when nNVCfg2.enVT = 1

D15	D14	D13	D12	D11	D10	D9	D8	D7	D6	D5	D4	D3	D2	D1	D0
AvgVCell Upper 9 Bits									AvgTA Upper 7 Bits						

Alternatively, if nNVCfg0.enAF = 1, this register stores an accumulated age slope value to be used with the Age Forecasting algorithm. Regardless of which option is enabled, this register is periodically saved to nonvolatile memory as part of the learning function. If neither option is enabled, this register can be used as general purpose user memory.

SOCHold Register (0D0h)

Register Type: Special

The SOCHold register configures operation of the hold before empty feature and also the enable bit for 99% hold during charge. The default value for SOCHold is 0x1002. Table 48 shows the SOCHold register format.

Table 48. SOCHold (0D0h) Format

D15	D14	D13	D12	D11	D10	D9	D8	D7	D6	D5	D4	D3	D2	D1	D0
0	0	0	99%HoldEn	EmptyVoltHold							EmptySocHold				

EmptyVoltHold: The positive voltage offset that is added to VEmpty. At VCell = VEmpty + EmptyVoltHold point, the empty detection/learning is occured. EmptyVoltHold has an LSb of 10mV giving a range of 0 to 1270mV.

EmptySocHold: It is the RepSOC at which RepSOC is held constant. After empty detection/learning occurs, RepSOC update continues as expected. EmptySocHold has an LSb of 0.5%, giving it a full range of 0 to 15.5%.

99%HoldEn: Enable bit for 99% hold feature during charging. When enabled, RepSOC holds a maximum value of 99% until Full Qualified is reached.

ModelGauge m5 EZ Performance

ModelGauge m5 EZ performance provides plug-and-play operation of the IC. While the MAX1730x/MAX1731x can be custom tuned to the applications battery through a characterization process for ideal performance, the IC has the ability to provide reasonable performance for most applications with no custom characterization required.

While EZ performance provides reasonable performance for most cell types, some chemistries such as lithium-iron-phosphate ($LiFePO_4$) and Panasonic NCR/NCA series cells require custom characterization for best performance. EZ performance targets 3.3V as the empty voltage for the application. Contact Analog Devices for details of the custom characterization procedure.

OCV Estimation and Coulomb Count Mixing

The core of the ModelGauge m5 algorithm is a mixing algorithm that combines the OCV state estimation with the coulomb counter. After power-on reset of the IC, coulomb-count accuracy is unknown. The OCV state estimation is weighted heavily compared to the coulomb count output. As the cell progresses through cycles in the application, coulomb-counter accuracy improves and the mixing algorithm alters the weighting so that the coulomb-counter result is dominant. From this point forward, the IC switches to servo mixing. Servo mixing provides a fixed magnitude continuous error correction to the coulomb count, up or down, based on the direction of error from the OCV estimation. This allows differences between the coulomb count and OCV estimation to be corrected quickly. See Figure 14.

The resulting output from the mixing algorithm does not suffer accumulation drift from current measurement offset error and is more stable than a stand-alone OCV estimation algorithm. See Figure 15. Initial accuracy depends on the relaxation state of the cell. The highest initial accuracy is achieved with a fully relaxed cell.

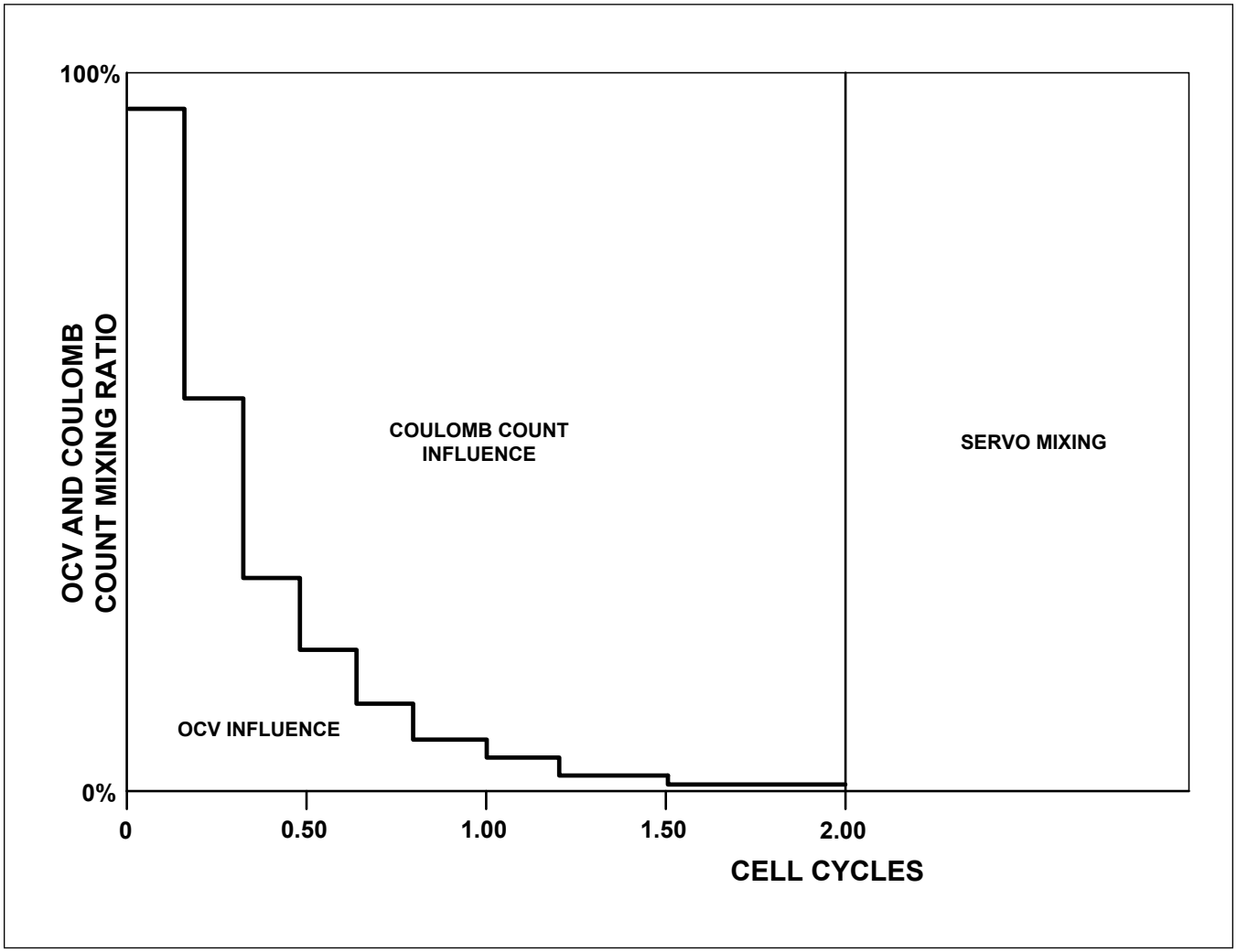

Figure 14. Voltage and Coulomb Count Mixing

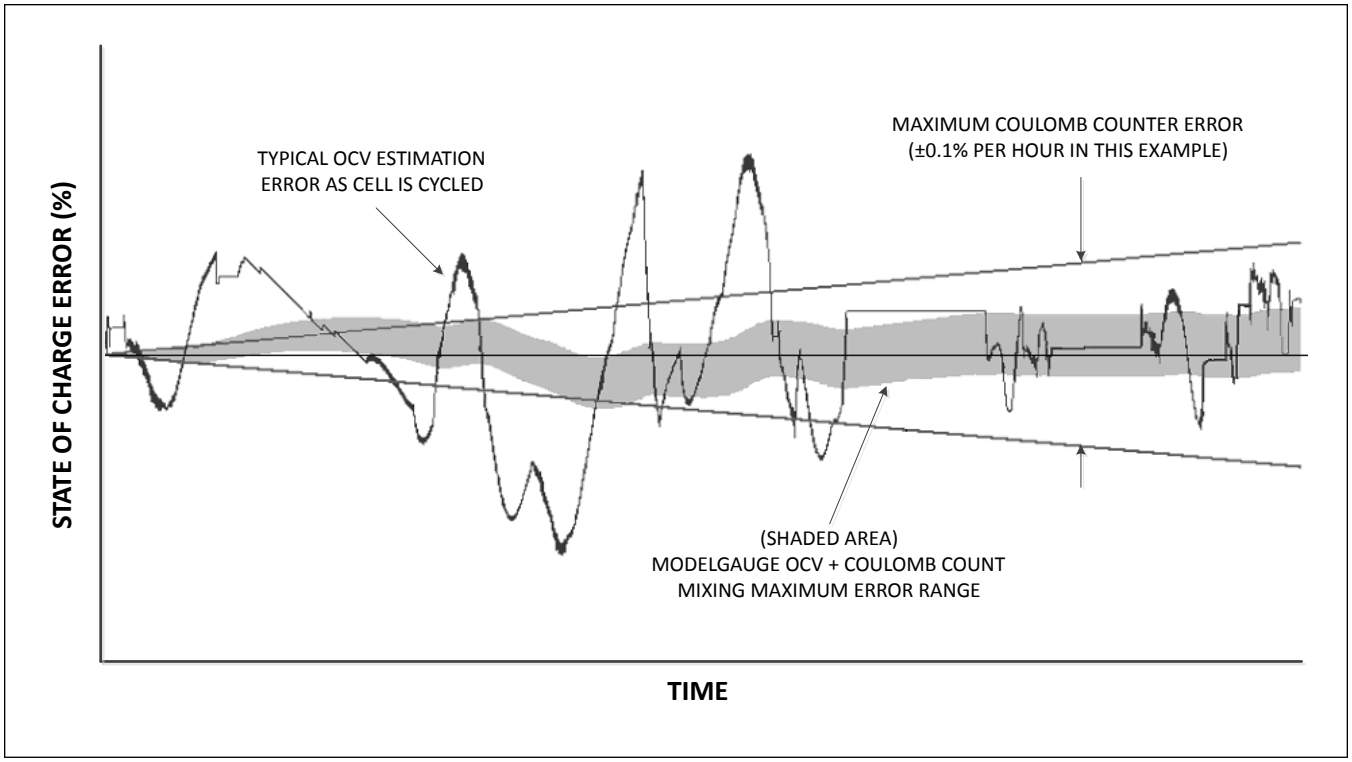

Figure 15. ModelGauge m5 Typical Accuracy Example

Empty Compensation

As the temperature and discharge rate of an application changes, the amount of charge available to the application also changes. The ModelGauge m5 algorithm distinguishes between remaining capacity of the cell, remaining capacity of the application, and reports both results to the user.

The MixCap output register tracks the charge state of the cell. This is the theoretical mAh of charge that can be removed from the cell under ideal conditions—extremely low discharge current and independent of cell voltage. This result is not affected by application conditions such as cell impedance or minimum operating voltage of the application. ModelGauge m5 continually tracks the expected empty point of the application in mAh. This is the amount of charge that cannot be removed from the cell by the application because of minimum voltage requirements and internal losses of the cell. The IC subtracts the amount of charge not available to the application from the MixCap register and reports the result in the AvCap register.

Since available remaining capacity is highly dependent on discharge rate, the AvCap register can be subject to large instantaneous changes as the application load current changes. The result can increase, even while discharging, if the load current suddenly drops. This result, although correct, can be very counter-intuitive to the host software or end user. The RepCap output register contains a filtered version of AvCap that removes any abrupt changes in remaining capacity. RepCap converges with AvCap over time to correctly predict the application empty point while discharging or the application full point while charging. Figure 16 shows the relationship of these registers.

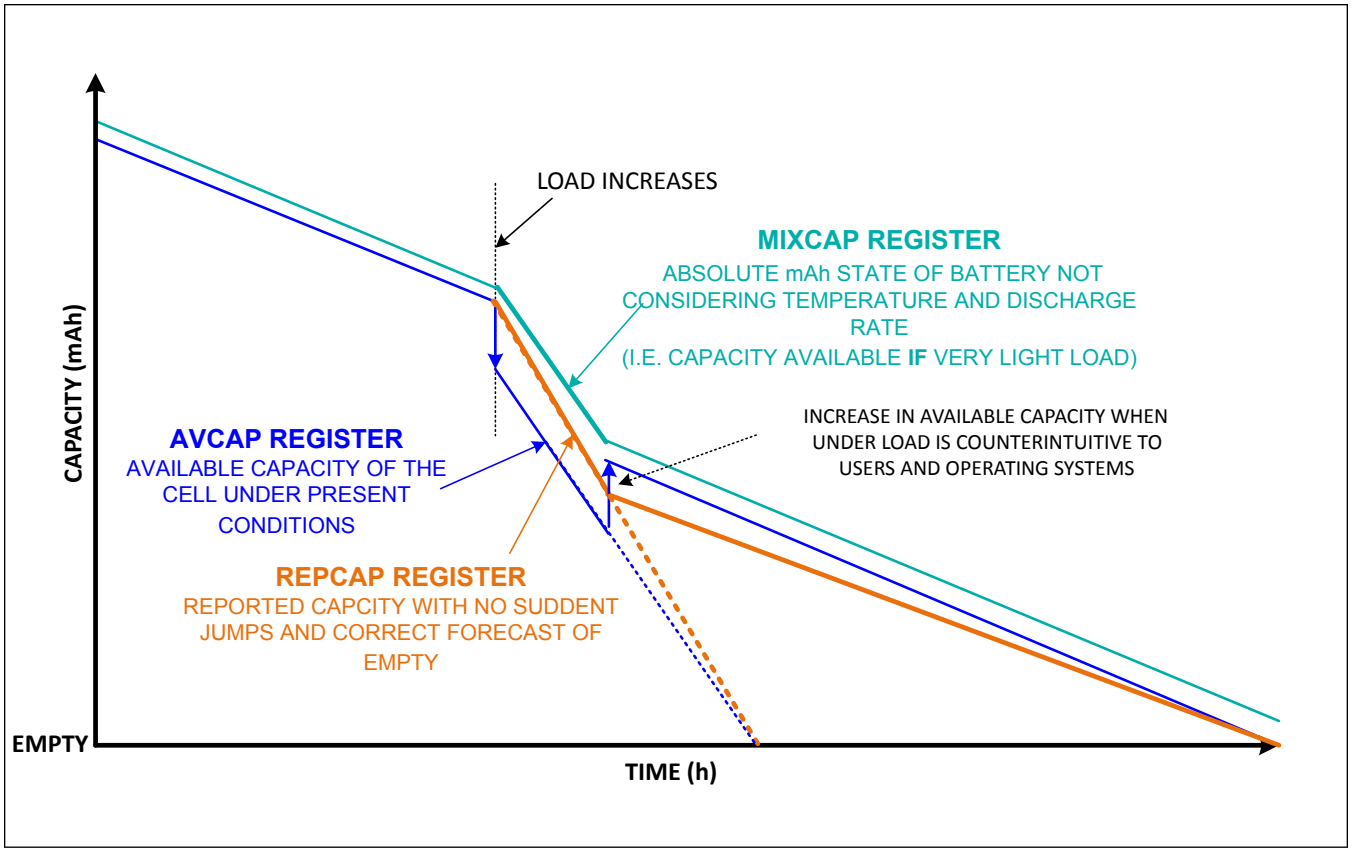

Figure 16. Handling Changes in Empty Calculation

End-of-Charge Detection

The IC detects the end of a charge cycle when the application current falls into the band set by the IChgTerm register value while the VFSOC value is above the FullSOCThr register value. By monitoring both the Current and AvgCurrent registers, the device can reject false end-of-charge events such as application load spikes or early charge-source removal. See the End-of-Charge Detection graph in the Typical Operating Characteristics and Figure 17. When a proper end-of-charge event is detected, the device learns a new FullCapRep register value based on the RepCap register output. If the old FullCapRep value was too high, it is adjusted on a downward slope near the end-of-charge as defined by the MiscCfg.FUS setting until it reaches RepCap. If the old FullCapRep was too low, it is adjusted upward to match RepCap. This prevents the calculated state-of-charge from ever reporting a value greater than 100%. See Figure 18.

Charge termination is detected by the IC when the following conditions are met:

- VFSOC register > FullSOCThr register
- AND IChgTerm x 0.125 < Current register < IChgTerm x 1.25
- AND IChgTerm x 0.125 < AvgCurrent register < IChgTerm x 1.25

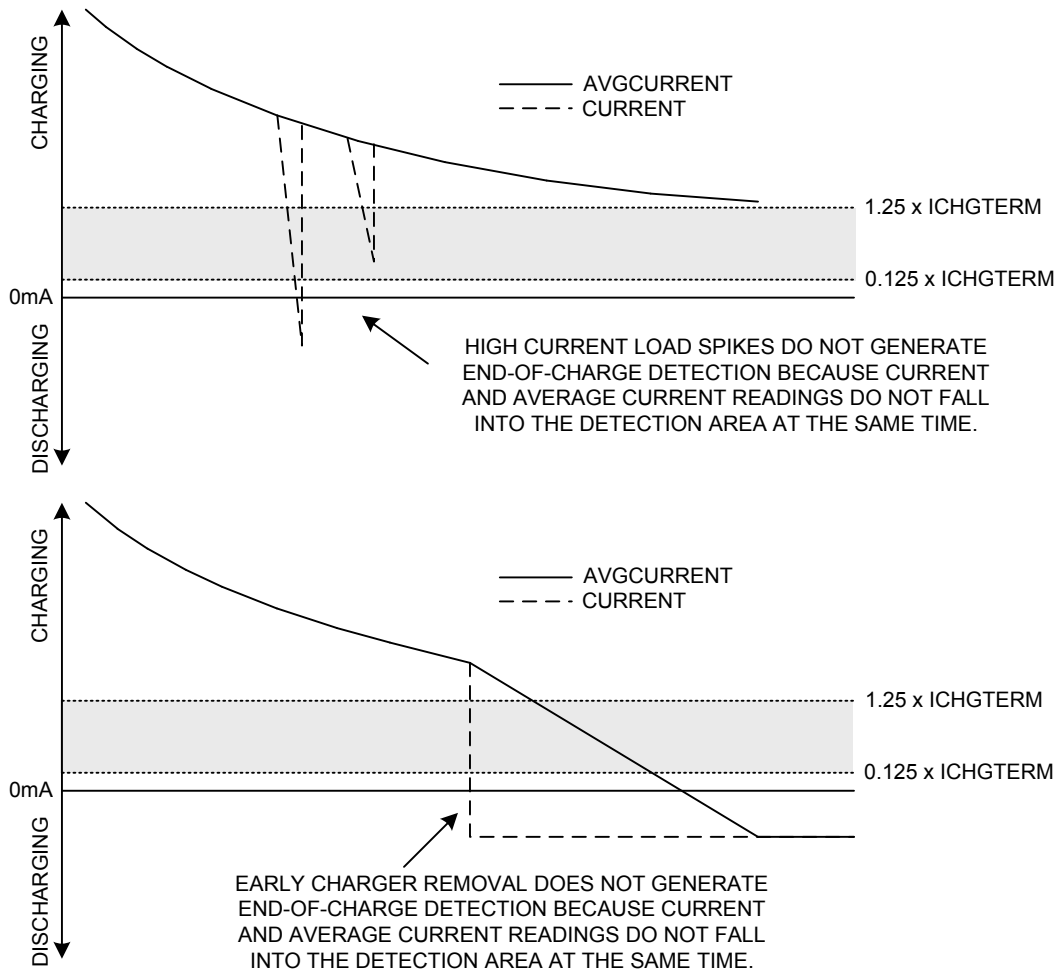

Figure 17. False End-of-Charge Events

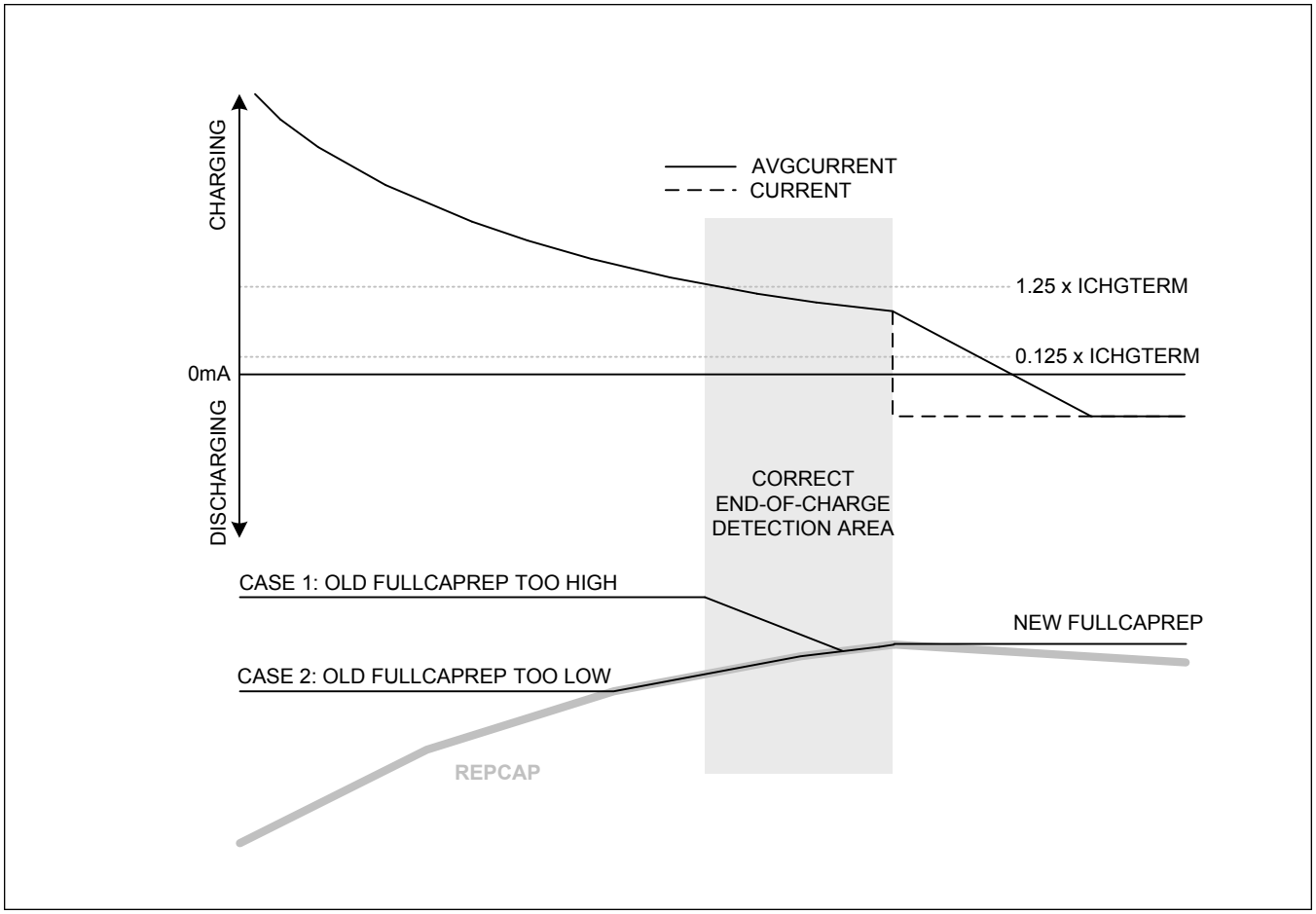

Figure 18. FullCapRep Learning at End-of-Charge

Smart-Full (MAX17300/MAX17310 Only)

Smart-full charge termination declares an end-of-charge based on the true state of the battery as determined by the open-circuit-voltage (OCV) of the cell. Typical end-of-charge detection is highly variable with temperature and state of the battery. Relying on the OCV of the cell for charge termination is highly reliable as shown in Figure 19.

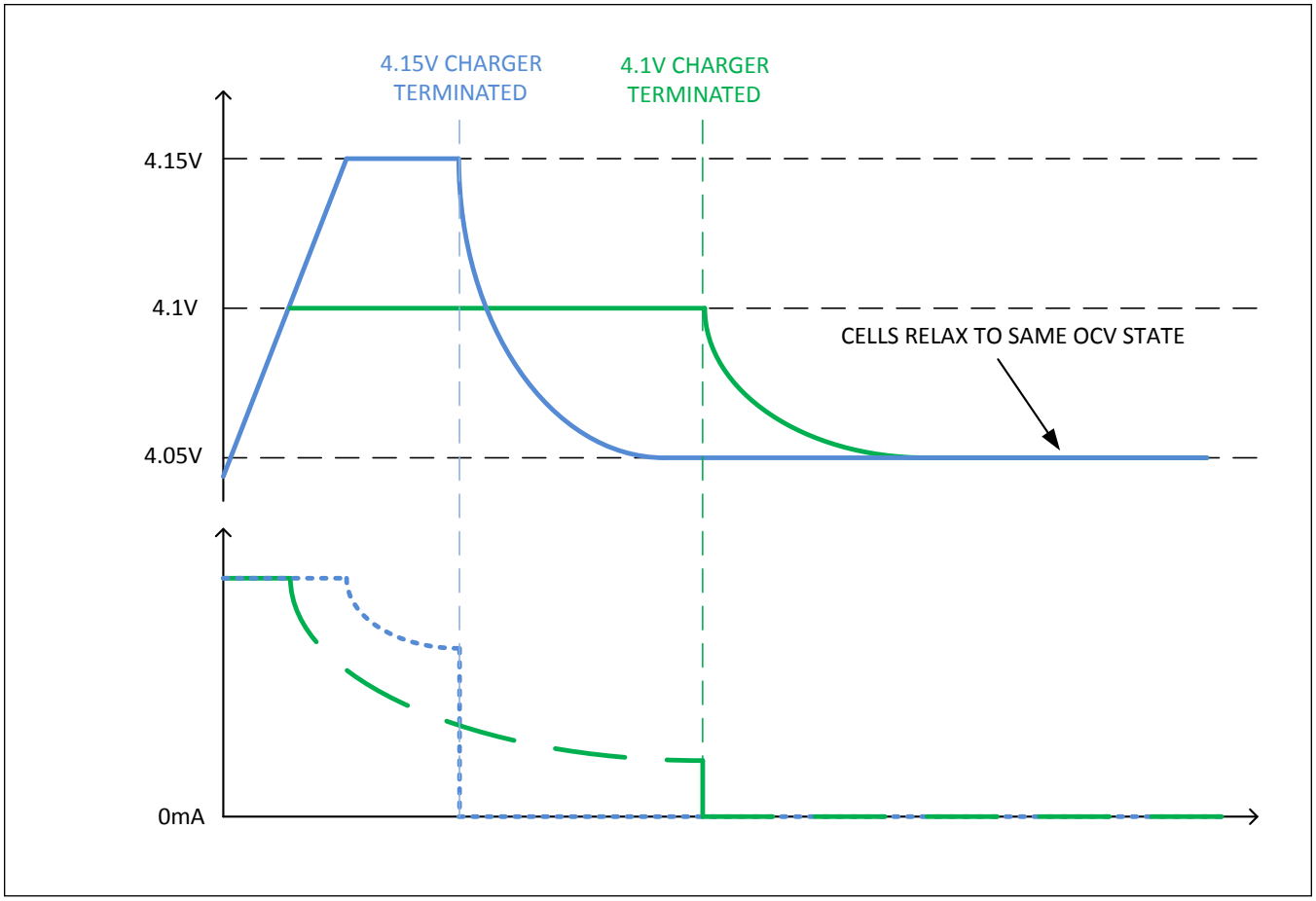

Figure 19. Smart-Full Example

Smart-full enables:

- **Lifespan extension combined with faster charging.** Smart-full is an alternative to reduced charging voltage (for example 4.1V charging) to extend the life of a battery. Smart-full offers an alternative strategy allowing conventional charge voltage (example 4.15V). Smart-full controls termination to the same battery state as the reduced charger voltage approach.
- **Faster charging to normal state by charging to higher cell voltage**. Smart-full allows a higher charging voltage to be used, but prevents the OCV of the cell from exceeding the user-defined smart-full threshold.
- **Better normal charge termination**. Better control of charge termination even for normal 4.2V charging. Smart-full is more accurate than the traditional charge current termination approach. It is especially robust against:
  - Adapter current limit interaction
  - Recharging near full
  - Charge control at hot and cold
  - Aged battery

The MAX17300/MAX17310 support smart-full charge termination and open the CHG FET when the VFOCV (estimated open-circuit voltage) is greater than the smart-full threshold and the *nDelayCfg*.FullTimer expires. See *nMiscCfg2* for details.

Fuel Gauge Learning

The IC periodically makes internal adjustments to cell characterization and application information to remove initial error and maintain accuracy as the cell ages. These adjustments always occur as small under-corrections to prevent instability of the system and prevent any noticeable jumps in the fuel-gauge outputs. Learning occurs automatically without any input from the host. In addition to estimating the battery's state-of-charge, the IC observes the battery's relaxation response and adjusts the dynamics of the voltage fuel gauge. Registers used by the algorithm include:

• **Application Capacity (FullCapRep Register).** This is the total capacity available to the application at full, set through the IChgTerm and FullSOCThr registers as described in the *End-of-Charge Detection* section. See the FullCapRep register description.

• **Cell Capacity (FullCapNom Register).** This is the total cell capacity at full, according to the voltage fuel gauge. This includes some capacity that is not available to the application at high loads and/or low temperature. The IC periodically compares percent change based on an open circuit voltage measurement vs. coulomb-count change as the cell charges and discharges, maintaining an accurate estimation of the pack capacity in mAh as the pack ages. See Figure 20.

• **Voltage Fuel-Gauge Adaptation.** The IC observes the battery's relaxation response and adjusts the dynamics of the voltage fuel gauge. This adaptation adjusts the RComp0 register during qualified cell relaxation events.

• **Empty Compensation.** The IC updates internal data whenever cell empty is detected (VCell < VEmpty) to account for cell age or other cell deviations from the characterization information.

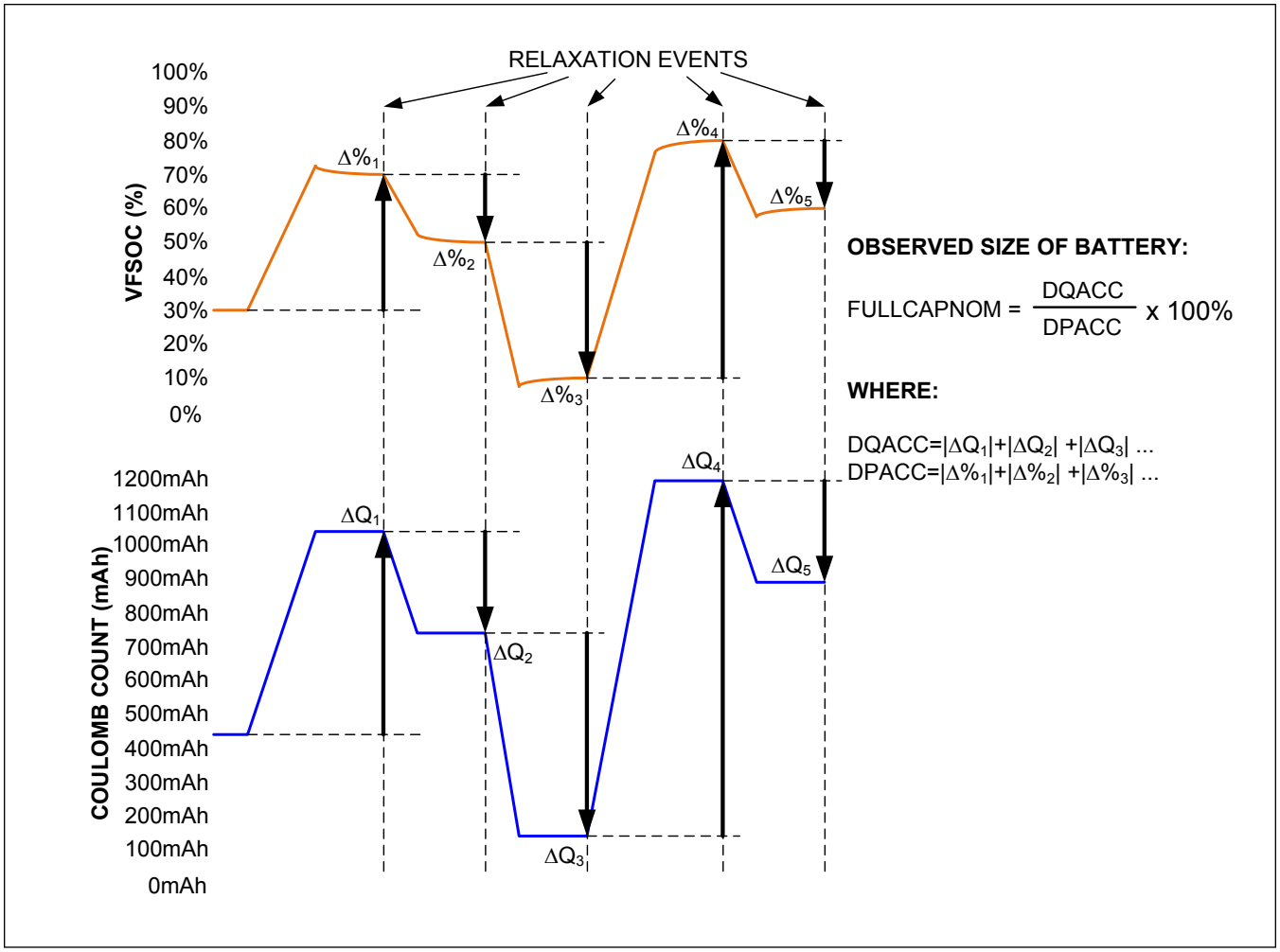

Figure 20. FullCapNom Learning

Converge-To-Empty

The MAX1730x/MAX1731x includes a feature that guarantees the fuel gauge output converges to 0% as the cell voltage approaches the empty voltage. As the cell's voltage approaches the expected empty voltage (AvgVCell approaches VEmpty) the IC smoothly adjusts the rate of change of RepSOC so that the fuel gauge reports 0% at the exact time the cell's voltage reaches empty. This prevents minor over or under-shoots in the fuel gauge output. See Figure 21.

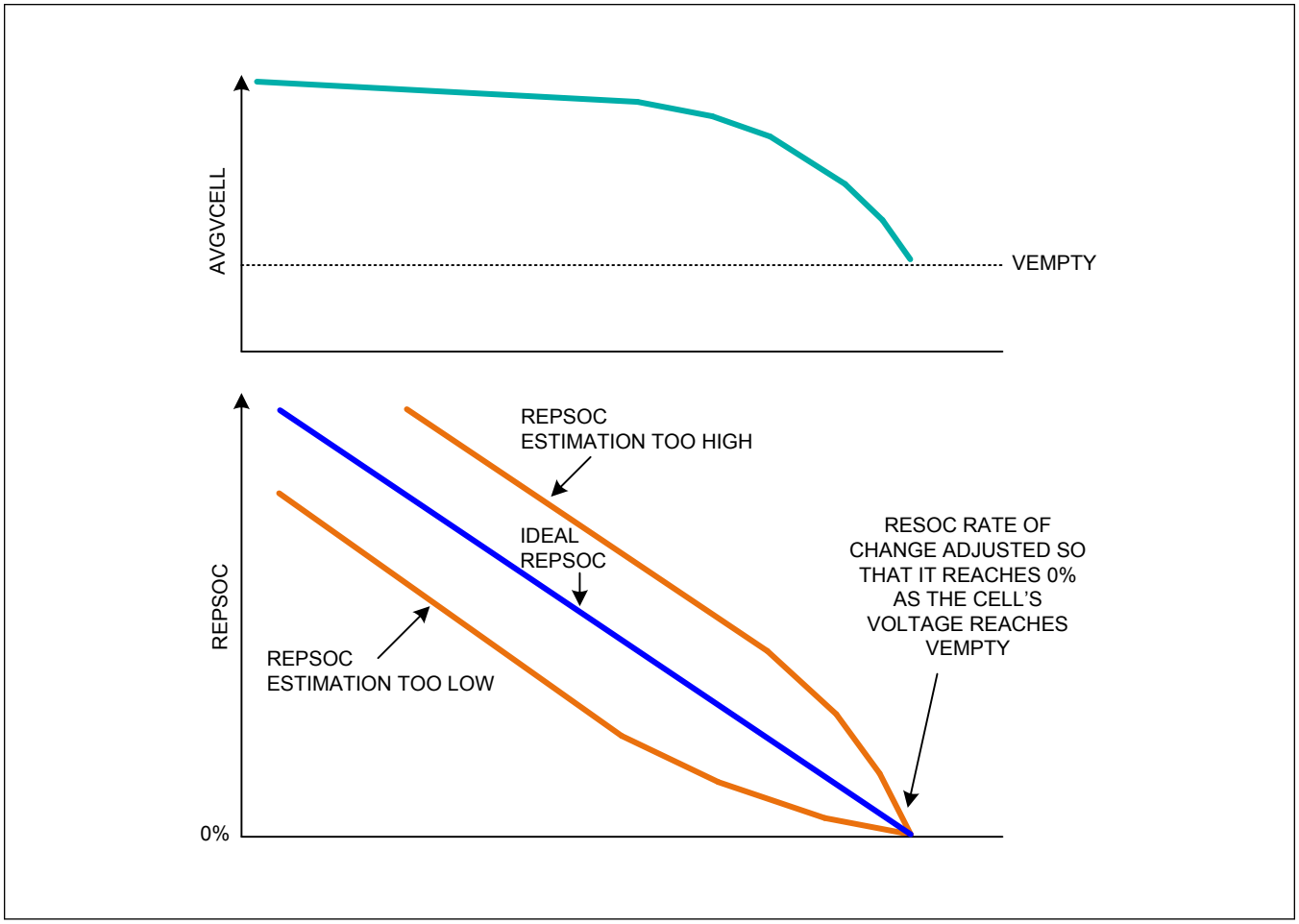

Figure 21. Converge-To-Empty

Determining Fuel-Gauge Accuracy

To determine the true accuracy of a fuel gauge, as experienced by end users, the battery should be exercised in a dynamic manner. The end-user accuracy cannot be understood with only simple cycles. To challenge a correction-based fuel gauge, such as a coulomb counter, test the battery with partial loading sessions. For example, a typical user may operate the device for 10 minutes and then stop use for an hour or more. A robust test method includes these kinds of sessions many times at various loads, temperatures, and duration. Refer to the Application Note 4799: *Cell Characterization Procedure for a ModelGauge m3/ModelGauge m5 Fuel Gauge.*

Initial Accuracy

The IC uses the first voltage reading after power-up or after cell is connected to the IC to determine the starting output of the fuel gauge. It is assumed that the cell is fully relaxed prior to this reading; however, this is not always the case. If there is a load or charge current at this time, the initial reading is compensated using the characterized internal impedance of the cell (RFast register) to estimate the cell's relaxed voltage. If the cell was recently charged or discharged, the voltage measured by the IC may not represent the true state-of-charge of the cell, resulting in initial error in the fuel gauge outputs. In most cases, this error is minor and is quickly removed by the fuel gauge algorithm during the first hour of normal operation.

Cycle+ Age Forecasting

A special feature of the ModelGauge m5 algorithm is the ability to forecast the number of cycles a user is able to get out of the cell during its lifetime. This allows an application to adjust a cell's charge profile over time to meet the cycle life requirements of the cell. See Figure 22. The algorithm monitors the change in cell capacity over time and calculates the number of cycles it takes for the cell's capacity to drop to a predefined threshold of 85% of original. Remaining cycles below 85% of the original capacity are unpredictable and not managed by age forecasting.

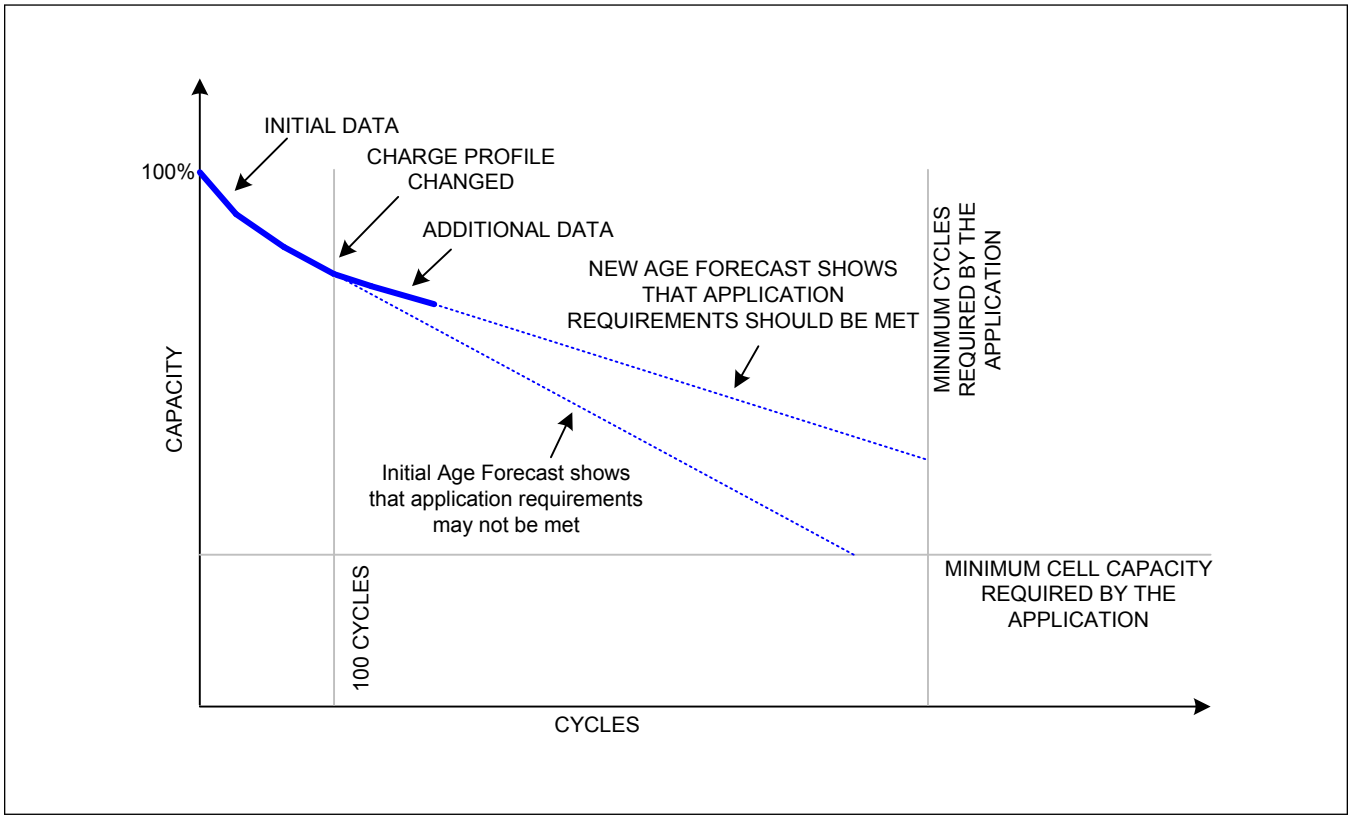

Figure 22. Benefits of Age Forecasting

nAgeFcCfg Register (1E2h)

Register Type: Special

Nonvolatile Restore: There is no associated restore location for this register.

The nAgeFcCfg register is used to configure age forecasting functionality. Register data is nonvolatile and is typically configured only once during pack assembly. Table 49 shows the register format.

Table 49. nAgeFcCfg Register (1E2h) Format

D15	D14	D13	D12	D11	D10	D9	D8	D7	D6	D5	D4	D3	D2	D1	D0
DeadTargetRatio				CycleStart							0	0	0	1	1

DeadTargetRatio: Sets the remaining percentage of initial cell capacity where the cell is considered fully aged. DeadTargetRatio can be adjusted between 75% and 86.72% with an LSb of 0.7813%. For example, if age forecasting was configured to estimate the number of cycles until the cell's capacity dropped to 85.1574% of when it was new, DeadTargetRatio should be programmed to 1101b.

CycleStart: Sets the number of cell cycles before age forecasting calculations begin. CycleStart has a range of 0.00

to 81.92 cycles with an LSb of 0.64 cycles. Since age forecasting estimation becomes more accurate over time, most applications use a default value of 30 cycles.

0: Always write this location 0.

1: Always write this location 1.

AgeForecast Register (0B9h)

Register Type: Special

Nonvolatile Backup: None

The AgeForecast register displays the estimated cycle life of the application cell. The AgeForecast value should be compared against the Cycles (017h) register to determine the estimated number of remaining cell cycles. This is accomplished by accumulating the capacity loss per cycle as the cell ages. The result becomes more accurate with each cycle measured. The AgeForecast register has a full range of 0 cycles to 16383 cycles with a 25% LSb. This register is recalculated from learned information at power-up.

Age Forecasting Requirements

There are several requirements for proper operation of the age forecasting feature as follows:

1. There is a minimum and maximum cell size that the age forecasting algorithm can handle. Table 50 shows the allowable range of cell sizes that can be accurately age forecasted depending on the size of the sense resistor used in the application. Note this range is different from the current and capacity measurement range for a given sense resistor. See the *Current Measurement* section for details.

2. Age forecasting requires a minimum of 100 cycles before achieving reasonable predictions. Ignore the age forecasting output until then.

3. Age forecasting requires a custom characterized battery model to be used by the IC. Age forecasting is not valid when using the default model.

Table 50. Minimum and Maximum Cell Sizes for Age Forecasting

SENSE RESISTOR (Ω)	MINIMUM CELL SIZE FOR FORECASTING (mAh)	MAXIMUM CELL SIZE FOR FORECASTING (mAh)
0.005	1600	5000
0.010	800	2500
0.020	400	1250

Enabling Age Forecasting

The following steps are required to enable the Age Forecasting feature:

1. Set nNVCfg2.enVT = 0. This function conflicts with age forecasting and must be disabled.

2. Set nFullCapFlt to the value of nFullCapNom.

3. Set nVoltTemp to 0x0001.

4. Set nNVCfg0.enAF = 1 to begin operation.

Battery Life Logging

The MAX1730x/MAX1731x has the ability to log learned battery information providing the host with a history of conditions experienced by the cell pack over its life time. The IC can store up to 100 snapshots of page 1Ah in nonvolatile memory. Individual registers from page 1Ah are summarized in Table 51. Their nonvolatile backup must be enabled and LOCK1 must be unlocked in order for logging to occur. See each register's detailed description in other sections of this data sheet. The logging rate follows the "Fibonacci Saving" interval to provide recurring log-saving according to the expected battery lifespan and is configured by nNVCFG2.FibMax and nNVCFG2.FibScl. See the *100 Record Life Logging* section for more details.

Table 51. Life Logging Register Summary

REGISTER ADDRESS	REGISTER NAME	FUNCTION
1A0h	nQRTable00	Learned characterization information used to determine when the cell pack is empty under application conditions.
1A1h	nQRTable10	
1A2h	nQRTable20	
1A3h	nQRTable30	
1A4h	nCycles	Total number of equivalent full cycles seen by the cell since assembly.
1A5h	nFullCapNom	Calculated capacity of the cell independent of application conditions.
1A6h	nRComp0	Learned characterization information related to the voltage fuel gauge.
1A7h	nTempCo	
1A8h	nBattStatus	Contains the permanent battery status information.
1A9h	nFullCapRep	Calculated capacity of the cell under present application conditions.
1AAh	nVoltTemp	The average voltage and temperature seen by the IC at the instance of learned data backup. If Age Forecasting is enabled, this register contains different information.
1ABh	nMaxMinCurr	Maximum and minimum current, voltage, and temperature seen by the IC during this logging window.
1ACh	nMaxMinVolt	
1ADh	nMaxMinTemp	
1AEh	nFaultLog/ nFullCapFlt	If Fault Logging is enabled, this register contains a history of any faults that have occurred during this life segment. If Age Forecasting is enabled, this register contains a highly filtered nFullCapNom.
1AFh	nTimerH	Total elapsed time since cell pack assembly not including time spent in shutdown mode.

Life Logging Data Example

Figure 23 shows a graphical representation of sample history data read from an IC. Analysis of this data can provide information of cell performance over its lifetime as well as detect any application anomalies that may have affected performance.

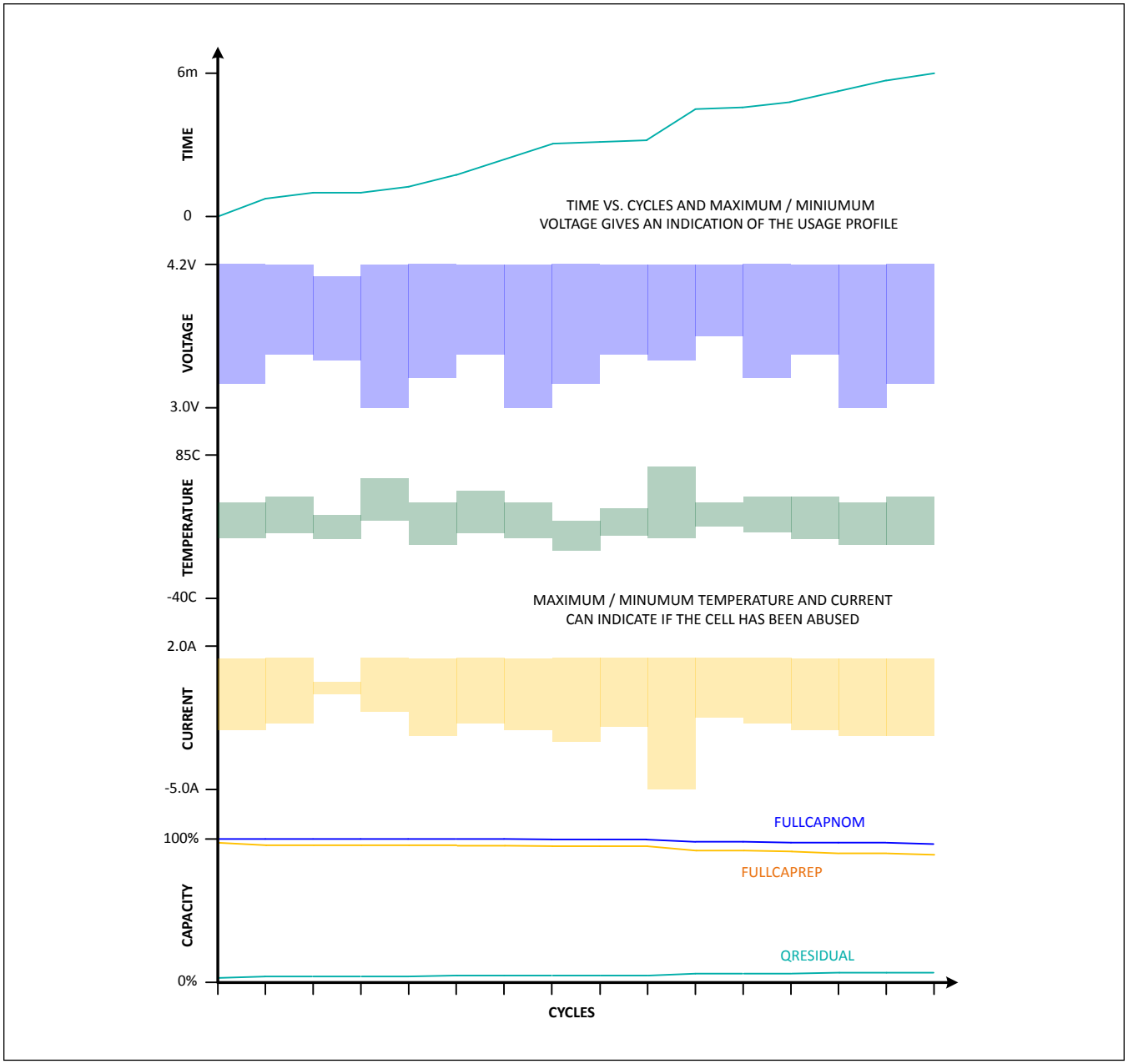

Figure 23. Sample Life Logging Data

Determining Number of Valid Logging Entries

While logging data, the IC begins on history page 1 and continues until all history memory has been used at page 100. Prior to reading history information out of the IC, the host must determine which history pages has been written and which, if any, had write errors and should be ignored. Each page of history information has two associated write flags that indicate if the page has been written and two associated valid flags which indicate if the write was successful. The HISTORY RECALL command [0xE2XX] is used to load the history flags into page 1Fh of IC memory where the host can then read their state. Table 52 shows which command and which page 1Fh address has the flag information for a given history page. For example, to see the write flag information of history pages 1-8, send the 0xE29C command then read address 1F2h. To see the **valid flag** information of pages 1-8, send the 0xE29C command and then read address 1FFh.

Table 52. Reading History Page Flags

ASSOCIATED HISTORY PAGES	COMMAND TO RECALL WRITE FLAGS	WRITE FLAG ADDRESS	COMMAND TO RECALL VALID FLAGS	VALID FLAG ADDRESS
1-8	0xE29C	1F2h	0xE29C	1FFh
9-16		1F3h	0xE29D	1F0h
17-24		1F4h		1F1h
25-32		1F5h		1F2h
33-40		1F6h		1F3h
41-48		1F7h		1F4h
49-56		1F8h		1F5h
57-64		1F9h		1F6h
65-72		1FAh		1F7h
73-80		1FBh		1F8h
81-88		1FCh		1F9h
89-96		1FDh		1FAh
97-100		1FEh		1FBh

Once the write flag and valid flag information is read from the IC, it must be decoded. Each register holds two flags for a given history page. Figure 24 shows the register format. The flags for a given history page are always spaced 8-bits apart from one another. For example, history page 1 flags are always located at bit positions D0 and D8, history page 84 flags are at locations D3 and D11, etc. Note that the last flag register contains information for only 3 pages, in this case the upper 5-bits of each byte should be ignored.

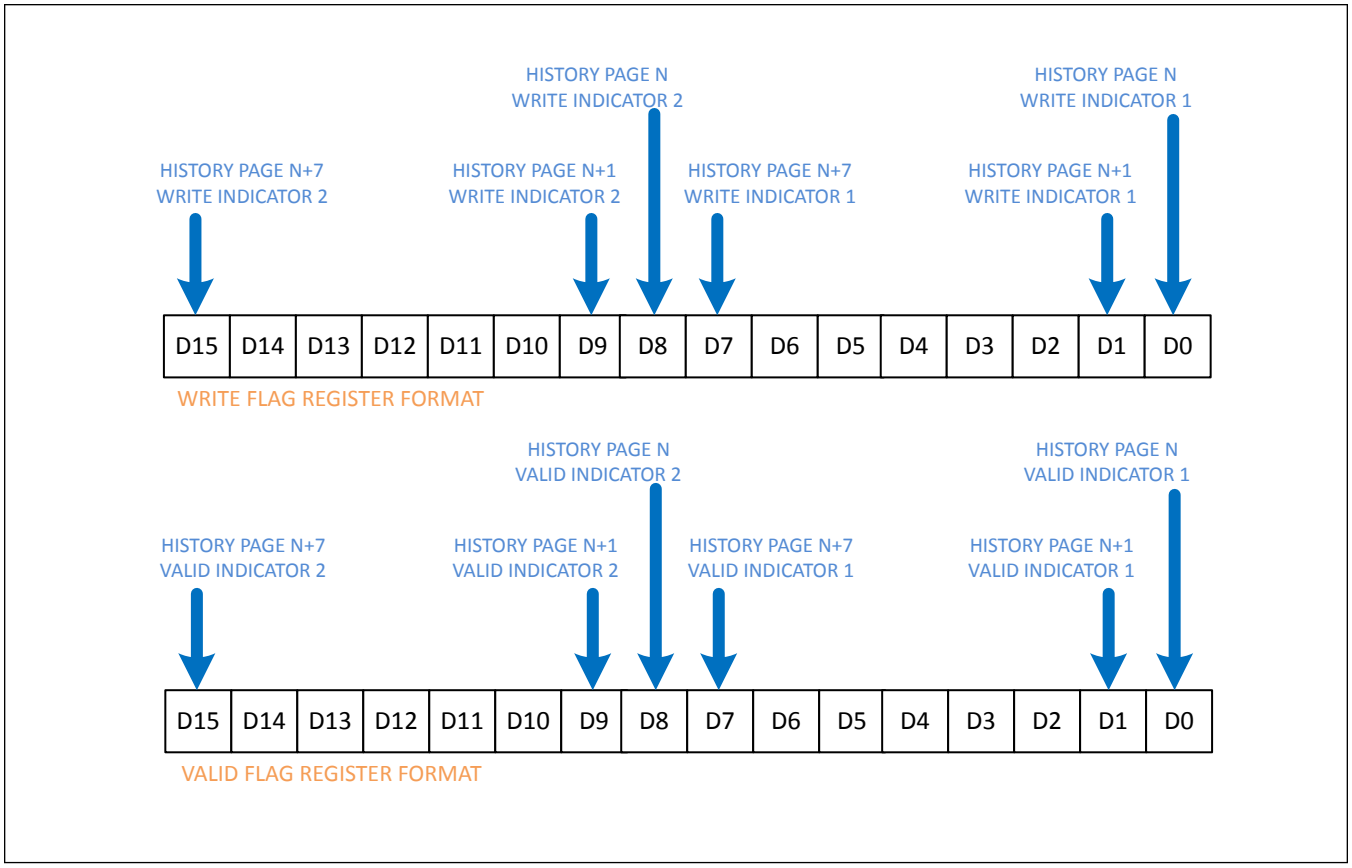

Figure 24. Write Flag Register and Valid Flag Register Formats

Once all four flags for a given history page are known, the host can determine if the history page contains valid data. If either write flag is set then data has been written to that page by the IC. If both write flags are clear, the page has not yet been written. Due to application conditions, the write may not have been successful. Next check the valid flags. If either valid flag is set, the data should be considered good. If both valid flags are clear then the data should be considered bad and the host should ignore it. Table 53 shows how to decode the flags.

Table 53. Decoding History Page Flags

WRITE INDICATOR 1	WRITE INDICATOR 2	VALID INDICATOR 1	VALID INDICATOR 2	PAGE STATUS
0	0	X	X	Page empty.
1	X	0	0	Write failure. Page has invalid data.
		1	X	Write success. Page has valid data.
		X	1	
X	1	0	0	Write failure. Page has invalid data.
		1	X	Write success. Page has valid data.
		X	1	

Reading History Data

Once all pages of valid history data have been identified, they can be read from the IC using the HISTORY RECALL command. Table 54 shows the command and history page relationship. After sending the command, wait t_{RECALL}, then read the history data from IC page 1Fh. Each page of history data has the same format as page 1Ah. For example, nCycles is found at address 1A4h and nCycles history are at 1F4h, nTimerH is located at address 1AFh and nTimerH history is located at address 1FFh, etc.

Table 54. Reading History Data

COMMAND	HISTORY PAGE RECALLED TO PAGE 1EH
0xE22E	Page 1
0xE22F	Page 2
...	...
0xE291	Page 100

History Data Reading Example

The host would like to read the life logging data from a given IC. The host must first determine how many history pages have been written and if there are any errors. To start checking history page 1, the host sends 0xE29C to the command register, wait t_{RECALL}, then read location 1F2h. If either the D0 or the D8 bit in the read data word is a logic 1, the host knows that history page 1 contains history data. The host can then check page 2 (bits D1 and D9) up to page 7 (bits D7 and D15). The host continues on to pages 8 to 16 by reading location 1F3h, and then repeating individual bit testing. This process is repeated for each command and address listed in Table 52 until the host finds a history page where both write flags read logic 0. This is the first unwritten page. All previous pages contain data, all following pages are empty.

The host must now determine which, if any, of the history pages have bad data and must be ignored. The above process is repeated for every location looking at the valid flags instead of the write flags. Any history page where both valid flags read logic 0 is considered bad due to a write failure and that page should be ignored. Once the host has a complete list of valid written history pages, commands 0xE22E to 0xE291 can be used to read the history information from page 1Fh for processing.

Note that this example was simplified in order to describe the procedure. A more efficient method would be for the host to send a history command once and then read all associated registers. For example, the host could send the 0xE29C command once and then read the entire memory space of 1F0h to 1FFh which would contain all write flags for pages 1 to 100 (1F2h to 1FEh) and all valid flags for pages 1 to 8 (1FFh). This applies for all 0xE2XX history commands.

See *Appendix A: Reading History Data Pseudo-Code Example* section for a psuedo-code example of reading history data.

ModelGauge m5 Algorithm Input Registers

The following registers are inputs to the ModelGauge algorithm and store characterization information for the application cells as well as important application specific specifications. They are described only briefly here. Contact Analog Devices for information regarding cell characterization.

nXTable0 (180h) to nXTable11 (18Bh) Registers

Register Type: Special

Nonvolatile Restore: There are no associated restore locations for these registers.

Cell characterization information used by the ModelGauge algorithm to determine capacity versus operating conditions. This table comes from battery characterization data. These are nonvolatile memory locations.

nOCVTable0 (190h) to nOCVTable11 (19Bh) Registers

Register Type: Special

Nonvolatile Restore: There are no associated restore locations for these registers.

Cell characterization information used by the ModelGauge algorithm to determine capacity versus operating conditions.

This table comes from battery characterization data. These are nonvolatile memory locations.

nQRTable00 (1A0h) to nQRTable30 (1A3h) Registers

Register Type: Special

Nonvolatile Backup and Restore: QRTable00 to QRTable30 (012h, 022h, 032h, 042h)

The nQRTable00 to nQRTable30 register locations contain characterization information regarding cell capacity that is not available under certain application conditions.

nFullSOCThr Register (1C6h)

Register Type: Percentage

Nonvolatile Restore: FullSOCThr (013h) if nNVCfg1.enFT is set.

Alternate Initial Value: 80%

The nFullSOCThr register gates detection of end-of-charge. VFSOC must be larger than the nFullSOCThr value before nIChgTerm is compared to the AvgCurrent register value. The recommended nFullSOCThr register setting for most custom characterized applications is 95% . For EZ performance applications, the recommendation is 80% (0x5005). See the nIChgTerm register description and *End-of-Charge Detection* section for details. Table 55 shows the register format.

Table 55. nFullSOCThr (1C6h)/FullSOCThr (013h) Register Format

D15	D14	D13	D12	D11	D10	D9	D8	D7	D6	D5	D4	D3	D2	D1	D0
nFullSOCThr													1	0	1

nVEmpty Register (19Eh)

Register Type: Special

Nonvolatile Restore: VEmpty (03Ah) if nNVCfg0.enVE is set

Alternate Initial Value: 0xA561

The nVempty register sets thresholds related to empty detection during operation. Table 56 shows the register format.

Table 56. VEmpty (03Ah)/nVEmpty (19Eh) Register Format

D15	D14	D13	D12	D11	D10	D9	D8	D7	D6	D5	D4	D3	D2	D1	D0
VE									VR						

VE: Empty Voltage. Sets the voltage level for detecting empty. A 10mV resolution gives a 0 to 5.11V range. This value is written to 3.3V after reset if nonvolatile backup is disabled.

VR: Recovery Voltage. Sets the voltage level for clearing empty detection. Once the cell voltage rises above this point, empty voltage detection is re-enabled. A 40mV resolution gives a 0 to 5.08V range. This value is written to 3.88V after reset if nonvolatile backup is disabled.

nDesignCap Register(1B3h)

Register Type: Capacity

Nonvolatile Restore: DesignCap (018h) if nNVCfg0.enDC is set

Alternate Initial Value: FullCapRep register value

The nDesignCap register holds the expected capacity of the cell. This value is used to determine age and health of the cell by comparing against the measured present cell capacity.

nRFast Register (1E5h)

Register Type: Special

Nonvolatile Restore: RFast (015h) if nNVCfg1.enRF is set

Alternate Initial Value: RFast defaults 0x0148(80mΩ)

When enabled, the nRFast register is used to configure the initial values for the RFast register. If nNVCfg1.enRF is clear,

nRFast can be used for general purpose data storage. Table 57 shows the format.

Table 57. nRFast Register (1E5h) Format

D15	D14	D13	D12	D11	D10	D9	D8	D7	D6	D5	D4	D3	D2	D1	D0
nRFast															

nRFast: Restores to the RFast register using the following equation:

RFast = (nRFast AND 0xFF00) >> 4

The RFast register value is used by the ModelGauge m5 algorithm to compensate an initial open-circuit voltage starting point if the IC is powered up or reset while the cell stack is under load and not relaxed. RFast is a unit-less scalar with an LSb of (100 x R_{SENSE})/4096 . The initial value of 0x0148 gives a default RFast value of 80mΩ with a 10mΩ sense resistor.

nIChgTerm Register (19Ch)

Register Type: Current

Nonvolatile Restore: IChgTerm (01Eh) if nNVCfg0.enICT is set

Alternate Initial Value: 1/3rd the value of the nFullCapNom register (corresponds to C/9.6)

The nIChgTerm register allows the device to detect when a charge cycle of the cell has completed. nIChgTerm should be programmed to the exact charge termination current used in the application.The device detects end-of-charge if all the following conditions are met:

• VFSOC Register > FullSOCThr Register

• AND IChgTerm x 0.125 < Current Register < IChgTerm x 1.25

• AND IChgTerm x 0.125 < AvgCurrent Register < IChgTerm x 1.25

See the *End-of-Charge Detection* section for more details.

nRComp0 Register (1A6h)

Register Type: Special

Nonvolatile Restore: RComp0 (038h)

The nRComp0 register holds characterization information critical to computing the open circuit voltage of a cell under loaded conditions.

nRComp0 on MAX1730x/MAX1731x is redimensioned and not directly compatible with values from previous ModelGauge m5 ICs (MAX17201-15, MAX17055, MAX17260-3). Please consult Analog Devices for translation of any prior characterizations.

nTempCo Register (1A7h)

Register Type: Special

Nonvolatile Restore: TempCo (039h)

The nTempCo register holds temperature compensation information for the nRComp0 register value.

ModelGauge m5 Algorithm Configuration Registers

The following registers allow operation of the ModelGauge m5 algorithm to be adjusted for the application. It is recommended that the default values for these registers be used.

nFilterCfg Register (19Dh)

Register Type: Special

Nonvolatile Restore: FilterCfg (029h) if nNVCfg0.enFCfg is set.

Alternate Initial Value: 0x0EA4

The nFilterCfg register sets the averaging time period for all A/D readings, for mixing OCV results, and coulomb count

results. It is recommended that these values are not changed unless absolutely required by the application. Table 58 shows the nFilterCfg register format.

Table 58. FilterCfg (029h)/nFilterCfg (19Dh) Register Format

D15	D14	D13	D12	D11	D10	D9	D8	D7	D6	D5	D4	D3	D2	D1	D0
0	0	TEMP			MIX				VOLT			CURR			

CURR: Sets the time constant for the AvgCurrent register. The default POR value of 0100b gives a time constant of 5.625s. The equation setting the period is:

AvgCurrent time constant = 45s x $2^{(CURR-7)}$

VOLT: Sets the time constant for the AvgVCell register. The default POR value of 010b gives a time constant of 45.0s. The equation setting the period is:

AvgVCell time constant = 45s x $2^{(VOLT-2)}$

MIX: Sets the time constant for the mixing algorithm. The default POR value of 1101b gives a time constant of 12.8 hours. The equation setting the period is:

Mixing Period = 45s x $2^{(MIX-3)}$

TEMP: Sets the time constant for the AvgTA register. The default POR value of 0001b gives a time constant of 1.5 minutes. The equation setting the period is:

AvgTA time constant = 45s x 2^{TEMP}

0: Write these bits to 0.

nRelaxCfg Register (1B6h)

Register Type: Special

Nonvolatile Restore: RelaxCfg (0A0h) if nNVCfg0.enRCfg is set.

Alternate Initial Value: 0x2039

The nRelaxCfg register defines how the IC detects if the cell is in a relaxed state. See Figure 25. For a cell to be considered relaxed, current flow through the cell must be kept at a minimum while the change in the cell's voltage over time, dV/dt, shows little or no change. If AvgCurrent remains below the LOAD threshold while VCell changes less than the dV threshold over two consecutive periods of dt, the cell is considered relaxed. Table 59 shows the nRelaxCfg register format.

Table 59. RelaxCfg (0A0h)/nRelaxCfg (1B6h) Register Format

D15	D14	D13	D12	D11	D10	D9	D8	D7	D6	D5	D4	D3	D2	D1	D0
LOAD							dV					dt			

LOAD: Sets the threshold, which the AvgCurrent register is compared against. The AvgCurrent register must remain below this threshold value for the cell to be considered unloaded. Load is an unsigned 7-bit value where 1 LSb = 50µV. The default value is 800µV.

dV: Sets the threshold, which VCell is compared against. If the cell's voltage changes by less than dV over two consecutive periods set by dt, the cell is considered relaxed; dV has a range of 0 to 40mV where 1 LSb = 1.25mV. The default value is 3.75mV.

dt: Sets the time period over which change in VCell is compared against dV. If the cell's voltage changes by less than dV over two consecutive periods set by dt, the cell is considered relaxed. The default value is 1.5 minutes. The comparison period is calculated as:

Relaxation period = $2^{(dt-8)}$ x 45s

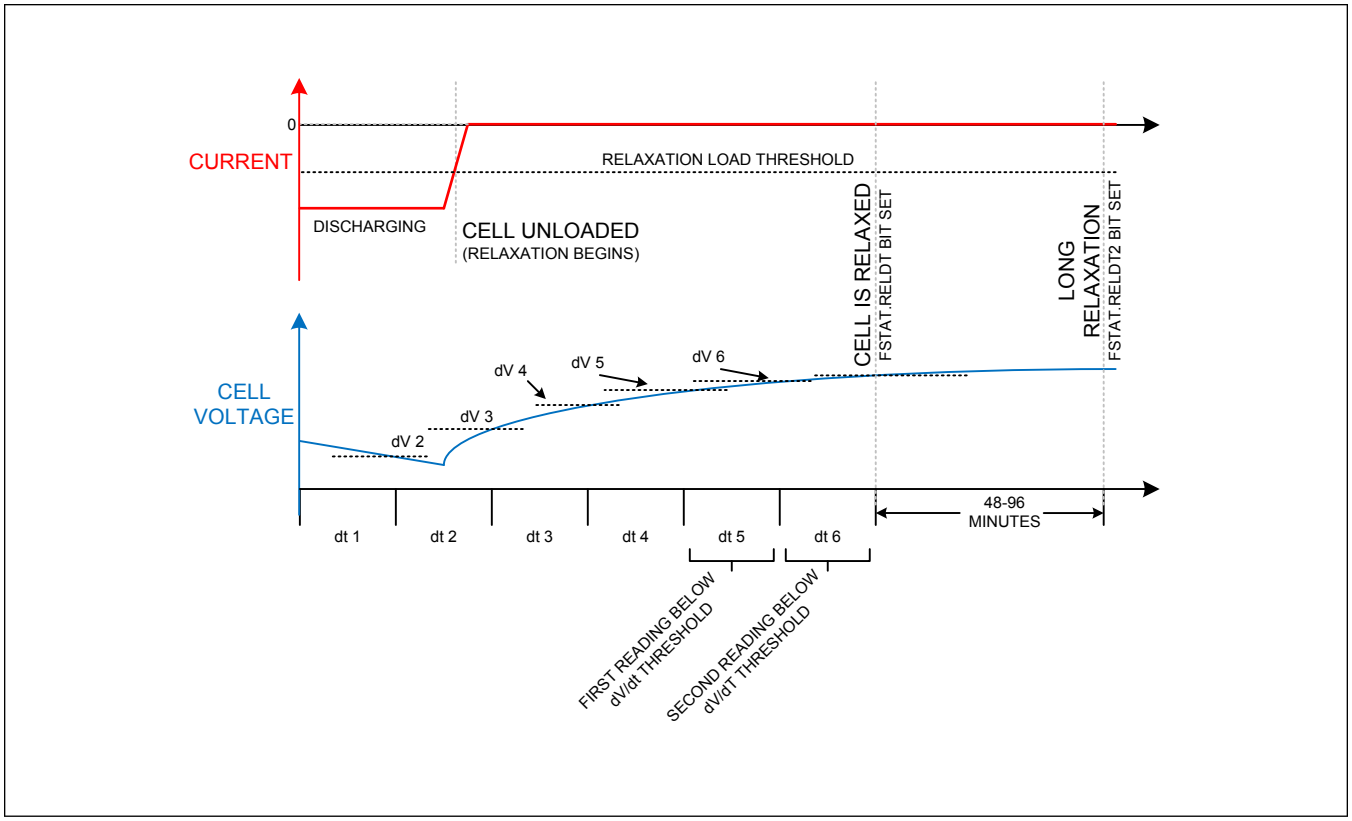

Figure 25. Cell Relaxation Detection

nTTFCfg Register (1C7h)/CV_MixCap (0B6h) and CV_HalfTime (0B7h) Registers

Register Type: Special

Nonvolatile Restore: There is no associated restore location for this register.

Alternate Initial Value: CV_HalfTime = 0xA00 (30 minutes) and CV_MixCap = 75% x FullCapNom.

The nTTFCfg register configures parameters related to the time-to-full (TTF) calculation. There is no associated RAM register location that this register is recalled into after device reset. These parameters can be tuned for best TTF performance during characterization by Analog Devices. Table 60 shows the register format.

Table 60. nTTFCfg Register (1C7h) Format

D15	D14	D13	D12	D11	D10	D9	D8	D7	D6	D5	D4	D3	D2	D1	D0
nCV_HalfTime								nCV_MixCapRatio							

nCV_HalfTime: Sets the HalfTime value with an LSb of 45 seconds giving a full scale range of 0 seconds to 192 minutes.

nCV_MixCapRatio: Sets the MixCapRatio with an LSb of 1/256 giving a full scale range of 0 to 0.9961.

nConvgCfg Register (1B7h)

Register Type: Special

Nonvolatile Restore: There is no associated restore location for this register.

The nConvgCfg register configures operation of the converge-to-empty feature. The recommended value for nConvgCfg is 0x2241. Table 61 shows the nConvgCfg register format. The nNVCfg1.CTE bit must be set to enable converge-to-empty functionality. If nNVCfg1.CTE is clear this register can be used as general purpose data storage.

Table 61. nConvgCfg Register (1B7h) Format

D15	D14	D13	D12	D11	D10	D9	D8	D7	D6	D5	D4	D3	D2	D1	D0
RepLow				VoltLowOff					MinSlopeX				RepL_per_stage		

RepL_per_stage: Adjusts the RepLow threshold setting depending on the present learn stage using the following equation. This allows the RepLow threshold to be at higher levels for earlier learn states. RepL_per_stage has an LSb of 1% giving a range of 0% to 7%.

RepLow Threshold = RepLow Field Setting + RemainingStages x RepL_per_stage

MinSlopeX: Sets the amount of slope-shallowing which occurs when RepSOC falls below RepLow. MinSlopeX LSb corresponds to a ratio of 1/16 giving a full range of 0 to 15/16.

VoltLowOff: When the AvgVCell register value drops below the VoltLow threshold, RepCap begins to bend downwards by a ratio defined by the following equation. VoltLowOff has an LSb of 20mV giving a range of 0 to 620mV.

(AvgVCell - VEmpty)/VoltLowOff

RepLow: Sets the threshold below which RepCap begins to bend upwards. The RepLow field LSb is 2% giving a full scale range from 0% to 30%.

nRippleCfg Register (1B1h)

Register Type: Special

Nonvolatile Restore: There is no associated restore location for this register.

The nRippleCfg register configures ripple measurement and ripple compensation. The recommended value for this register is 0x0204. Table 62 shows the register format.

Table 62. nRippleCfg Register (1B1h) Format

D15	D14	D13	D12	D11	D10	D9	D8	D7	D6	D5	D4	D3	D2	D1	D0
kDV													NR		

NR: Sets the filter magnitude for ripple observation as defined by the following equation giving a range of 1.4 seconds to 180 seconds.

Ripple Time Range = 1.4 seconds x 2^{NR}

kDV: Sets the corresponding amount of capacity to compensate proportional to the ripple.

ModelGauge m5 Algorithm Additional Registers

The following registers contain intermediate ModelGauge m5 data which may be useful for debugging or performance analysis. The values in these registers become value 480ms after the IC is reset.

Timer Register (03Eh)

Register Type: Special

Nonvolatile Backup: None

Initial Value: 0x0000

This register holds timing information for the fuel gauge. It is available to the user for debug purposes. The Timer register LSb is equal to 175.8ms giving a full scale range of 0 to 3.2 hours.

dQAcc Register (045h)

Register Type: Capacity (2mAh/LSB)

Nonvolatile Backup: Translated from nFullCapNom

Alternate Initial Value: 0x0017 (368mAh)

This register tracks change in battery charge between relaxation points. It is available to the user for debug purposes.

dPAcc Register (046h)

Register Type: Percentage (1/16% per LSB)

Nonvolatile Backup: None

Initial Value: 0x0190 (25%)

This register tracks change in battery state-of-charge between relaxation points. It is available to the user for debug purposes.

QResidual Register (00Ch)

Register Type: Capacity

Nonvolatile Backup: None

The QResidual register displays the calculated amount of charge in mAh that is presently inside of, but cannot be removed from the cell under present application conditions. This value is subtracted from the MixCap value to determine capacity available to the user under present conditions (AvCap).

VFSOC Register (0FFh)

Register Type: Percentage

Nonvolatile Backup: None

The VFSOC register holds the calculated present state-of-charge of the battery according to the voltage fuel gauge.

VFOCV Register (0FBh)

Register Type: Voltage

Nonvolatile Backup: None

The VFOCV register contains the calculated open-circuit voltage of the cell as determined by the voltage fuel gauge. This value is used in other internal calculations.

QH Register (4Dh)

Register Type: Capacity

Nonvolatile Backup: None

Alternate Initial Value: 0x0000

The QH register displays the raw coulomb count generated by the device. This register is used internally as an input to the mixing algorithm. Monitoring changes in QH over time can be useful for debugging device operation.

AvCap Register (01Fh)

Register Type: Capacity

Nonvolatile Backup: None

The AvCap register holds the calculated available capacity of the cell pack based on all inputs from the ModelGauge m5 algorithm including empty compensation. The register value is an unfiltered calculation. Jumps in the reported value can be caused by changes in the application such as abrupt changes in load current or temperature. See the *Fuel-Gauge Empty Compensation* section for details.

AvSOC Register (00Eh)

Register Type: Percentage

Nonvolatile Backup: None

The AvSOC register holds the calculated available state of charge of the cell based on all inputs from the ModelGauge m5 algorithm including empty compensation. The AvSOC percentage corresponds with AvCap and FullCapNom. The AvSOC register value is an unfiltered calculation. Jumps in the reported value can be caused by changes in the application such as abrupt changes in load current or temperature. See the *Fuel-Gauge Empty Compensation* section for details.

MixSOC Register (00Dh)

Register Type: Percentage

Nonvolatile Backup: None

The MixSOC register holds the calculated present state-of-charge of the cell before any empty compensation adjustments are performed. MixSOC corresponds with MixCap and FullCapNom. See the *Fuel-Gauge Empty Compensation* section for details.

MixCap Register (02Bh)

Register Type: Capacity

Nonvolatile Backup: None

The MixCap register holds the calculated remaining capacity of the cell before any empty compensation adjustments are performed. See the *Fuel-Gauge Empty Compensation* section for details.

VFRemCap Register (04Ah)

Register Type: Capacity

Nonvolatile Backup: None

The VFRemCap register holds the remaining capacity of the cell as determined by the voltage fuel gauge before any empty compensation adjustments are performed. See the *Fuel-Gauge Empty Compensation* section for details.

FStat Register (03Dh)

Register Type: Special

Nonvolatile Backup: None

The FStat register is a read-only register that monitors the status of the ModelGauge algorithm. Do not write to this register location. Table 63 is the FStat register format.

Table 63. FStat Register (03Dh) Format

D15	D14	D13	D12	D11	D10	D9	D8	D7	D6	D5	D4	D3	D2	D1	D0
X	X	X	X	X	X	RelDt	EDet	FQ	RelDt2	X	X	X	X	X	DNR

DNR: Data Not Ready. This bit is set to 1 at cell insertion and remains set until the output registers have been updated. Afterwards, the IC clears this bit indicating the fuel gauge calculations are now up to date. This takes between 445ms and 1.845s depending on whether the IC was in a powered state prior to the cell-insertion event.

RelDt2: Long Relaxation. This bit is set to 1 whenever the ModelGauge m5 algorithm detects that the cell has been relaxed for a period of 48 to 96 minutes or longer. This bit is cleared to 0 whenever the cell is no longer in a relaxed state. See Figure 29.

FQ: Full Qualified. This bit is set when all charge termination conditions have been met. See the End-of-Charge Detection section for details.

EDet: Empty Detection. This bit is set to 1 when the IC detects that the cell empty point has been reached. This bit is reset to 0 when the cell voltage rises above the recovery threshold. See the VEmpty register for details.

RelDt: Relaxed cell detection. This bit is set to a 1 whenever the ModelGauge m5 algorithm detects that the cell is in a fully relaxed state. This bit is cleared to 0 whenever a current greater than the load threshold is detected. See Figure 29.

X: Don't Care. This bit is undefined and can be logic 0 or 1.

FOTPStat Register (0BBh)

Register Type: Special

Non-Volatile Backup: None

The FOTPStat register shown in Table 64 is reserved for internal operation. It allocates 4 bits for use by the PatchID.

Table 64. FOTPStat Register (0BBh) Format

D15	D14	D13	D12	D11	D10	D9	D8	D7	D6	D5	D4	D3	D2	D1	D0
PatchID				X	X	X	X	X	X	X	X	X	X	X	X

PatchID: PatchID. The upper 4 bits can be used to identify the PatchID version that the IC is using.

Memory

The memory space of the MAX1730x/MAX1731x is divided into 32 pages each containing 16 registers where each register is 16-bits wide. Registers are addressed using an internal 9-bit range of 000h to 1FFh. Externally, registers are accessed with an 8-bit address for 2-wire communication or 16-bit address for 1-wire communication. Registers are grouped by functional block. See the functional descriptions for details of each register's functionality. Certain memory blocks can be permanently locked to prevent accidental overwrite. See the *Locking Memory Blocks* section for details. Table 65 shows the full memory map of the IC. Note that some individual user registers are located on RESERVED memory pages. These locations can be accessed normally while the remainder of the page is considered RESERVED. Memory locations listed as RESERVED should never be written to. Data read from RESERVED locations is not defined.

Table 65. Top Level Memory Map

REGISTER PAGE	LOCK	DESCRIPTION	MAX1730x			MAX1731x
			2-WIRE SLAVE ADDRESS	2-WIRE PROTOCOL	2-WIRE EXTERNAL ADDRESS RANGE	1-WIRE EXTERNAL ADDRESS RANGE
00h		MODELGAUGE m5 DATA BLOCK	6Ch	I²C	00h-4Fh	0000h-004Fh
01h-04h	LOCK2					
05h-0Ah		RESERVED				
0Bh	LOCK2	MODELGAUGE m5 DATA BLOCK (continued)	6Ch	I²C	B0h-BFh	00B0h-00BFh
0Ch	SHA	SHA MEMORY	6Ch	I²C	C0h-CFh	00C0h-00CFh
0Dh	LOCK2	MODELGAUGE m5 DATA BLOCK (continued)	6Ch	I²C	D0h-DFh	00D0h-00DFh
0Eh-0Fh		RESERVED				
10h-17h		SBS DATA BLOCK	16h	SBS	00h-7Fh	
18h-19h	LOCK3	MODELGAUGE m5 NONVOLATILE MEMORY BLOCK	16h	I²C	80h-EFh	0180h-01EFh
1Ah-1Bh	LOCK1	LIFE LOGGING and CONFIGURATION NONVOLATILE MEMORY BLOCK				
1Ch	LOCK4	CONFIGURATION NONVOLATILE MEMORY BLOCK				

Table 65. Top Level Memory Map (continued)

1Dh	LOCK5	PROTECTION NONVOLATILE MEMORY BLOCK				
1Eh	LOCK1	USER and SBS NONVOLATILE MEMORY BLOCK				
1Fh		NONVOLATILE HISTORY	16h	I^2C	F0h-FFh	01F0h-01FFh

Table 66. Individual Registers

REGISTER ADDRESS	LOCK	DESCRIPTION	MAX1730x			MAX1731x
			2-WIRE SLAVE ADDRESS	2-WIRE PROTOCOL	2-WIRE EXTERNAL ADDRESS RANGE	1-WIRE EXTERNAL ADDRESS RANGE
060h		Command REGISTER	6Ch	I^2C	60h	0060h
061h		CommStat REGISTER	6Ch	I^2C	61h	0061h
07Fh		Lock REGISTER	6Ch	I^2C	7Fh	007Fh

ModelGauge m5 Memory Space

Registers that relate to functionality of the ModelGauge m5 fuel gauge are located on pages 00h-04h and are continued on pages 0Bh and 0Dh. See the *ModelGauge m5 Algorithm* section for details of specific register operation. These locations (other than page 00h) can be permanently locked by setting LOCK2. Register locations shown in gray are reserved locations and should not be written to. See Table 67.

Table 67. ModelGauge m5 Register Memory Map

PAGE/ WORD	00xH	01xH	02xH	03xH	04xH	0AxH	0BxH	0DxH
0h	Status	FullCapRep	TTF	Reserved	AvgDieTemp	RelaxCfg	Status2	SOCHold
1h	VAlrtTh	TTE	DevName	Reserved	Reserved	LearnCfg	Power	Reserved
2h	TAlrtTh	QRTable00/ VCellRep	QRTable10/ CurrRep	QRTable20	QRTable30	Reserved	VRipple	Reserved
3h	SAlrtTh	FullSocThr	FullCapNom	Reserved	Reserved	Reserved	AvgPower	Reserved
4h	AtRate	RCell	Reserved	DieTemp	Reserved	MaxPeakPower	Reserved	AvgCell1
5h	RepCap	RFast	Reserved	FullCap	dQAcc	SusPeakPower	TTFCfg	Reserved
6h	RepSOC	AvgTA	Reserved	IAvgEmpty	dPAcc	PackResistance	CVMixCap	nVPrtTh1Bak
7h	Age	Cycles	AIN0	Reserved	Reserved	SysResistance	CVHalfTime	Batt
8h	MaxMinVolt	DesignCap	Charging Current	Reserved	Reserved	MinSysVoltage	CGTempCo	Cell1
9h	MaxMinTemp	AvgVCell	FilterCfg	FStat2	ProtTmrStat	MPPCurrent	AgeForecast	ProtStatus
Ah	MaxMinCurr	VCell	Charging Voltage	VEmpty	VFRemCap	SPPCurrent	Reserved	Reserved
Bh	Config	Temp	MixCap	Reserved	Reserved	Config2	FStat3	ModelCfg
Ch	QResidual	Current	Reserved	Reserved	Reserved	IAlrtTh	Reserved	AtQResidual
Dh	MixSOC	AvgCurrent	Reserved	FStat	QH	MinVolt	Reserved	AtTTE
Eh	AvSOC	IChgTerm	Reserved	Timer	Reserved	MinCurr	TimerH	AtAvSOC
Fh	MiscCfg	AvCap	Reserved	ShdnTimer	Reserved	Reserved	Reserved	AtAvCap

Nonvolatile Memory

Nonvolatile Memory Map

Certain ModelGauge m5 and device configuration values are stored in nonvolatile memory to prevent data loss if the IC loses power. The MAX1730x/MAX1731x internally updates page 1Ah values over time based on actual performance of the ModelGauge m5 algorithm. The host system does not need to access this memory space during operation. Nonvolatile data from other accessible register locations is internally mirrored into the nonvolatile memory block automatically. Note that non-volatile memory has a limited number of writes. **User accessible configuration memory is limited to 7 writes. Internal and external updates to page 1Ah as the fuel gauge algorithm learns are limited to 100 writes. Do not exceed these write limits.** Table 68 shows the nonvolatile memory register map.

Table 68. Nonvolatile Register Memory Map (Slave address 0x16)

PAGE/ WORD	18xH	19xH	1AxH[1]	1BxH	1CxH	1DxH	1ExH
0h	nXTable0	nOCVTable0	nQRTable00	nConfig	nPReserved0	nVPrtTh1	nDPLimit
1h	nXTable1	nOCVTable1	nQRTable10	nRippleCfg	nPReserved1	nTPrtTh1	nScOcvLim
2h	nXTable2	nOCVTable2	nQRTable20	nMiscCfg	nPReserved2	nTPrtTh3	nAgeFcCfg
3h	nXTable3	nOCVTable3	nQRTable30	nDesignCap	nPReserved3	nIPrtTh1	nDesignVoltage
4h	nXTable4	nOCVTable4	nCycles	nSBSCfg	nRGain	nVPrtTh2	Reserved
5h	nXTable5	nOCVTable5	nFullCapNom	nPackCfg	nPackResistance	nTPrtTh2	nRFast
6h	nXTable6	nOCVTable6	nRComp0	nRelaxCfg	nFullSOCThr	nProtMiscTh	nManfctrDate
7h	nXTable7	nOCVTable7	nTempCo	nConvgCfg	nTTFCfg	nProtCfg	nFirstUsed
8h	nXTable8	nOCVTable8	nBattStatus	nNVCfg0	nCGain	nJEITAC	nSerialNumber0
9h	nXTable9	nOCVTable9	nFullCapRep	nNVCfg1	nTCurve/ nCGTempCo	nJEITAV	nSerialNumber1
Ah	nXTable10	nOCVTable10	nVoltTemp	nNVCfg2	nTGain	nJEITACfg	nSerialNumber2
Bh	nXTable11	nOCVTable11	nMaxMinCurr	nHibCfg	nTOff	nStepChg	nDeviceName0
Ch	nVAlrtTh	nIChgTerm	nMaxMinVolt	nROMID0[2]	nManfctrName0	nDelayCfg	nDeviceName1
Dh	nTAlrtTh	nFilterCfg	nMaxMinTemp	nROMID1[2]	nManfctrName1	nODSCTh	nDeviceName2
Eh	nIAlrtTh	nVEmpty	nFaultLog/ nFullCapFlt	nROMID2[2]	nManfctrName2	nODSCCfg	nDeviceName3
Fh	nSAlrtTh	nLearnCfg	nTimerH	nROMID3[2]	nRSense	nCheckSum	nDeviceName4

1. Locations 1A0h to 1AFh are updated automatically by the IC each time it learns.

2. The ROM ID is unique to each IC and cannot be changed by the user.

100 Record Life Logging

Addresses 0x1A0 to 0x1AF support 100 burn entries of learned battery characteristic and other life logging if LOCK1 is unlocked. The save interval is managed automatically using a Fibonacci algorithm which provides the following benefits:

1. **Lifespan autopsy/debug data** to support analysis of any aged or returned battery.
   a. **Battery Characteristic Learning/Adaptation.** FullCap (nFullCapRep, nFullCapNom), empty-compensation (nQRTable00-30), resistance (nRComp0 and nTempCo)
   b. **Permanent Failure Information** (nBattStatus)
   c. **Battery Charge/Discharge Fractional Cycle Counter** (nCycles)
   d. **23 year Timer** (nTimerH)
   e. **Log-Interval Max/Min Voltage/Current/Temperature** (nMaxMinCurr, nMaxMinVolt, nMaxMinTemp)
   f. **Voltage/Temperature** at logging moment (nVoltTemp)
2. **Intelligently managed save-intervals**:
   a. **Frequent When New**. When the battery is new the updates occur more frequently, since early information learned about the battery, such as full-capacity, is more critical for overall performance.
   b. **Slower With Age.** As the battery matures the update interval slows down, since changes in learned information also progresses slower.
   c. **Faster Updates Following Power-Loss**. This limits the loss of information associated with power-loss. Each time the power is lost and this learned information is restored, the rate of the next save is accelerated as shown in Table 71. This is limited to seven reset accelerations. The reset counter is also recorded (see also *nCycles* register). Most battery applications can proceed for longer than 1 year without interruption in power.
   d. **Limitation on Slowest Interval.** Beyond a certain cycle life, the update interval remains constant.

Configure this behavior according to your expected battery lifespan using the FibMax and FibScl parameters in *nNVCfg2* as follows:

Table 69. Fibonacci Configuration Settings

		FIBONACCI SCALAR—NNVCFG2.FIBSCL			
Setting		**00**	**01**	**10**	**11**
1st and 2nd Interval		0.25	0.5	1	2
Battery Cycles Record Limit	FibMax = 0	193	386	**772**	1544
	FibMax = 1	**310.5**	**621**	**1242**	2484
	FibMax = 2	**496.5**	**993**	**1986**	3972
	FibMax = 3	**795.5**	**1591**	3182	6364
	FibMax = 4	**1273.25**	2546.5	5093	10186
	FibMax = 5	2038.75	4077.5	8155	16310
	FibMax = 6	3262	6524	13048	26096
	FibMax = 7	5220	10440	20880	41760

The **bold** settings in Table 69 are the generally recommended choices, depending on preference for update interval, slowest update rates, and lifespan.

Table 70 shows the slowest update intervals associated with each configuration.

Table 70. Eventual Matured Update Interval (in battery cycles)

		FIBONACCI SCALAR—NNVCFG2.FIBSCL			
Setting		**00**	**01**	**10**	**11**
1st and 2nd Interval		0.25	0.5	1	2
Slowest Update Interval	FibMax = 0	2	4	**8**	16
	FibMax = 1	**3.25**	**6.5**	**13**	26
	FibMax = 2	**5.25**	**10.5**	**21**	42

Table 70. Eventual Matured Update Interval (in battery cycles) (continued)

	FibMax = 3	**8.5**	**17**	34	68
	FibMax = 4	**13.75**	27.5	55	110
	FibMax = 5	22.25	44.5	89	178
	FibMax = 6	36	72	144	288
	FibMax = 7	58.25	116.5	233	466

Table 71 illustrates the saving schedule with the most preferred configurations.

Table 71. Saving Schedule Example With the Most Preferred Configurations

EXAMPLE	CYCLE LIFE	FIB MAX	FIB SCL	SLOWEST UPDATE	1ST	2ND	3RD	4TH	5TH	6TH	7TH	8TH	9TH	10TH	11TH
1	**310.5**	1	0	3.25	0.25	0.25	0.5	0.75	1.25	2	3.25	3.25	3.25	—	—
2	**386**	0	1	4	0.5	0.5	1	1.5	2.5	4	4	4	—	—	—
3	**496.5**	2	0	5.25	0.25	0.25	0.5	0.75	1.25	2	3.25	5.25	5.25	5.25	—
4	**621**	1	1	6.5	0.5	0.5	1	1.5	2.5	4	6.5	6.5	6.5	—	—
5	**772**	0	2	8	1	1	2	3	5	8	8	8	—	—	—
6	**795.5**	3	0	8.5	0.25	0.25	0.5	0.75	1.25	2	3.25	5.25	8.5	8.5	—
7	**993**	2	1	10.5	0.5	0.5	1	1.5	2.5	4	6.5	10.5	10.5	10.5	—
8	**1242**	1	2	13	1	1	2	3	5	8	13	13	13	—	—
9	**1273.25**	4	0	13.75	0.25	0.25	0.5	0.75	1.25	2	3.25	5.25	8.5	13.75	13.75

As an example for all subsequent startups, for the configuration of example 9 from Table 71:

1st startup [0.25, 0.25, 0.5, 0.75, 1.25, 2, 3.25, 5.25, 8.5, 13.75, ...]

2nd startup [0.25, 0.5, 0.75, 1.25, 2, 3.25, 5.25, 8.5, 13.75, ...]

3rd startup [0.5, 0.75, 1.25, 2, 3.25, 5.25, 8.5, 13.75, ...]

4th startup [0.75, 1.25, 2, 3.25, 5.25, 8.5, 13.75, ...]

5th startup [1.25, 2, 3.25, 5.25, 8.5, 13.75, ...]

6th startup [2, 3.25, 5.25, 8.5, 13.75, ...]

7th startup [3.25, 5.25, 8.5, 13.75, ...]

8th startup [5.25, 8.5, 13.75, ...]

nNVCfg0 Register (1B8h)

Register Type: Special

Nonvolatile Restore: There is no associated restore location for this register.

The nNVCfg0 register manages nonvolatile memory backup of device and fuel gauge register RAM locations. Each bit of the nNVCfg0 register, when set, enables a given register location to be restored from a corresponding nonvolatile memory location after reset of the IC. If nonvolatile restore of a given register is not enabled, that location initializes to a default value after reset instead. See the individual register descriptions for details. The factory default value for nNVCfg0 register is 0x0702. Table 72 shows the nNVCfg0 register format.

Table 72. nNVCfg0 Register (1B8h) Format

D15	D14	D13	D12	D11	D10	D9	D8
enOCV	enX	enSHA	0	enCfg	enFCfg	enRCfg	enLCfg
D7	**D6**	**D5**	**D4**	**D3**	**D2**	**D1**	**D0**
enICT	enDP	enVE	enDC	enMC	enAF	—	enSBS

enSBS: Enable SBS. This bit enables SBS functions of the IC. When set, all registers accessed with the SBS 2-Wire

address is regularly updated. When this bit is clear, all SBS related nonvolatile configuration register locations can be used as general purpose user memory.

enAF: Enable Age Forecasting. Set this bit to enable Age Forecasting functionality. When this bit is clear, nAgeFcCfg can be used for general purpose data storage. When set, nVoltTemp becomes repurposed for Age Forecasting data. When enAF is set to 1, nNVCfg2.enVT must be 0 for proper operation.

enMC: Enable MiscCfg restore. Set this bit to enable MiscCfg register to be restored after reset by the nMiscCfg register. When this bit is clear, MiscCfg restores with its alternate initialization value and nMiscCfg can be used for general purpose data storage.

enDC: Enable DesignCap restore. Set this bit to enable DesignCap register to be restored after reset by the nDesignCap register. When this bit is clear, DesignCap restores with its alternate initialization value and nDesignCap can be used for general purpose data storage.

enVE: Enable VEmpty restore. Set this bit to enable VEmpty register to be restored after reset by the nVEmpty register. When this bit is clear, VEmpty restores with its alternate initialization value and nVEmpty can be used for general purpose data storage.

enDP: Enable Dynamic Power. Set this bit to enable Dynamic Power calculations. When this bit is set to 0, Dynamic Power calculations are disabled and registers MaxPeakPower/SusPeakPower/MPPCurrent/SPPCurrent can be used as general purpose memory. If enDP is set, enVE also needs to be set, and nVEmpty value needs to be valid.

enICT: Enable IChgTerm restore. Set this bit to enable IChgTerm register to be restored after reset by the nIChgTerm register. When this bit is clear, IChgTerm restores to a value of 1/3rd of the nFullCapNom register and nIChgTerm can be used for general purpose data storage.

enFCfg: Enable FilterCfg restore. Set this bit to enable FilterCfg register to be restored after reset by the nFilterCfg register. When this bit is clear, FilterCfg restores with its alternate initialization value and nFilterCfg can be used for general purpose data storage

enCfg: Enable Config and Config2 restore. Set this bit to enable Config and Config2 registers to be restored after reset by the nConfig register. When this bit is clear, Config and Config2 restores with their alternate initialization values and nConfig can be used for general purpose data storage.

enX: Enable XTable restore. Set this bit to enable nXTable register locations to be used for cell characterization data. When this bit is clear, the IC uses the default cell model and all nXTable register locations can be used as general purpose user memory.

enOCV: Enable OCVTable restore. Set this bit to enable nOCVTable register locations to be used for cell characterization data. When this bit is clear, the IC uses the default cell model and all nOCVTable register locations can be used as general purpose user memory.

enLCfg: Enable LearnCfg restore. Set this bit to enable LearnCfg register to be restored after reset by the nLearnCfg register. When this bit is clear, LearnCfg restores with its alternate initialization value and nLearnCfg can be used for general purpose data storage.

enRCfg: Enable RelaxCfg restore. Set this bit to enable RelaxCfg register to be restored after reset by the nRelaxCfg register. When this bit is clear, RelaxCfg restores with its alternate initialization value and nRelaxCfg can be used for general purpose data storage.

enSHA: Set to 1 to configure the MTP at address 0x1DC to 0x1DF as SHA space. Set to 0 to configure address 0x1DC to 0x1DF as user MTP.

0: Set to 0. Do not set to 1.

nNVCfg1 Register (1B9h)

Register Type: Special

Nonvolatile Restore: There is no associated restore location for this register.

The nNVCfg1 register manages nonvolatile memory restore of device and fuel gauge register RAM locations. Each bit of the nNVCfg1 register, when set, enables a given register location to be restored from a corresponding nonvolatile memory location after reset of the IC. If nonvolatile backup of a given register is not enabled, that location initializes to a default value after reset instead. See the individual register descriptions for details. Table 73 shows the nNVCfg1 register

format.

Table 73. nNVCfg1 Register (1B9h) Format

D15	D14	D13	D12	D11	D10	D9	D8
enTherm	enMtl	enFTh	enRF	enODSC	enJP	enSC	enProt
D7	**D6**	**D5**	**D4**	**D3**	**D2**	**D1**	**D0**
enJ	enProtChksm	enTP	enTTF	enAT	enCrv	enCTE	enDS

enJ: Enable ChargingCurrent and ChargingVoltage. Set this bit to 1 to enable ChargingCurrent and ChargingVoltage update feature.

enJP: Enable Protection with JIETA (temperature region dependent). Set this bit to 1 to enable JIETA Protection. Clear this bit to disable JEITA protection and make OVP and OCCP thresholds become flat.

enSC: Enable Special Chemistry Model. Set this bit to 1 if a special chemistry model is used. This bit enables the use of nScOcvLim.

enCTE: Enable Converge-to-Empty. Set this bit to enable the nConvgCfg register settings to affect the converge-to-empty functionality of the IC. When this bit is clear, converge-to-empty is disabled and nConvgCfg can be used for general purpose data storage.

enCrv: Enable Curve Correction. Set this bit to enable curvature correction on thermistor readings, improving thermistor translation performance to -40°C to +80°C (instead of -10°C to +50°C). Note that enCrv and enMtl are mutually exclusive functions. Do not set both enCrv and enMtl at the same time.

enAT: Enable Alert Thresholds. Set this bit to enable IAlrtTh, VAlrtTh, TAlrtTh, and SAlrtTh registers to be restored after reset by the nIAlrtTh, nVAlrtTh, nTAlrtTh, and nSAlrtTh registers respectively. When this bit is clear, these registers restore with their alternate initialization values and the nonvolatile locations can be used for general purpose data storage.

enTTF: Enable Time-to-Full Configuration. Set to 1 to enable nTTFCfg (configures CVMixCap and CVHalftime) for tuning of Time-to-Full performance. Otherwise, CVMixCap and CVHalftime restore to their alternate initialization values and nTTFCfg can be used for general purpose data storage.

enODSC: Enable OD and SC Overcurrent Comparators. Set this bit to enable ODSCTh and ODSCCfg registers to be restored after reset by the nODSCTh and nODSCCfg registers. When this bit is clear, ODSCTh and ODSCCfg restore with their alternate initialization values (comparators disabled) and nODSCTh and nODSCCfg can be used for general purpose data storage.

enRF: Enable RFast. Set this bit to enable RFast register to be restored after reset by the nRFast register. When this bit is clear, RFast restores with their alternate initialization values and nRFast can be used for general purpose data storage.

enFTh: Enable FullSOCThr Configuration Restore. Set this bit to enable FullSOCThr register to be restored after reset by the nFullSOCThr register. When this bit is clear, FullSOCThr restores with its alternate initialization value and nFullSOCThr can be used for general purpose data storage.

enMtl: Enable CGTempCo Restore. Set this bit to enable CGTempCo register to be restored after reset by the nTCurve register. When this bit is clear, CGTempCo restores with its alternate initialization value. nTCurve can be used for general purpose data storage if both enCrv and enMtl are clear. Do not set both enCrv and enMtl at the same time.

enTP: Set to 1 to associate the TaskPeriod register with nTaskPeriod MTP. Otherwise, TaskPeriod restores with the POR value and the register's address configures nRippleCfg instead of nTaskPeriod.

enDS: Set to 0. Don't set to 1.

enProt: Enable Protector. Set this bit to enable the protector. When this bit is clear, protector is disabled.

enProtChksm: Enable Protector Checksum Function. Set this bit to enable the protector checksum function. When this bit is clear, the checksum protection is disabled.

enTherm: Enable New Thermistor Calculations. (MAX17300/MAX17310 only). Set this bit to 1 to enable the new thermistor calculations which can achieve thermistor accuracy within ±0.5ºC from -40ºC to +85ºC. When this bit is clear, the original thermistor method is used for thermistor accuracy within ±3ºC from -20ºC to +70ºC.

0: This location must remain 0. Do not write this location to 1.

nNVCfg2 Register (1BAh)

Register Type: Special

Nonvolatile Restore: There is no associated restore location for this register.

The nNVCfg2 register manages nonvolatile memory backup and restore of device and fuel gauge register RAM locations. Each bit of the nNVCfg2 register, when set, enables a given register location to be restored from or backed up to a corresponding nonvolatile memory location after reset of the IC. If nonvolatile backup of a given register is not enabled, that location initializes to a default value after reset instead. See the individual register descriptions for details. Table 74 shows the nNVCfg2 register format.

Table 74. nNVCfg2 Register (1BAh) Format

D15	D14	D13	D12	D11	D10	D9	D8	D7	D6	D5	D4	D3	D2	D1	D0
enT	0	enMMT	enMMV	enMMC	enVT	enFC		enMet		enFL	FibMax			FibScl	

FibMax/FibScl. Set the FibMax and FibScl "Fibonacci Saving" interval to provide recurring log-saving according to the expected battery lifespan. See the *100 Record Life Logging* section for more details.

enMet: Enable metal current sensing. Setting this bit to 1 enables temperature compensation of current readings for allowing copper trace current sensing. This also forces the PackCfg.TdEn bit to 1 after reset of the IC to guarantee internal temperature measurements occurs. See nNVCfg1.enMtl, which enables nTCurve register operation for adjustment of the current sensing temperature coefficient.

enFL: Enable Fault Logging. At each Life Logging event, any protection faults that have occurred during that life segment are recorded into the nFaultLog Register (0x1AE).

enFC: Enable FullCap and FullCapRep backup and restore. Set this bit to enable FullCap and FullCapRep registers to be restored after reset by the nFullCapRep register and FullCapRep to backup to nFullCapRep. When this bit is clear, FullCap and FullCapRep registers restore from the nFullCapNom register. nFullCapRep can then be used as general purpose user memory.

enVT: Enable Voltage and Temperature backup. Set this bit to enable storage of AvgVCell and AvgTA register information into the nVoltTemp register during save operations. There is no corresponding restore option. When this bit and nNVCfg0.enAF are clear, nVoltTemp can be used as general purpose memory. Note that enVT should not be set simultaneously with nNVCfg0.enAF (AgeForecasting).

enMMC: Enable MinMaxCurr Backup. Set this bit to enable storage of MinMaxCurr register information into the nMinMaxCurr register during save operations. There is no corresponding restore option. When this bit is clear, nMinMaxCurr can be used as general purpose memory.

enMMV: Enable MinMaxVolt Backup. Set this bit to enable storage of MinMaxVolt register information into the nMinMaxVolt register during save operations. There is no corresponding restore option. When this bit is clear, nMinMaxVolt can be used as general purpose memory.

enMMT: Enable MinMaxTemp Backup. Set this bit to enable storage of MinMaxTemp register information into the nMinMaxTemp register during save operations. There is no corresponding restore option. When this bit is clear, nMinMaxTemp can be used as general purpose memory.

enT: Enable TimerH backup and restore. Set this bit to enable TimerH register to be backed up and restored by the nTimerH register. When this bit is clear, TimerH restores with its alternate initialization value and nTimerH can be used as general purpose memory.

Enabling and Freeing Nonvolatile vs. Defaults

There are seven nonvolatile memory words labeled nUser that are dedicated to general purpose user data storage. Most other nonvolatile memory locations can also be used as general purpose storage if their normal function is disabled. The nNVCfg0, nNVCfg1, and nNVCfg2 registers control which nonvolatile memory functions are enabled and disabled. Table 75 shows how to free up the specific registers for user data storage. Table 76 shows which nNVCfg bits control different IC functions and the effects when the bit is set or cleared. See the nNVCfg register descriptions for complete details. Do not convert a nonvolatile register to general purpose memory space if that register's function is used by the application.

Below is a summary of how many bytes can be made available for user memory and the functional trade off to free up those bytes.

- **156 bytes maximum freeable:** The cost is to sacrifice any optional features/configuration, including no custom OCV table and protector disabled.
- **74 bytes reasonably freeable:** Made available without reverting halfway to EZ or disabling protector.
- **62 bytes freeable:** Made available by using half of miscellaneous configurability.
- **42 bytes easily freeable**
- **34 bytes always free:** If SBS mode is not enabled.
- **4 bytes always free:** If SBS enabled is enabled.

Table 75. Making Nonvolatile Memory Available for User Data

	RELATED FEATURE	FREE BY:	BYTES	REGISTERS	ADDRESS	COMMENTS
MAJOR FEATURE CHOICES	Always Free	Always	1 word 2 bytes	"Reserved"	0x1E4	Not freeable on MAX17300/ MAX17310. Used as nMiscCfg2.
	SBS NVM	Disable SBS and DS2438 features nNVCfg0.enSBS = 0 nNVCfg1.enDS = 0	15 words 30 bytes	nSBSCfg nManfctrName[0:2] nDesignVoltage nManfctrDate nFirstUsed nSerialNumber[0:2] nDeviceName[0:4]	0x1B4, 0x1CC-0x1CE, 0x1E3, 0x1E8-0x1EF	Generally freeable.
	Time-to-Full Configurability	nNVCfg1.enTTF = 0	1 word 2 bytes	nTTFCfg	0x1C7	Free if default nTTFCfg is acceptable.
	Dynamic Power	nNVCfg0.enDP = 0	1 word 2 bytes	nDPLimit	0x1E0	Free if feature is not used.
	Age Forecasting	nNVCfg0.enAF = 0	1 word 2 bytes	nAgeFcCfg nFaultLog/ nFullCapFltr	0x1E2	Free if feature is not used. Has additional implications with nVoltTemp. nFaultLog/ nFullCapFltr is freeable if enAF = 0 AND enFL= 0.
	$LiFePO_4$	nNVCfg1.enSC	1 word 2 bytes	nScOcvLim	0x1E1	Free if feature is not used.
	JEITA Charge Voltage/ Current vs. Temp	nNVCfg0.enJ = 0 nNVCfg0.enJP = 0	2 words 4 bytes	nJEITAC nStepChg	0x1D8 0x1DB	Free if feature is not used. Note that nJEITAV and nJEITACfg are still required for protector functionality.
MODELLING/ CHARACTER-IZATION CONFIGURATION OPTIONS	Design Cap + FullCapRep	nNVCfg0.enDC = 0	1 word 2 bytes	nDesignCap (else nFullCapRep)	0x1B3	Freeable when original full-capacity isn't required to be remembered as FullCapRep ages.
	Relaxation Configuration	nNVCfg0.enRCfg = 0	6 words 12 bytes	nRelaxCfg	0x1B6	Normally freeable. Defaults work for most applications.
	Misc Configuration	nNVCfg0.enMC = 0		nMiscCfg	0x1B2	

Table 75. Making Nonvolatile Memory Available for User Data (continued)

	Converge-to-Empty Non-Default Configuration	nNVCfg1.enCTE		nConvgCfg	0x1B7	
	Full Detection % Threshold	nNVCfg1.enFTh		nFullSOCTh	0x1C6	
	RFast	nNVCfg1.enRFVSH		nRFast	0x1E5	
	Filter Configuration	nNVCfg0.enFC = 0		nFilterCfg	0x19D	
	nLearnCfg	nNVCfg0.en = 0	1 word 2 bytes	nLearnCfg	0x19F	Freeable depending on modelling/ characterization.
	Misc Configuration (Pushbutton, Comm-Shutdown, AtRate-enable	nNVCfg0.enCfg = 0	1 word 2 bytes	nConfig	0x1B0	Needed only for: Pushbutton feature, temp-alerts, 1% alerts, AtRate, comm-shutdown.
	Empty Voltage	nNVCfg0.enVE = 0	1 word 2 bytes	nVEmpty	0x19E	Free if targeting the fuel gauge to default 3.3V empty voltage.
	Charge Termination	nNVCfg0.enICT = 0	1 word 2 bytes	nIChgTerm	0x19C	With custom models/ characterization, this is not freeable.
	SOC Table	Use m5 EZ model by setting nNVCfg.enOCV = 0 nNVCfg.enX = 0	12 words 24 bytes	nXTable[0:11]	0x180-0x18B	
	OCV Table		12 words 24 bytes	nCVTable[0:11]	0x190-0x19B	
OTHER	Alert Startup Configuration	nNVCfg1.enAT = 0	4 words 8 bytes	nVAlrtTh nTAlrtTh nIAlrtTh nSAlrtTh	0x18C-0x18F	
	Fault Logging	nNVCfg2.enFL=0	1 word 2 bytes	nFaultLog/ nFullCapFltr*	0x1AE	*nFaultLog/ nFullCapFltr is freeable if enAF = 0 AND enFL=0.
	Protector NVM Checksum	nNVCfg1 .enProtChkSm = 0	1 word 2 bytes	nCheckSum	0x1DF	

Table 75. Making Nonvolatile Memory Available for User Data (continued)

	Protector	nNVCfg1.enProt = 0 nNVCfg1.enJP = 0	16 words 32 bytes	nVPrtTh1, nTPrtTh1 nTPrtTh3, nIPrtTh1 nVPrtTh2, nTPrtTh2 nProtMisTh nProtCfg, nJEITAV nJEITACfg, nDelayCfg nODSCTh, nODSCCfg nCheckSum (below if JEITA also off) nJEITAC, nStepChg	0x1D0-0x1DF	Most applications of MAX1730x/ MAX1731x use protector. However, if the protector is entirely disabled, these 32 bytes become free NVM. FET drivers and protection do not execute in this configuration.

Table 76. Nonvolatile Memory Configuration Options

ADDRESS	REGISTER NAME	FACTORY DEFAULT	CONTROL BIT(S)	FUNCTION WHEN CONTROL BIT IS SET	FUNCTION WHEN CONTROL BIT(S) CLEARED
180h - 18Bh	nXTable0 through nXTable12	All 0x0000	nNVCfg0.enX	180h-18Bh Hold Custom Cell Model Information	Becomes Free[1], IC Uses Default EZ Cell Model
18Ch	nVAlrtTh	0x0000	nNVCfg1.enAT	VAlrtTh, TAlrtTh, IAlrtTh, SAlrtTh initialize from nVAlrtTh, nTAlrtTh, nIAlrtTh, nSAlrtTh	Becomes Free[1], VAlrtTh, TAlrtTh, IAlrtTh, SAlrtTh → Disabled Threshold Values
18Dh	nTAlrtTh	0x0000			
18Eh	nIAlrtTh	0x0000			
18Fh	nSAlrtTh	0x0000			
190h - 19Bh	nOCVTable0 through nOCVTable12	All 0x0000	nNVCfg0.enOCV	190h-19Bh Hold Custom Cell Model Information	Becomes Free[1], IC Uses Default EZ Cell Model
19Ch	nIChgTerm	0x0000	nNVCfg0.enICT	nIChgTerm→ IChgTerm	Becomes Free[1], IChgTerm = FullCapRep/3
19Dh	nFilterCfg	0x0000	nNVCfg0.enFCfg	nFilterCfg→ FilterCfg	Becomes Free[1], FilterCfg = 0x0EA4
19Eh	nVEmpty	0x0000	nNVCfg0.enVE	nVEmpty→ VEmpty	Becomes Free[1], VEmpty = 0xA561
19Fh	nLearnCfg	0x0000	nNVCfg0.enLCfg	nLearnCfg → LearnCfg	Becomes Free[1], LearnCfg = 0x2687
1A0h	nQRTable00	0x1080	N/A	Always QRTable Information nQRTable00→ QRTable00 nQRTable10→ QRTable10 nQRTable20→ QRTable20 nQRTable30→ QRTable30	
1A1h	nQRTable10	0x2043			
1A2h	nQRTable20	0x078C			
1A3h	nQRTable30	0x0880			
1A4h	nCycles	0x0000		Always nCycles→ Cycles	
1A5h	nFullCapNom	0x0BB8		Always nFullCapNom→ FullCapNom	
1A6h	nRComp0	0x08CC		Always nRComp0→ RComp0	
1A7h	nTempCo	0x223E		Always nTempCo→ TempCo	
1A8h	nBattStatus	0x0000	nNVCfg1.enProt nProtCfg.PFen	Logs/Saves Permanent Failure Status	Becomes Free[1]
1A9h	nFullCapRep	0x1A90	nNVCfg2.enFC	nFullCapRep→ FullCapRep	Becomes Free[1] nFullCapNom→ FullCapRep
1AAh	nVoltTemp	0x0000	nNVCfg2.enVT (nNVCfg0.enAF = 0)	AvgVCell→ nVoltTemp and AvgTA→ nVoltTemp at each backup event	Becomes Free[1], Voltage, Temperature Logging Disabled
			nNVCfg0.enAF (nNVCfg2.enVT = 0)	nVoltTemp stores Age Forecasting Information	Becomes Free[1], Age Forecasting Disabled
1ABh	nMaxMinCurr	0x807F	nNVCfg2.enMMC	MaxMinCurr→ nMaxMinCurr at each backup event	Becomes Free[1]
1ACh	nMaxMinVolt	0x00FF	nNVCfg2.enMMV	MaxMinVolt→ nMaxMinVolt at each backup event	Becomes Free[1],
1ADh	nMaxMinTemp	0x807F	nNVCfg2.enMMT	MaxMinTemp→ nMaxMinTemp at each backup event	Becomes Free[1],

Table 76. Nonvolatile Memory Configuration Options (continued)

ADDRESS	REGISTER NAME	FACTORY DEFAULT	CONTROL BIT(S)	FUNCTION WHEN CONTROL BIT IS SET	FUNCTION WHEN CONTROL BIT(S) CLEARED
1AEh	nFaultLog/ nFullCapFlt	0x0000	nNVCfg2.enFL	nFaultLog stores the history of all protection events that happened in this save segment	Becomes Free[1], Age Forecasting Disabled
			nNVCfg0.enAF	nFullCapFlt stores Age Forecasting backup information	
1AFh	nTimerH	0x0000	nNVCfg2.enT	TimerH→ nTimerH at each backup event	Becomes Free[1],
1B0h	nConfig	0x0000	nNVCfg0.enCfg	nConfig→ Config nConfig→ Config2	Becomes Free[1], Config = 0x2214, Config2 = 0x2058
1B1h	nRippleCfg	0x0204	N/A	Always nRippleCfg→ RippleCfg	
1B2h	nMiscCfg	0x0000	nNVCfg0.enMC	nMiscCfg→ MiscCfg	Becomes Free[1], MiscCfg = 0x3870
1B3h	nDesignCap	0x0000	nNVCfg0.enDC	nDesignCap→ DesignCap	Become Free[1], FullCapRep→ DesignCap
1B4h	nSBSCfg	0x0000	nNVCfg0.enSBS	SBS Functions Enabled	Becomes Free[1]
1B5h	nPackCfg	0x1101	N/A	Always nPackCfg→ PackCfg	
1B6h	nRelaxCfg	0x0839	nNVCfg0.enRCfg	nRelaxCfg→ RelaxCfg	Becomes Free[1], RelaxCfg = 0x2039,
1B7h	nConvgCfg	0x2241	nNVCfg1.enCTE	Converge-to-Empty Enabled	Becomes Free[1], Converge-to-Empty Disabled
1B8h	nNVCfg0	0x0200	N/A	Always Required Nonvolatile Memory Control Registers	
1B9h	nNVCfg1	0x0986			
1BAh	nNVCfg2	0xFE0A			
1BBh	nHibCfg	0x0909	nHibCfg always applies, not optional		
1BCh	nROMID0	Varies	N/A	Always the Unique 64-bit ID	
1BDh	nROMID1	Varies			
1BEh	nROMID2	Varies			
1BFh	nROMID3	Varies			
1C0h	nPReserved0	0x8480 (0x0000[2])	N/A	**Do Not Modify** without Special Guidance from Analog Devices	
1C1h	nPReserved1	0x8780 (0x0000[2])			
1C2h	nPReserved2	0x0000 (0x0000[2])			
1C3h	nPReserved3	0xDE00 (0xA000[2])			
1C4h	nRGain	0x0000	nNVCfg0.enDP	Used for Dynamic Power	Becomes Free[1], Dynamic Power Disabled
1C5h	nPackResistance	0x0000			
1C6h	nFullSOCThr	0x0000	nNVCfg1.enFTh	nFullSOCThr→ FullSOCThr	Becomes Free[1], FullSOCThr = 0x5005

Table 76. Nonvolatile Memory Configuration Options (continued)

ADDRESS	REGISTER NAME	FACTORY DEFAULT	CONTROL BIT(S)	FUNCTION WHEN CONTROL BIT IS SET	FUNCTION WHEN CONTROL BIT(S) CLEARED
1C7h	nTTFCfg	0x0000	nNVCfg1.enTTF	nTTFCfg Configures Time-to-Full Calculation	Becomes Free[1], Time-to-Full Default Configuration
1C8h	nCGain	0x4000	N/A	Trim for Calibrating Current-Sense Gain	
1C9h	nCGTempCo/ nTCurve	0x0025	nNVCfg1.enMtl (nNVCfg2.enMet = 1) (nNVCfg1.enCrv = 0)	Metal Current Sense TempCo Configurable nTCurve→ CGTempCo	Becomes Free[1], Metal Current Sense TempCo Enabled, CGTempCo = 0x20C8
			nNVCfg1.enCrv (nNVCfg2.enMet = 0) *(default)*	Thermistor Curvature Controlled by nTCurve	Becomes Free[1], Thermistor Curvature Disabled
1CAh	nTGain	0xEE56	N/A	Configuration for Translating Thermistor to ºC	
1CBh	nTOff	0x1DA4			
1CCh	nManfctrName0	0x0000	nNVCfg0.enSBS	nManfctrName[2:0]→ sManfctrName	Becomes Free[1]
1CDh	nManfctrName1	0x0000			
1CEh	nManfctrName2	0x0000			
1CFh	nRSense	0x03E8	N/A	Sense Resistor Value—Helps Host Translate Currents and Capacities	
1D0h	nVPrtTh1	0x508C	nNVCfg1.enProt	Configures Protection Thresholds	Becomes Free[1] Protector Disabled
1D1h	nTPrtTh1	0x3700			
1D2h	nTPrtTh3	0x5528			
1D3h	nIPrtTh1	0x4BB5			
1D4h	nVPrtTh2	0xDC00			
1D5h	nTPrtTh2	0x2D0A			
1D6h	nProtMiscTh	0x7A28			
1D7h	nProtCfg	0x0A00			
1D8h	nJEITAC	0x644B			
1D9h	nJEITAV	0x0059			
1DAh	nJeitaCfg	0x5054			
1DBh	nStepChg	0xC884			
1DCh	nDelayCfg	0xAB3D			
1DDh	nODSCTh	0x0EAF			
1DEh	nODSCCfg	0x4345			
1DFh	nCheckSum	0x0017	nNVCfg1. {enProtChkSm and enProt}	Holds CheckSum Value of 1B0h-1BBh, 1C0h-1C3h, 1D0h-1DEh for Validating NVM at Startup	Becomes Free[1]
1E0h	nDPLimit	0x0000	nNVCfg0.enDP	Configures Dynamic Power	Becomes Free[1] Dynamic Power Disabled
1E1h	nScOcvLim	0x0000	nNVCfg1.enSC	Used for $LiFePO_4$ Gauging	Becomes Free[1] $LiFePO_4$ Disabled

Table 76. Nonvolatile Memory Configuration Options (continued)

ADDRESS	REGISTER NAME	FACTORY DEFAULT	CONTROL BIT(S)	FUNCTION WHEN CONTROL BIT IS SET	FUNCTION WHEN CONTROL BIT(S) CLEARED
1E2h	nAgeFcCfg	0x0000	nNVCfg0.enAF	Configures Age Forecast	Becomes Free[1]
1E3h	nDesignVoltage	0x0000	nNVCfg0.enSBS	nDesignVoltage→ sDesignVolt	Becomes Free[1]
1E4h	nMiscCfg2	0x0000	N/A	nMiscCfg2	
1E5h	nRFast	0x0000	nNVCfg1.enRF	nRFast→ RFast	Becomes Free[1], RFast = 0x0500
1E6h	nManfctrDate	0x0000	nNVCfg0.enSBS	nManfctrDate→ sManfctrDate	Becomes Free[1]
1E7h	nFirstUsed	0x0000		nFirstUsed→ sFirstUsed	Becomes Free[1]
1E8h	nSerialNumber0	0x0000		nSerialNumber[2:0]→ sSerialNumber	Becomes Free[1]
1E9h	nSerialNumber1	0x0000			
1EAh	nSerialNumber2	0x0000			
1EBh	nDeviceName0	0x0000		nDeviceName[4:0]→ sDeviceName	Becomes Free[1]
1ECh	nDeviceName1	0x0000			
1EDh	nDeviceName2	0x0000			
1EEh	nDeviceName3	0x0000			
1EFh	nDeviceName4	0x0000			

Note 1: "Free" indicates the address is unused and available as general user nonvolatile.

Note 2: MAX17300/MAX17310 only

Shadow RAM

Nonvolatile memory is never written to or read from directly by the communication interface. Instead, data is written to or read from shadow RAM memory located at the same address. Copy and recall commands are used to transfer data between the nonvolatile memory and the shadow RAM. Figure 26 describes this relationship. Nonvolatile memory recall occurs automatically at IC power-up and software POR.

Shadow RAM and Nonvolatile Memory Relationship

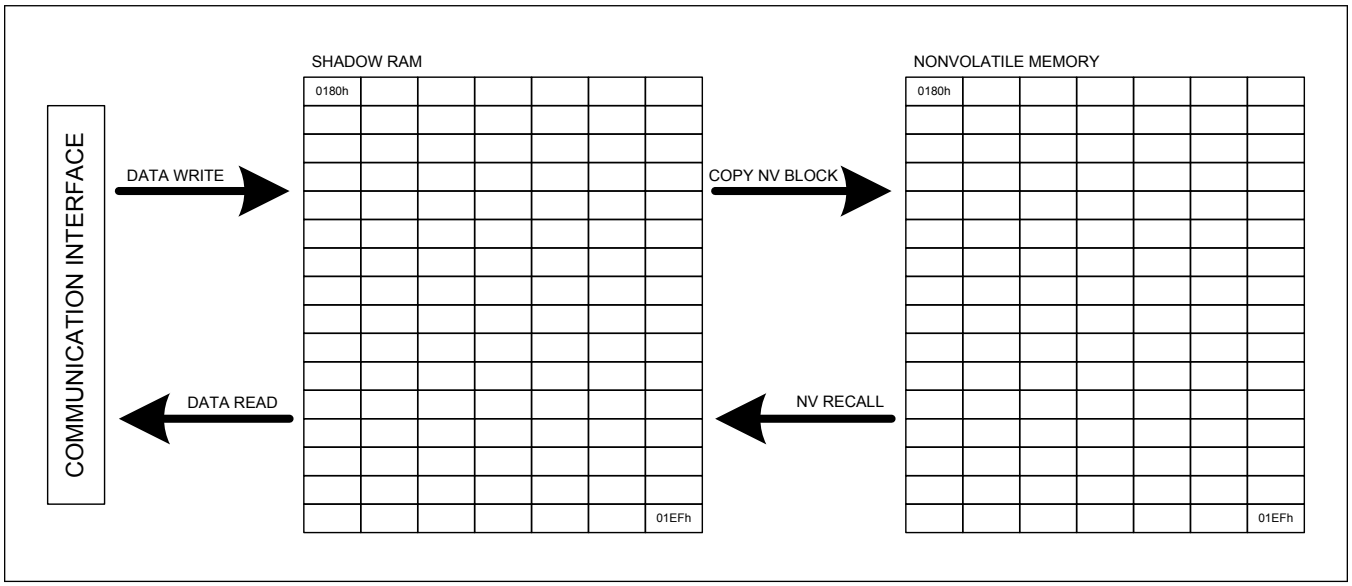

Figure 26. Shadow RAM and Nonvolatile Memory Relationship

Nonvolatile Memory Commands

The following commands are used to copy or recall data from the nonvolatile memory. All commands are written to the Command register at memory address 060h to perform the desired operation. The CommStat register can be used to track the status of the request.

COPY NV BLOCK [E904h]

This command copies the entire block from shadow RAM to nonvolatile memory addresses 180h to 1EFh excluding the unique ID locations of 1BCh to 1BFh. After issuing this command, the host must wait t_{BLOCK} for the operation to complete. The configuration memory can be copied a maximum of seven times. Note that the supply voltage must be above V_{NVM} for the operation to complete successfully.

NV RECALL [E001h]

This command recalls the entire block from nonvolatile memory to Shadow RAM addresses 180h to 1EFh. This is a low power operation that takes up to t_{RECALL} to complete. Note that the supply voltage must be above VNVM for the operation to complete successfully.

HISTORY RECALL [E2XXh]

This command copies history data into page 1Fh of memory. After issuing this command, the host must wait t_{RECALL} for the operation to complete before reading page 1Fh. Table 77 shows what history information can be recalled. See *SHA-256*, *Battery Life Logging*, and *Determining Number of Remaining Updates* sections for details on how to decode this information.

Table 77. History Recall Command Functions

COMMAND	FUNCTION
0xE29D	Recall indicator flags to determine remaining SHA-256 secret updates or clears
0xE29B	Recall indicator flags to determine remaining configuration memory writes
0xE29C	Recall indicator flags to determine remaining Battery Life Logging updates
0xE29C, 0xE29D	Recall indicator flags to determine Battery Life Logging update errors
0xE22E to 0xE291	Recall Battery Life Logging information

Nonvolatile Block Programming

The host must program all nonvolatile memory locations at the same time by using the Copy NV Block command. The host first writes all desired nonvolatile memory Shadow RAM locations to their desired values, then sends the Copy NV Block command, and then waits t_{BLOCK} for the copy to complete. Afterwards, the host should send the power-on-reset sequence to reset the IC and have the new nonvolatile settings take effect. The CommStat.NVError bit should be read to determine if the copy command executed successfully. Note that configuration memory is limited to n_{BLOCK} total write attempts. The recommended full sequence is:

1. Write desired memory locations to new values.
2. Clear CommStat.NVError bit.
3. Write 0xE904 to the Command register 0x060 to initiate a block copy.
4. Wait t_{BLOCK} for the copy to complete.
5. Check the CommStat.NVError bit. If set, repeat the process. If clear, continue.
6. Write 0x000F to the Command register 0x060 to POR the IC.
7. Wait 10ms for the IC to reset.
8. Write 0x8000 to Config2 register 0x0AB to reset firmware.
9. Wait for POR_CMD bit (bit 15) of the Config2 register to be cleared to indicated POR sequence is complete.

Determining Number of Remaining Updates

The configuration memory can only be updated seven times by the user (first update occurs during manufacturing test). The number of remaining updates can be calculated using the following procedure:

1. Write 0xE29B to the Command register (060h).
2. Wait t_{RECALL}.
3. Read memory address 1FDh.
4. Decode address 1FDh data as shown in Table 78. Each block write has redundant indicator flags for reliability. Logically OR the upper and lower bytes together then count the number of 1s determine how many updates have already been used. The first update occurs in manufacturing test prior to shipping to the user.

Table 78. Number of Remaining Config Memory Updates

ADDRESS 1FDH DATA	LOGICAL OR OF UPPER AND LOWER BYTES	NUMBER OF UPDATES USED	NUMBER OF UPDATES REMAINING
0000000x00000001b or 000000010000000xb	00000001b	1	7
000000xx0000001xb or 0000001x000000xxb	00000011b	2	6
00000xxx000001xxb or 000001xx00000xxxb	00000111b	3	5
0000xxxx00001xxxb or 00001xxx0000xxxxb	00001111b	4	4
000xxxxx0001xxxxb or 0001xxxx000xxxxxb	00011111b	5	3
00xxxxxx001xxxxxb or 001xxxxx00xxxxxxb	00111111b	6	2

Table 78. Number of Remaining Config Memory Updates (continued)

ADDRESS 1FDH DATA	LOGICAL OR OF UPPER AND LOWER BYTES	NUMBER OF UPDATES USED	NUMBER OF UPDATES REMAINING
0xxxxxxx01xxxxxxb or 01xxxxxx0xxxxxxxb	01111111b	7	1
xxxxxxxx1xxxxxxxb or 1xxxxxxxxxxxxxxxb	11111111b	8	0

nLearnCfg Register (19Fh)

Register Type: Special

Nonvolatile Restore: LearnCfg (0A1h) if nNVCfg0.enLCfg is set.

Alternate Initial Value: 0x4696

The nLearnCfg register controls all functions relating to adaptation during operation. Table 79 shows the register format.

Table 79. LearnCfg (0A1h)/nLearnCfg (19Fh) Register Format

D15	D14	D13	D12	D11	D10	D9	D8	D7	D6	D5	D4	D3	D2	D1	D0
0	1	0	0	0	1	1	0	1	LS			0	1	1	0

0: Bit must be written 0. Do not write 1.

1: Bit must be written 1. Do not write 0.

LS: Learn Stage. The Learn Stage value controls the influence of the voltage fuel gauge on the mixing algorithm. Learn Stage defaults to 0h, making the voltage fuel gauge dominate. Learn Stage then advances to 7h over the course of two full cell cycles to make the coulomb counter dominate. Host software can write the Learn Stage value to 7h to advance to the final stage at any time. Writing any value between 1h and 6h is ignored.

nMiscCfg Register (1B2h)

Register Type: Special

Nonvolatile Restore: MiscCfg (00Fh) if nNVCfg0.enMC is set.

Alternate Initial Value: 0x3070

The nMiscCfg control register enables various other functions of the device. The nMiscCfg register default values should not be changed unless specifically required by the application. Table 80 shows the register format.

Table 80. MiscCfg (00Fh)/nMiscCfg (1B2h) Register Format

D15	D14	D13	D12	D11	D10	D9	D8	D7	D6	D5	D4	D3	D2	D1	D0
FUS				0	0	MR					1	0	0	SACFG	

0: Bit must be written 0. Do not write 1.

1: Bit must be written 1. Do not write 0.

SACFG: SOC Alert Config. SOC Alerts can be generated by monitoring any of the SOC registers as follows. SACFG defaults to 00 at power-up:

0 0 SOC Alerts are generated based on the RepSOC register.

0 1 SOC Alerts are generated based on the AvSOC register.

1 0 SOC Alerts are generated based on the MixSOC register.

1 1 SOC Alerts are generated based on the VFSOC register.

MR: Mixing Rate. This value sets the strength of the servo mixing rate after the final mixing state has been reached (> 2.08 complete cycles). The units are MR0 = 6.25µV, giving a range up to 19.375mA with a standard 0.010Ω sense

resistor. Setting this value to 00000b disables servo mixing and the IC continues with time-constant mixing indefinitely. The default setting is 18.75µV or 1.875mA with a standard sense resistor.

FUS: Full Update Slope. This field prevents jumps in the RepSOC and FullCapRep registers by setting the rate of adjustment of FullCapRep near the end of a charge cycle. The update slope adjustment range is from 2% per 15 minutes (0000b) to a maximum of 32% per 15 minutes (1111b).

nConfig Register (1B0h)

Register Type: Special

Nonvolatile Restore: Config (00Bh) and Config2 (0ABh) if nNVCfg0.enCfg is set.

Alternate Initial Value: 0x2214 for Config, 0x0050 for Config2

The nConfig register holds all shutdown enable, alert enable, and temperature enable control bits. Writing a bit location enables the corresponding function within one task period. Table 81, Table 82, and Table 83 show the register formats.

Table 81. nConfig Register (1B0h) Format

D15	D14	D13	D12	D11	D10	D9	D8	D7	D6	D5	D4	D3	D2	D1	D0
ProtAlrtEn	SS	TS	VS	0	PBen	1	0	AtRateEn	COMMSH	FastADCen	1	FTHRM	Aen	dSOCen	TAlrtEn

Table 82. Config Register (00Bh) Format

D15	D14	D13	D12	D11	D10	D9	D8	D7	D6	D5	D4	D3	D2	D1	D0
0	SS	TS	VS	0	PBen	1	0	SHDN	COMMSH	FastADCen	1	FTHRM	Aen	Bei	ProtAlrtEn

Table 83. Config2 Register (0ABh) Format

D15	D14	D13	D12	D11	D10	D9	D8	D7	D6	D5	D4	D3	D2	D1	D0
POR_CMD	0	AtRtEn	0	POWR				dSOCen	TAlrtEn	0	1	DRCfg		CPMode	BlockDis

0: Bit must be written 0. Do not write 1.

1: Bit must be written 1. Do not write 0.

PBEn: PushButton enable. Set PBEn = 1 to enable wakeup by pushbutton. This application allows a gadget to be completely sealed with battery disconnected until a shared system button is pressed.

Bei: Enable alert on battery insertion when the IC is mounted host side. When Bei = 1, a battery-insertion condition, as detected by the TH pin voltage, triggers an alert.

Aen: Enable alert on fuel-gauge outputs. When Aen = 1, violation of any of the alert threshold register values by temperature, voltage, or SOC triggers an alert. This bit affects the ALRT1 pin operation only. The Smx, Smn, Tmx, Tmn, Vmx, Vmn, Imx, and Imn bits of the Status register (000h) are not disabled.

ProtAlrtEn: Enable alert on protection event. When ProtAlrtEn = 1 and Aen = 1, any protection event triggers an alert. This bit affects ALRT1 pin operation only. The Status.PA bit is not disabled. (MAX17300/10 Only)

FTHRM: Force Thermistor Bias Switch. This allows the host to control the bias of the thermistor switch or enable fast detection of battery removal. Set FTHRM = 1 to always enable the thermistor bias switch. With a standard 10kΩ thermistor, this adds an additional ~200µA to the current drain of the circuit.

FastADCen: Enable FastADC. Set to logic 1 to enable the FastADC feature. Do not write 1 unless guided by Analog Devices.

COMMSH: Communication Shutdown. Set to logic 1 to force the device to enter shutdown mode if both SDA and SCL are held low (MAX17300-MAX17303) or DQ is held low (MAX17310-MAX17313) for more than timeout of the ShdnTimer register. This also configures the device to wake up on a rising edge of any communication. Note that if COMMSH is set to 0, the device wakes up an edge of any of the DQ/SDA or OD/SCL pins. See Table 8.

SHDN: I^2C Shutdown Command. Write this bit to logic 1 to force a shutdown of the device after timeout of the ShdnTimer register (default 45s delay). SHDN is reset to 0 at power-up and upon exiting shutdown mode. In order to command shutdown within 45 seconds, first write HibCFG = 0x0000 to enter active mode.

VS: Voltage ALRT1 Sticky. When VS = 1, voltage alerts can only be cleared through software. When VS = 0, voltage

alerts are cleared automatically when the threshold is no longer exceeded.

TS: Temperature ALRT1 Sticky. When TS = 1, temperature alerts can only be cleared through software. When TS = 0, temperature alerts are cleared automatically when the threshold is no longer exceeded.

SS: SOC ALRT1 Sticky. When SS = 1, SOC alerts can only be cleared through software. When SS = 0, SOC alerts are cleared automatically when the threshold is no longer exceeded.

POR_CMD: Firmware Restart. Set this bit to 1 to restart IC firmware operation without performing a recall of nonvolatile memory into RAM. This allows different IC configurations to be tested without changing nonvolatile memory settings. This bit is set to 0 at power-up and automatically clears itself after firmware restart.

POWR: Sets the time constant for the AvgPower register. The default POR value of 0000b gives a time constant of 0.7s. The equation setting the period is:

AvgPower time constant = 45s x $2^{(POWR-6)}$

TAlrten: Temperature Alert Enable. Set this bit to 1 to enable temperature based alerts. Write this bit to 0 to disable temperature alerts. This bit is set to 1 at power-up.

dSOCen: SOC Change Alert Enable. Set this bit to 1 to enable the Status.dSOCi bit function. Write this bit to 0 to disable the Status.dSOCi bit. This bit is set to 0 at power-up.

CPMode: Constant-power mode. Set to 1 to enable constant-power mode.

DRCfg: Deep Relax Time Configuration. 00 for 0.8 to 1.6 hours, 01 for 1.6 to 3.2 hours, 10 for 3.2 to 6.4 hours and 11 for 6.4 to 12.8 hours.

BlockDis: Block Discharge. The BlockDis bit is used for managing the discharging of multiple batteries in parallel and is enabled by setting nPackCfg.ParEn = 1. Set to 1 and clear Status.AllowChgB to block discharging while allowing charging (MAX17300/MAX17310 only).

nPackCfg Register (1B5h)

Register Type: Special

The nPackCfg register configures the voltage and temperature inputs to the A/D and also to the fuel gauge. The default factory setting for nPackCfg is 0x1101 for the MAX1730x/MAX1731x. Table 84 shows the register format.

Table 84. nPackCfg Register (1B5h) Format

D15	D14	D13	D12	D11	D10	D9	D8	D7	D6	D5	D4	D3	D2	D1	D0
0	0	0	A1En	R100	001			0	ParEn	0	0	0001			

R100: If using 100kΩ NTC, set R100 = 1; if using 10kΩ NTC, set R100 = 0.

A1En: AIN1 Channel Enable. Set to 1 to enable temperature measurements on the TH pin.

ParEn: Parallel Charging Functionality Enable. Set to 1 to enable parallel charging function. (MAX17300/MAX17310 only)

All other bits are reserved for future usage.

0: Bit must be written 0. Do not write 1.

1: Bit must be written 1. Do not write 0.

nMiscCfg2 Register (1E4h) (MAX17300/MAX17310 Only)

Register Type: Special

The nMiscCfg2 register configures the noiseless filter, smart-full threshold, and nMargin. The default factory setting for nMiscCfg2 is 0x0800 for the MAX17300/MAX17310. Table 85 shows the register format.

Table 85. nMiscCfg2 Register (0x1E4h) Format

D15	D14	D13	D12	D11	D10	D9	D8	D7	D6	D5	D4	D3	D2	D1	D0
0	0	0	0	1	0	0	dSmartFull							nMargin	

dSmartFull: Delta Smart-Full Threshold. The smart-full threshold is set relative to ChargingVoltage (see nJEITAV). dSmartFull is a positive number with 0.625mV resolution and 80mV range. It is translated to a negative offset relative to

ChargingVoltage so that smart-full threshold is calculated as:

Smart-Full Threshold = ChargingVoltage – (dSmartFull x 0.625mV)

Whenever VFOCV is greater than smart-full threshold, it has the same behavior as end-of-charge detection with the addition that the charge FET opens after the nDelayCfg.FullTimer expires.

The release condition of smart-full is VFOCV is less than smart-full threshold - hysteresis (10mV) and discharging.

To disable the smart-full functionality, set dSmartFull = 0. Factory default is 0.

nMargin: Charge\Discharge Current Detection Comparator Threshold. Configure nMargin = 0.

nDesignVoltage Register (1E3h)

Register Type: Special

Nonvolatile Restore: There is no associated restore location for this register.

Table 86. nDesignVoltage Register (1E3h) Format

D15	D14	D13	D12	D11	D10	D9	D8	D7	D6	D5	D4	D3	D2	D1	D0
Vminsys								Vdesign							

Vminsys: (unsigned byte) = 'Minimum system voltage' specification for the design. Generates MinSysVoltage value.

Vdesign: (unsigned byte) = 'Design voltage' specification for the design.

Each byte has an lsb = 20mV (resolution) giving a full scale range = 0V to 5.12V.

These values are used in SBS calculations only when enSBS = 1.

Vminsys 'translates' to sMinSysVoltage word, while Vdesign 'translates' to sDesignVolt word, where the lsb = 1mV.

MinSysVoltage = (0xFF00 and nDesignVoltage)

sMinSysVoltage = [(0xFF00 and nDesignVoltage) >> 8] x 20 (mV)

sDesignVolt = (0x00FF and nDesignVoltage) x 20 (mV)

Memory Locks

ModelGauge m5 RAM registers and all non-volatile memory locations can be permanently locked to prevent accidental data loss in the application. Locking a memory block only prevents future writes to the locations. Reading locked locations is still allowed. **Note that locking a memory location is permanent, so carefully choose all desired locks before sending the NV LOCK command.** The SHA secret is stored in separate secure nonreadable memory. There is a different command for locking the SHA secret and its state is not displayed in the Lock register. See the *SHA_Authentication* section for details. Once a lock bit is set it can never be cleared. Table 65 shows which lock bits correspond to which memory blocks of the IC.

NV LOCK [6AXXh]

This command permanently locks a block or blocks of memory. To set a lock, send 6AXXh to the Command register where the lower 5 bits of the command determine which locks are set. Table 87 shows a detailed format of the NV LOCK command. Set each individual LOCK bit to 1 to LOCK the corresponding register block. Set the LOCK bit to 0 to do nothing at this time. For example, writing 6A02h to the Command register sets LOCK2. Writing 6A1Fh sets all five locks. Writing 6A00h sets no locks.

Table 87. Format of LOCK Command

D15	D14	D13	D12	D11	D10	D9	D8	D7	D6	D5	D4	D3	D2	D1	D0
0	1	1	0	1	0	1	0	0	0	0	LOCK 5	LOCK 4	LOCK 3	LOCK 2	LOCK 1

LOCK1: Locks register pages 1A, 1B, 1E (Locking disables History Life Logging)

LOCK2: Locks register pages 01, 02, 03, 04, 0B, 0D

LOCK3: Locks register pages 18, 19

LOCK4: Locks register pages 1C

LOCK5: Locks register pages 1D

Locking Memory Blocks

Prior to sending the lock command, the CommStat.NVError bit should be cleared. After the command is sent, the CommStat.NVError bit should be read to determine if the lock command executed successfully. Note that locking memory blocks is a permanent operation. The recommended full sequence is:

1. Clear CommStat.NVError bit.
2. Write 0x6AXX to the Command register 0x060 to lock desired blocks.
3. Wait t_{UPDATE} for the copy to complete.
4. Check the CommStat.NVError bit. If set, repeat the process.

Reading Lock State

The Lock register at address 07Fh reports the state of each lock. See Table 88 for the format of the Lock register. If a LOCK bit is set, the corresponding memory block is locked. If the LOCK bit is cleared, the corresponding memory block is unlocked. Note that the SHA-256 Secret lock state cannot be read through this register.

Table 88. Format of Lock Register (07Fh)

D15	D14	D13	D12	D11	D10	D9	D8	D7	D6	D5	D4	D3	D2	D1	D0
X	X	X	X	X	X	X	X	X	X	X	LOCK 5	LOCK 4	LOCK 3	LOCK 2	LOCK 1

X: Don't Care

1: LOCK is set

0: LOCK is clear

Analog Measurements

The MAX1730x/MAX1731x monitors cell pack voltage, cell pack current, cell pack temperature, and the voltage of the cell. This information is provided to the fuel-gauge algorithm to predict cell capacity, trigger protection FETs in case of fault conditions, and also made available to the user. Note that ADC related register information is not maintained while the IC is in shutdown mode. The following register information is invalid until the first measurement cycle after the IC returns to active mode of operation.

Voltage Measurement

The MAX1730x/MAX1731x monitors the voltage at the BATT pin.

VCell Register (01Ah)

Register Type: Voltage

Nonvolatile Backup: None

Each update cycle, the lowest reading from all cell voltage measurements is placed in the VCell register. VCell is used as the voltage input to the fuel-gauge algorithm and trigger protection FETs in case of fault conditions.

VCellRep Register (012h) (MAX17300/MAX17310 Only)

Register Type: Voltage

Nonvolatile Backup: None

VCellRep reports a low-noise measurement of battery voltage as shown in Figure 27.

Note: See *Modes of Operation* section for details to enable.

AvgVCell Register (019h)

Register Type: Voltage

Nonvolatile Backup: None

The AvgVCell register reports an average of the VCell register readings. The time period for averaging is configurable from a 12 second to 24 minute time period. See the FilterCfg register description for details on setting the time filter. The first VCell register reading after power up or exiting shutdown mode sets the starting point of the AvgVCell register. Note that when a cell relaxation event is detected, the averaging period changes to the period defined by the RelaxCfg.dt setting. The register reverts back to its normal averaging period when a charge or discharge current is detected.

MaxMinVolt Register (0008h)

Register Type: Special

Nonvolatile Backup: Saves to nMaxMinVolt (1ACh) if nNVCfg2.enMMV is set (does not restore from nonvolatile).

Initial Value: 0x00FF

The MaxMinVolt register maintains the maximum and minimum of VCell register values since device reset. Each time the voltage registers update, they are compared against these values. If the new reading is larger than the maximum or less than the minimum, the corresponding value is replaced with the new reading. At power-up, the maximum voltage value is set to 00h (the minimum) and the minimum voltage value is set to FFh (the maximum). Therefore, both values are changed to the voltage register reading after the first update. Host software can reset this register by writing it to its power-up value of 0x00FF. The maximum and minimum voltages are each stored as 8-bit values with a 20mV resolution. Table 89 shows the register format.

Table 89. MaxMinVolt (008h)/nMaxMinVolt (1ACh) Register Format

D15	D14	D13	D12	D11	D10	D9	D8	D7	D6	D5	D4	D3	D2	D1	D0
MaxVCELL								MinVCELL							

MaxVCELL: Maximum VCell register reading (20mV resolution).

MinVCELL: Minimum VCell register reading (20mV resolution).

MaxMinVolt is not cumulative across the entire battery lifetime. After each periodic nonvolatile-memory save, MaxMinVolt resets to 0x00FF to find the next max/min volt across the next segment of battery life. This behavior helps provide a useful log across the battery lifetime where each log segment shows the maximum and minimum voltage experienced across only that segment.

MinVolt Register (0ADh)

Register Type: Voltage

Nonvolatile Backup: None

MinVolt is doing the same job as with MaxMinVolt's minimum voltage but with a finer resolution. It is used for Intel dynamic power tests.

The MinVolt register maintains the minimum BATT register value within a 45 second period or until cleared by host software. Each time the BATT register updates, it is compared against its value. If the reading is less than the minimum, the corresponding value is replaced with the new reading. At power-up, MinVolt value is set to 0xFFFF. Therefore, value is changed to the BATT register reading after the first update. Host software can reset this register by writing it to its power-up value of 0xFFFF. LSB is 1.25mV.

Cell1 Register (0D8h)

Register Type: Voltage

Nonvolatile Backup: None

In the MAX1730x/MAX1731x the Cell1 register duplicates the voltage from the VCell register (measured at the BATT pin). This register is only provided for cross-compatibility with multicell chips where a set of cell voltages is provided.

AvgCell1 Register (0D4h)

Register Type: Voltage

Nonvolatile Backup: None

The AvgCell1 register reports an 8-sample filtered average of the corresponding Cell1 register readings.

Batt Register (0D7h)

Register Type: Special

Nonvolatile Backup: None

The Batt register reports the VCell voltage on a 81.92V scale for cross-compatibility with other Analog Devices gauges that provide multicell functionality. This allows a generalized driver to interact both with single-cell and multicell chips.

Current Measurement

The MAX1730x/MAX1731x is able to monitor the current flow through the cell pack by measuring the voltage between the CSN and CSP pins over a ±51.2mV range. While in active mode, updates occur in intervals of 351.5ms. In hibernate mode, the update interval is set by the nHibCfg register. All ICs are calibrated for current-measurement accuracy at the factory. However, if the application requires, Current register readings can be adjusted by changing the nCGain register setting.

If the application uses a sense resistor with a large temperature coefficient such as a copper metal board trace, current readings can be adjusted based on the temperature measured by the IC. The CGTempCo register stores a percentage per ºC value that are applied to current readings if the nNVCfg2.enMet bit is set. If nNVCfg1.enMtl = 0, the default temperature coefficient of copper is used for temperature adjustments. If enMt = 1, the CGTempCo register value is used for temperature adjustments.

Additionally, the IC maintains a record of the minimum and maximum current measured by the IC and an average current over a time period defined by the host. Contents of the Current and AvgCurrent registers are indeterminate for the first conversion cycle time period after IC power-up.

Current Measurement Timing

Current measurements are always enabled regardless of nPackCfg settings. Table 90 shows the timing for current measurements made by the IC. All times in this table are considered typical.

Table 90. Current Measurement Timing

APPLICATION	NPACKCFG SETTING	REGISTER	FIRST UPDATE AFTER RESET[1]	UPDATE RATE IN ACTIVE MODE	UPDATE RATE IN HIBERNATE MODE[2]
Any	Any	Current	150ms	351ms	1.4s
		AvgCurrent	150ms	351ms	1.4s

1. AvgCurrent register is initialized using a single reading instead of an average.

2. Hibernate mode update times assume the recommended nHibCfg.HibScalar setting of 4 task periods.

Current Register (01Ch)

Register Type: Current

Nonvolatile Backup: None

The IC measures the voltage between the CSP and CSN pins and the result is stored as a two's complement value in the Current register. Voltages outside the minimum and maximum register values are reported as the minimum or maximum value. The register value should be divided by the sense resistance to convert to amps. The value of the sense resistor determines the resolution and the full-scale range of the current readings. Table 91 shows range and resolution values for typical sense resistances.

Table 91. Current Measurement Range and Resolution vs. Sense Resistor Value

BATTERY FULL CAPACITY (mAh)	SENSE RESISTOR (mΩ)	nR_{SENSE}	CURRENT REGISTER RESOLUTION (µA)	CURRENT REGISTER RANGE (A)	CAPACITY RESOLUTION (mAh)	MAXIMUM CAPACITY (mAh)
> 4000	1	0064h	1562.5	±51.2	5	144360
> 2000	2	00C8h	781.25	±25.6	2.5	71680
> 800	5	01F4h	312.5	±10.24	1	28672
> 400	10	03E8h	156.25	±5.12	0.5	14336
> 200	20	07D0h	78.125	±2.56	0.25	7168
> 80	50	1388h	31.25	±1.02	0.1	2867
> 40	100	2710h	15.625	±0.51	0.05	1433

CurrRep Register (022h) (MAX17300/MAX17310 Only)

Register Type: Current

Nonvolatile Backup: None

CurrRep reports a low-noise measurement of current as shown in Figure 27.

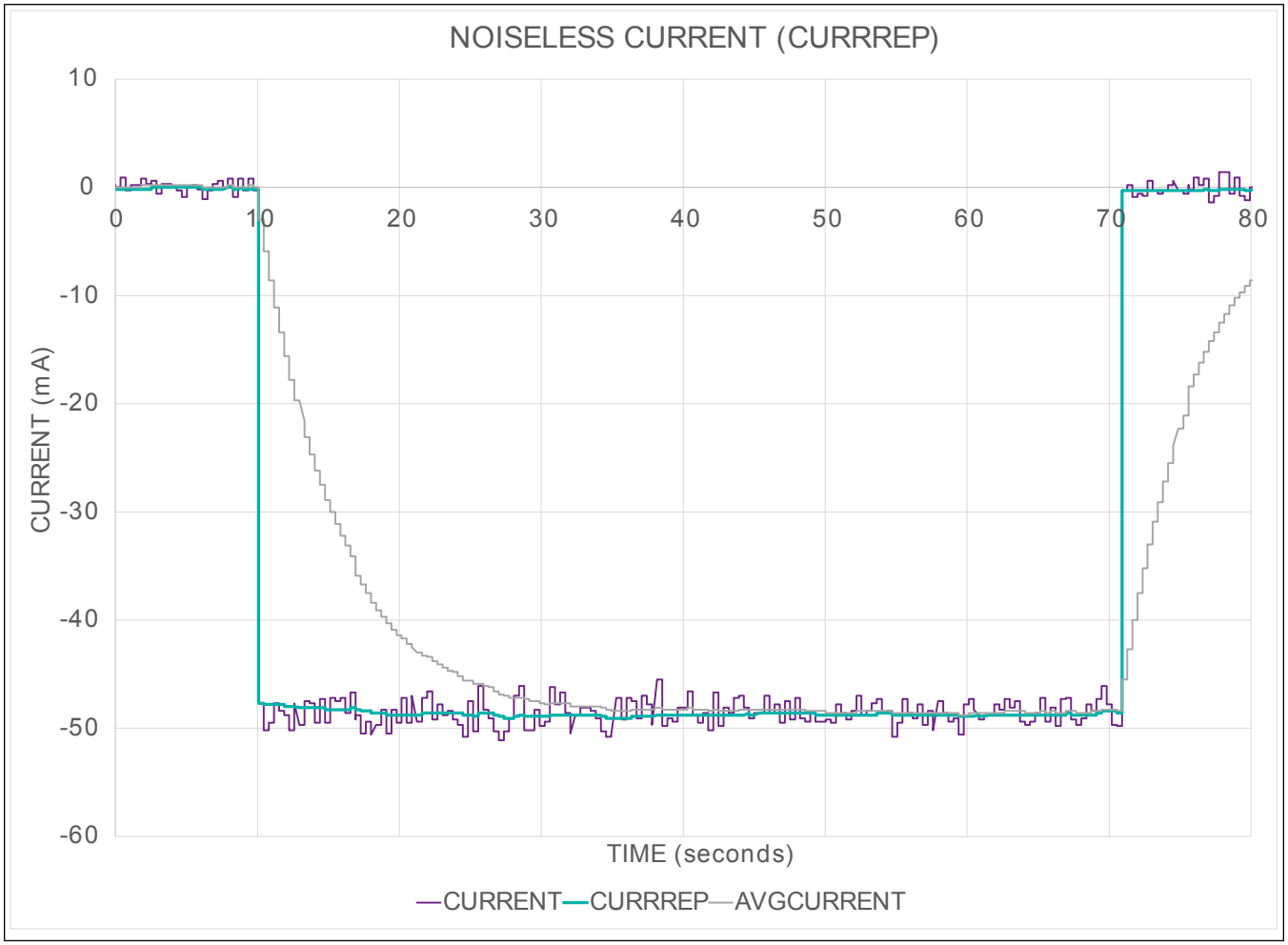

Figure 27. Noiseless Current

Note: See the *Modes of Operation* section for details to enable.

AvgCurrent Register (01Dh)

Register Type: Current

Nonvolatile Backup: None

The AvgCurrent register reports an average of Current register readings over a configurable 0.7 second to 6.4 hour time period. See the FilterCfg register description for details on setting the time filter. The first Current register reading after returning to active mode sets the starting point of the AvgCurrent filter.

MaxMinCurr Register (00Ah)

Register Type: Special

Nonvolatile Backup: periodically saves to nMaxMinCurr (1ABh) if nNVCfg2.enMMC is set, but does not restore from nonvolatile memory.

Alternate Initial Value: 0x807F

The MaxMinCurr register maintains the maximum and minimum Current register values since the last IC reset or until cleared by host software. Each time the Current register updates, it is compared against these values. If the reading is larger than the maximum or less than the minimum, the corresponding value is replaced with the new reading. At power-

up, the maximum current value is set to 80h (the minimum) and the minimum current value is set to 7Fh (the maximum). Therefore, both values are changed to the Current register reading after the first update. Host software can reset this register by writing it to its power-up value of 0x807F. The maximum and minimum voltages are each stored as two's complement 8-bit values with 0.4mV/RSENSE resolution. Table 92 shows the register format.

Table 92. MaxMinCurr (00Ah)/nMaxMinCurr (1ABh) Register Format

D15	D14	D13	D12	D11	D10	D9	D8	D7	D6	D5	D4	D3	D2	D1	D0
MaxCurrent								MinCurrent							

MaxCurrent: Maximum Current register reading (0.40mV resolution)

MinCurrent: Minimum Current register reading (0.40mV resolution)

MaxMinCurr is not cumulative across the entire battery lifetime. After each periodic nonvolatile-memory save, MaxMinCurr resets to 0x807F to find the next maximum and minimum current across the next segment of battery life. This behavior helps provide a useful log across the battery lifetime where each log segment shows the maximum and minimum current experienced across only that segment.

MinCurr Register (0AEh)

Register Type: Current

Nonvolatile Backup: None

MinCurr is doing the same job as with MaxMinCurr's minimum current but with a finer resolution. It is used for Intel dynamic power tests.

The MinCurr register maintains the minimum discharge Current register value within a 45 seconds period or until cleared by host software. Each time the Current register updates, it is compared against its value. If the reading is less than the minimum, the corresponding value is replaced with the new reading. At power-up, MinCurr value is set to 0 (maximum discharge current). Therefore, value is changed to the Current register reading after the first update during discharge. Host software can reset this register by writing it to its power-up value of 0. LSB is 0.0015625mV/RSense.

nCGain Register (1C8h)

Register Type: Special

The nCGain register adjusts the gain and offset of the current measurement result. The current measurement A/D is factory trimmed to data sheet accuracy without the need for the user to make further adjustments. The recommended default for the nCGain register is 0x4000 which applies no adjustments to the Current register reading.

For specific application requirements, the CGain and COff values can be used to adjust readings as follows:

Current register = (current A/D reading × (CGain / 256)) + COff

CGain and COff are combined into a single register formatted as shown in Table 93.

Table 93. nCGain Register (1C8h) Format

D15	D14	D13	D12	D11	D10	D9	D8	D7	D6	D5	D4	D3	D2	D1	D0
CGain										COff					

COff: COff has a range of -32 to +31 LSbs. However, It is normally not recommended to calibrate COff. **COff = 0** is recommended for most applications.

CGain: The recommended default value of CGain = 0x100 corresponds to a gain of 1. CGain can be calculated as follows: CGain = ((MeasuredCurrent/ReportedCurrent) x 0x0100). CGain is a signed value and can be negative.

CGTempCo (0B8h)/nCGTempCo (0x1C9) Register

Register Type: Special

Alternate Initial Value: 0x20C8

If nNVCfg1.enCrv = 0 and nNVCfg2.enMet = 1, then CGTempCo is used to adjust current measurements for temperature. CGTempCo has a range of 0% to 3.1224% per °C with a step size of 3.1224/0x10000 percent per °C. If the nNVCfg1.enMtl bit is clear, CGTempCo defaults to a value of 0x20C8 or 0.4% per °C which is the approximate

temperature coefficient of a copper trace. If the nNVCfg1.enMtl bit is set, CGTempCo restores from nCGTempCo (1C9h) after IC reset allowing a custom sense resistor temperature coefficient to be used. Note that nNVCfg1.enCrv and nNVCfg2.enMet cannot be enabled simultaneously.

Copper Trace Current Sensing

The MAX1730x/MAX1731x has the ability to measure current using a copper board trace instead of a traditional sense resistor. The main difference being the ability to adjust to the change in sense resistance over temperature. To enable copper trace current sensing, set the following configuration bits: nNVCfg1.enCrv = 0 and nNVCfg2.enMet = 1. The IC's default temperature adjustment is 0.4% per °C, but can be adjusted using the nTCurve register if nNVCfg1.enMtl = 1. Note that copper trace current sensing cannot be enabled at the same time as thermistor curve adjustment. For 1-ounce copper, a length to width ratio of 6:1 creates a 0.0035Ω sense resistor which is suitable for most applications. Table 94 summarizes the IC setting for copper trace sensing.

Table 94. Copper Trace Sensing

PARAMETER	SETTING	RESULT
nNVCfg1.enCRV	0	Thermistor curve compensation disabled.
nNVCfg1.enMet	1	Sense resistor temperature compensation enabled.
nNVCfg2.enMlt	0	Sense resistor temperature compensation set to default of 0.4% per °C (typical copper).
nRense	0x012C	Sense resistor indicator to host software set to 0.0035Ω.
R_{SENSE} Size	6:1	A 6:1 length to width ratio of 1oz copper gives a resistance of 0.0035Ω.

Temperature Measurement

The IC can be configured to measure its own internal die temperature and an external NTC thermistor. See the nPackCfg register for details.

Every 1.4s the IC biases the external thermistor with an internal trimmed pullup. After the pullup is enabled, the IC waits for a settling period of tPRE prior to making measurements on the TH pin. Measurement results are converted to a ratiometric value from 0 to 100%. The active pullup is disabled when temperature measurements are complete. This feature limits the time the external resistor-divider network is active and lowers the total amount of energy used by the system.

The ratiometric results are converted to temperature using the temperature gain (nTGain), temperature offset (nTOff), and temperature curve (nTCurve) register values each time the TH pin is measured. Internal die temperature measurements are factory calibrated and are not affected by nTGain, nTOff, and nTCurve register settings. Proper nTCurve configuration is needed to achieve thermistor accuracy from -40ºC to +85ºC. For accuracy from -10ºC to +60ºC, nTCurve is not needed.

Devices with a DevName≥4070h support new thermistor calculations which can achieve thermistor accuracy within ±0.5ºC from -40ºC to +85ºC. To enable the new thermistor calculations, set nNVCfg2.enTherm = 1. The ratiometric results are converted to temperature using the nThermCfg register each time the TH pin is measured. nTGain is repurposed as nThermCfg, and nTOff and nTGain can be used as general purpose data storage.

Additionally, the IC maintains a record of the minimum and maximum temperature measured, and an average temperature over a time period defined by the host.

Temperature Measurement Timing

Temperature measurement channels are individually enabled using the nPackCfg register. A/D measurement order and firmware post processing determine when a valid reading becomes available to the user. In addition, not all channels are measured each time through the firmware task loop. Selection options for enabled channels create a large number of possible timing options. Table 95 shows the timing for all temperature measurements made by the IC for some typical pack configurations. All times in this table are considered typical.

Table 95. Temperature Measurement Timing

APPLICATION	NPACKCFG SETTING	REGISTER	FIRST UPDATE AFTER RESET	UPDATE RATE IN ACTIVE MODE[1]	UPDATE RATE IN HIBERNATE MODE[2]
Die Temperature Only	nPackCfg.A1En = 0	Temp, IntTemp, AvgIntTemp	550ms	351ms	1.4s
		AvgTA		351ms	
Die Temperature and Thermistor	nPackCfg.A1En = 1	IntTemp, Temp1, Temp, AvgIntTemp, AvgTemp1	550ms	1406ms	5.625s
		AvgTA		351ms	1.4s

1. Not all registers update at the same time. Updates are staggered to one channel per task period. Update order is IntTemp and Temp.

2. Hibernate mode update times assume the recommended nHibCfg.HibScalar setting of 4 task periods.

Temp Register (01Bh)

Register Type: Temperature

Nonvolatile Backup: None

The Temp register is the input to the fuel gauge algorithm. The Temp register reflects the thermistor temperature if enabled, and the die-temperature if the thermistor is disabled.

AvgTA Register (016h)

Register Type: Temperature

Nonvolatile Backup: None

The AvgTA register reports an average of the readings from the Temp register. Averaging period is configurable from 6 minutes up to 12 hours as set by the FilterCfg register. The first Temp register reading after returning to active mode sets the starting point of the averaging filters.

MaxMinTemp Register (009h)

Register Type: Special

Nonvolatile Backup: Periodically saves to nMaxMinTemp (1ADh) if nNVCfg2.enMMT is set, but does not restore from nonvolatile memory.

Alternate Initial Value: 0x807F

The MaxMinTemp register maintains the maximum and minimum Temp register (008h) values since the last fuel-gauge reset or until cleared by host software. Each time the Temp register updates, it is compared against these values. If the reading is larger than the maximum or less than the minimum, the corresponding values are replaced with the new reading. At power-up, the maximum value is set to 80h (minimum) and the minimum value is set to 7Fh (maximum). Therefore, both values are changed to the Temp register reading after the first update. Host software can reset this register by writing it to its power-up value of 0x807F. The maximum and minimum temperatures are each stored as two's complement 8-bit values with 1°C resolution. Table 96 shows the format of the register.

Table 96. MaxMinTemp (009h)/nMaxMinTemp (1ADh) Register Format

D15	D14	D13	D12	D11	D10	D9	D8	D7	D6	D5	D4	D3	D2	D1	D0
MaxTemperature								MinTemperature							

MaxTemperature: Maximum Temp register reading (1ºC resolution)

MinTemperature: Minimum Temp register reading (1ºC resolution)

MaxMinTemp is not cumulative across the entire battery lifetime. After each periodic nonvolatile memory save, MaxMinTemp resets to 0x807F to find the next maximum and minimum temperatures across the next segment of battery

life. This behavior helps provide a useful log across the battery lifetime where each log segment shows the maximum and minimum temperature experienced across only that segment.

nTCurve Register (1C9h)

Register Type: Special

Nonvolatile Restore: There is no associated restore location for this register

If nNVCfg1.enCrv = 1 and nNVCfg2.enMet = 0, then nTCurve applies thermistor measurement curvature correction to allow thermistor measurements to be accurate over a wider temperature range. A ±3°C accuracy can be achieved over a -40°C to +85°C operating range. See Table 97 for recommended nTCurve values. If nNVCfg1.enCrv = 0 and nNVCfg2.enMet = 0, then this location can be used as general purpose data storage.

nTGain (1CAh) Register/nTOff (1CBh) Register

Register Type: Special

External NTC thermistors generate a temperature related voltage measured at the TH pin. The nTGain, nTOff, and nTCurve registers are used to calculate temperature with an accuracy of ±3°C over a range of -40°C to +85°C. Table 97 lists the recommended nTGain, nTOff, and nTCurve register values for common NTC thermistors.

Table 97. Register Settings for Common Thermistor Types

THERMISTOR	R_{25C} (kΩ)	BETA	RECOMMENDED NTGAIN	RECOMMENDED NTOFF	RECOMMENDED NTCURVE
Semitec 103AT-2, Murata NCP15XH103F03RC	10	3435	0xEE56	0x1DA4	0x0025
Fenwal 197-103LAG-A01	10	3974	0xF49A	0x16A1	0x0064
TDK Type F	10	4550	0xF284	0x18E8	0x0035
Murata NCU15WF104F6SRC	100	4250	0xEEF6	0x1BC6	0x0022
TDK NTCG064EF104FTBX	100	4225	0xEF99	0x1C31	0x001C

nThermCfg (1CAh) (DevName≥4070h Only)

External NTC thermistors generate a temperature related voltage measured at the TH pin. Set nThermCfg register to compensate the thermistor for accurate translation of temperature when *nNVCfg1*.enTherm = 1. If nNVCfg1.enTherm = 1, then nTOff and nTCurve locations can be used as general purpose data storage.

Table 98 lists common NTC thermistors with their associated Beta value and the nThermCfg value. The thermistors in the table translate within ±0.5°C from -40°C to +85°C. For other thermistors, use the equation to translate within ±2.5°C.

Table 98. Register Settings for Common Thermistor Types with New Thermistor Calculations

THERMISTOR	R_{25C}(kΩ)	BETA at +25°C to +85°C	nTHERMCFG
Murata NCP15XH103F03RC	10	3435	71BEh
Semitec 103AT-2	10	3435	91C3h
TDK B57560G1103 7003	10	3610	5183h
Murata NCU15WF104F6SRC	100	4250	48EBh
NTC TH11-4H104F	100	4510	08D9h
TDK NTCG064EF104FTBX	100	4225	58EFh
Other 10K	10	nThermCfg = 7000h + (3245919/Beta* - 512)	
Other 100K	100	nThermCfg = 3000h + (3245919/Beta* - 512)	

*Use Beta +25°C to +85°C.

DieTemp (034h) Register

Register Type: Temperature

Nonvolatile Backup: None

This register displays temperature in degrees Celsius, ±128ºC, or 1ºC in the high-byte or 1/256ºC LSB.

AvgDieTemp (040h) Register

Register Type: Temperature

Nonvolatile Backup: None

The AvgDieTemp register reports a 4-sample filtered average of the DieTemp register.

Power

Power Register (0B1h)

Instant power calculation from immediate current and voltage. LSB is 0.8mW.

AvgPower Register (0B3h)

Filtered Average Power from the power register. LSB is 0.8mW with a 10mΩ sense resistor. Filter bits locate in Config2.POWR.

Status and Configuration Registers

The following registers control IC operation not related to the fuel gauge such as power-saving modes, nonvolatile backup, and ALRT pin functionality.

DevName Register (021h)

Register Type: Special

Nonvolatile Backup: None

The DevName register holds device type and firmware revision information. This allows host software to easily identify the type of IC being communicated to. Table 99 shows the DevName register format.

Table 99. DevName Register (021h) Format

D15	D14	D13	D12	D11	D10	D9	D8	D7	D6	D5	D4	D3	D2	D1	D0
Revision												Device			

The DevName for each part number is listed in Table 100.

Table 100. DevName For Each Part Number

PART NUMBER	PASS 2 DevName	PASS 3 DevName
MAX17300/MAX17310		4070h
MAX17301/MAX17311	4065h	4074h
MAX17302/MAX17312	4066h	4078h
MAX17303/MAX17313	4067h	407Ch

nPReserved0/1/2/3 Registers (Addresses 1C0h-1C3h) must be set accoring to the DevName for proper operation.

Table 101. nPReserved0-3 Settings Based on DevName

REGISTER NAME	REGISTER ADDRESS	VALUE FOR DEVNAME<4070h	VALUE FOR DEVNAME≥4070h
nPReserved0	1C0h	8480h	0000h
nPReserved1	1C1h	8780h	0000h
nPReserved2	1C2h	0000h	0000h

Table 101. nPReserved0-3 Settings Based on DevName (continued)

REGISTER NAME	REGISTER ADDRESS	VALUE FOR DEVNAME<4070h	VALUE FOR DEVNAME≥4070h
nPReserved3	1C3h	DE00h	E000h

nROMID0 (1BCh)/nROMID1 (1BDh)/nROMID2 (1BEh)/nROMID3 (1BFh) Registers

Register Type: Special

Nonvolatile Restore: There are no associated restore locations for these registers.

Each MAX1730x/MAX1731x IC contains a unique 64 bit identification value that is contained in the nROMID registers. Note this is the same ID that can be read using the 1-Wire ROM ID commands. The unique ID can be reconstructed from the nROMID registers as shown in Table 102.

Table 102. nROMID Registers (1BCh to 1BFh) Format

NROMID3[15:0]	NROMID2[15:0]	NROMID1[15:0]	NROMID0[15:0]
ROM ID [63:48]	ROM ID [47:32]	ROM ID [31:16]	ROM ID [15:0]

nRSense Register (1CFh)

Register Type: Special

Nonvolatile Restore: There is no associated restore location for this register.

The nRSense register is the designated location to store the sense resistor value used by the application. This value is not used by the IC as all current and capacity information is reported in terms of µV and µVh. Host software can use the nRSense register value to convert current and capacity information into mA and mAh. It is recommended that the sense resistor value be stored with an LSb weight of 10µΩ giving a range of 10µΩ to 655.35mΩ. Table 103 shows recommended register settings based on common sense resistor values.

Table 103. Recommended nRSense Register Values for Common Sense Resistors

SENSE RESISTOR (Ω)	NRSENSE REGISTER
0.005	0x01F4
0.010	0x03E8
0.020	0x07D0

Status Register (000h)

Register Type: Special

Nonvolatile Backup: None

Initial Value: 0x0002

The Status register maintains all flags related to alert thresholds. Table 104 shows the Status register format.

Table 104. Status Register (000h) Format

D15	D14	D13	D12	D11	D10	D9	D8	D7	D6	D5	D4	D3	D2	D1	D0
PA	Smx	Tmx	Vmx	X	Smn	Tmn	Vmn	dSOCi	Imx	$\overline{\text{AllowChgB}}$	X	Bst	Imn	POR	X

POR: Power-On Reset. This bit is set to 1 when the device detects that a software or hardware POR event has occurred. This bit must be cleared by system software to detect the next POR event. POR is set to 1 at power-up.

Imn: Minimum Current Alert Threshold Exceeded. This bit is set to a 1 whenever a Current register reading is below the minimum IAlrtTh value. This bit is cleared automatically when Current rises above minimum IAlrtTh value. Imn is set to 0 at power-up.

Bst: Battery Status. Useful when the IC is used in a host side application. This bit is set to 0 when a battery is present in the system and set to 1 when the battery is absent. Bst is set to 0 at power-up.

Imx: Maximum Current Alert Threshold Exceeded. This bit is set to 1 whenever a Current register reading is above the maximum IAlrtTh value. This bit is cleared automatically when Current falls below maximum IAlrtTh value. Imx is set to 0

at power-up.

dSOCi: State of Charge 1% Change Alert. This is set to 1 whenever the RepSOC register crosses an integer percentage boundary such as 50.0%, 51.0%, etc. Must be cleared by host software. dSOCi is set to 0 at power-up.

Vmn: Minimum Voltage Alert Threshold Exceeded. This bit is set to 1 whenever a VCell register reading is below the minimum VAlrtTh value. This bit may or may not need to be cleared by system software to detect the next event. See Config.VS bit description. Vmn is set to 0 at power-up.

Tmn: Minimum Temperature Alert Threshold Exceeded. This bit is set to 1 whenever a Temperature register reading is below the minimum TAlrtTh value. This bit may or may not need to be cleared by system software to detect the next event. See Config.TS bit description. Tmn is set to 0 at power-up.

Smn: Minimum SOC Alert Threshold Exceeded. This bit is set to 1 whenever SOC falls below the minimum SAlrtTh value. This bit may or may not need to be cleared by system software to detect the next event. See Config.SS and MiscCFG.SACFG bit descriptions. Smn is set to 0 at power-up.

Vmx: Maximum Voltage Alert Threshold Exceeded. This bit is set to 1 whenever a VCell register reading is above the maximum VAlrtTh value. This bit may or may not need to be cleared by system software to detect the next event. See Config.VS bit description. Vmx is set to 0 at power-up.

Tmx: Maximum Temperature Alert Threshold Exceeded. This bit is set to 1 whenever a Temperature register reading is above the maximum TAlrtTh value. This bit may or may not need to be cleared by system software to detect the next event. See Config.TS bit description. Tmx is set to 0 at power-up.

Smx: Maximum SOC Alert Threshold Exceeded. This bit is set to 1 whenever SOC rises above the maximum SAlrtTh value. This bit may or may not need to be cleared by system software to detect the next event. See Config.SS and MiscCFG.SACFG bit descriptions. Smx is set to 0 at power-up.

PA: Protection Alert. This bit is set to 1 when there is a protection event. The details of which protection event can be found in the ProtAlrts register. This bit must be cleared by system software to detect the next protection event. However, prior to clearing this bit, the ProtAlrts register must first be written to 0x0000. ProtAlrt is set to 0 at power-up. (MAX17300/10 Only)

$\overline{\text{AllowChgB}}$: Allow Charge Bar. The AllowChgB bit is used for managing the charging or discharging of multiple batteries in parallel and is enabled by setting nPackCfg.ParEn = 1. Clear this bit to 0 to allow charging. Clear this bit to 0 to also block discharging when nConfig.BlockDis = 1. This bit must be cleared every nDelayCfg.ChgWDT seconds for continuous charging and continuous discharge blocking. (MAX17300/MAX17310 only)

X: Don't Care. This bit is undefined and can be logic 0 or 1.

Status2 Register (0B0h)

Register Type: Special

Nonvolatile Backup: None

Initial Value: 0x0000

The Status2 register maintains status of hibernate mode. Table 105 shows the Status register format.

Table 105. Status2 Register (0B0h) Format

D15	D14	D13	D12	D11	D10	D9	D8	D7	D6	D5	D4	D3	D2	D1	D0
X	X	X	X	X	X	X	X	X	X	X	X	X	X	Hib	x

Hib: Hibernate Status. This bit is set to 1 when the device is in hibernate mode or 0 when the device is in active mode. Hib is set to 0 at power-up.

X: Don't Care. This bit is undefined and can be logic 0 or 1.

nHibCfg Register (1BBh)

Register Type: Special

Nonvolatile Restore: None

The nHibCfg register controls hibernate mode functionality. The IC enters hibernate mode, if the measured system

current falls below the HibThreshold setting for longer than the HibEnterTime delay. While in hibernate mode the IC reduces its operating current by slowing down its task period as defined by the HibScalar setting. The IC automatically returns to active mode of operation if current readings go above the HibThreshold setting for longer than the HibExitTime delay. Table 106 shows the register format.

Table 106. nHibCfg Register (1BBh) Format

D15	D14	D13	D12	D11	D10	D9	D8	D7	D6	D5	D4	D3	D2	D1	D0
EnHib	HibEnterTime			HibThreshold				0	0	0	HibExitTime		HibScalar		

0: Bit must be written 0. Do not write 1.

HibScalar: Sets the task period while in hibernate mode based on the following equation:

Hibernate Mode Task Period(s) = 702ms x $2^{(HibScalar)}$

HibExitTime: Sets the required time period of consecutive current readings above the HibThreshold value before the IC exits hibernate and returns to active mode of operation.

Hibernate Mode Exit Time(s) = (HibExitTime + 1) x 702ms x $2^{(HibScalar)}$

HibThreshold: Sets the threshold level for entering or exiting hibernate mode. The threshold is calculated as a fraction of the full capacity of the cell using the following equation:

Hibernate Mode Threshold(mA) = (FullCap(mAh)/0.8 hours)/$2^{(HibThreshold)}$

HibEnterTime: Sets the time period that consecutive current readings must remain below the HibThreshold value before the IC enters hibernate mode as defined by the following equation. The default HibEnterTime value of 000b causes the IC to enter hibernate mode if all current readings are below the HibThreshold for a period of 5.625 seconds, but the IC could enter hibernate mode as quickly as 2.812 seconds.

2.812s x $2^{(HibEnterTime)}$ < Hibernate Mode Entry Time < 2.812s x $2^{(HibEnterTime + 1)}$

EnHib: Enable Hibernate Mode. When set to 1, the IC enters hibernate mode if conditions are met. When set to 0, the IC always remains in active mode of operation.

CommStat Register (061h)

Register Type: Special

Nonvolatile Backup: None

The CommStat register tracks the progress and error state of any command sent to the Command register. Table 107 shows the register format.

Table 107. CommStat Register (061h) Format

D15	D14	D13	D12	D11	D10	D9	D8	D7	D6	D5	D4	D3	D2	D1	D0
X	X	X	X	X	X	DISOff	CHGOff	X	X	X	X	X	NVError	NVBusy	X

X: Don’t Care. This bit is undefined and can be logic 0 or 1.

DISOff: Set this bit '1' to forcefully turn off DIS FET ignoring all other conditions if nProtCfg.CmOvrdEn is enabled. DIS FET remains off as long as this bit stays to '1'. Clear to '0' for normal operation.

CHGOff: Set this bit '1' to forcefully turn off CHG FET ignoring all other conditions if nProtCfg.CmOvrdEn is enabled. CHG FET remains off as long as this bit stays set to '1'. Clear to '0' for normal operation.

NVBusy: This read only bit tracks if nonvolatile memory is busy or idle. NVBusy defaults to 0 after reset indicating nonvolatile memory is idle. This bit sets after a nonvolatile related command is sent to the command register, and clears automatically after the operation completes.

NVError: This bit indicates the results of the previous SHA-256 or nonvolatile memory related command sent to the command register. This bit sets if there was an error executing the command. Once set, the bit must be cleared by system software in order to detect the next error.

At-Rate Functionality

The AtRate function allows host software to see theoretical remaining time or capacity for any given load current. AtRate can be used for power management by limiting system loads depending on present conditions of the cell pack. Whenever the AtRate register is programmed to a negative value indicating a hypothetical discharge current, the AtQResidual, AtTTE, AtAvSOC, and AtAvCap registers display theoretical residual capacity, time-to-empty, state-of-charge, and available capacity respectively. Host software should wait two full task periods (703ms minimum in active mode) after writing the AtRate register before reading any of the result registers.

AtRate Register (004h)

Register Type: Current

Nonvolatile Backup: None

Host software should write the AtRate register with a negative two's-complement 16-bit value of a theoretical load current prior to reading any of the at-rate output registers.

AtQResidual Register (0DCh)

Register Type: Capacity

Nonvolatile Backup: None

The AtQResidual register displays the residual charge held by the cell at the theoretical load current level entered into the AtRate register.

AtTTE Register (0DDh)

Register Type: Time

Nonvolatile Backup: None

The AtTTE register can be used to estimate time-to-empty for any theoretical current load entered into the AtRate register. The AtTTE register displays the estimated time to empty for the application by dividing AtAvCap by the AtRate register value.

AtAvSOC Register (0CEh)

Register Type: Percentage

Nonvolatile Backup: None

The AtAvSOC register holds the theoretical state of charge of the cell based on the theoretical current load of the AtRate register. The register value is stored as a percentage with a resolution of 0.0039% per LSB. If a 1% resolution state-of-charge value is desired, the host can read only the upper byte of the register instead.

AtAvCap Register (0DFh)

Register Type: Capacity

Nonvolatile Backup: None

The AtAvCap register holds the estimated remaining capacity of the cell based on the theoretical load current value of the AtRate register. The value is stored in terms of µVh and must be divided by the application sense-resistor value to determine the remaining capacity in mAh.

Alert Function

The Alert Threshold registers allow interrupts to be generated by detecting a high or low voltage, current, temperature, or state-of-charge. Interrupts are generated on the ALRT pin open-drain output driver. An external pullup is required to generate a logic-high signal. Alerts can be triggered by any of the following conditions:

- Over/undervoltage—VAlrtTr register threshold violation (upper or lower) and alerts enabled (Aen = 1).
- Over/undertemperature—TAlrtTr register threshold violation (upper or lower) and alerts enabled (Aen = 1).
- Over/undercurrent—IAlrtTr register threshold violation (upper or lower) and alerts enabled (Aen = 1).
- Over/under SOC—SAlrtTr register threshold violation (upper or lower) and alerts enabled (Aen = 1).

To prevent false interrupts, the threshold registers should be initialized before setting the Aen bit. Alerts generated by battery insertion or removal can only be reset by clearing the corresponding bit in the Status (000h) register. Alerts generated by a threshold-level violation can be configured to be cleared only by software, or cleared automatically when the threshold level is no longer violated. See the Config (01Dh) register description for details of the alert function configuration.

nVAlrtTh Register (18Ch)

Register Type: Special

Nonvolatile Restore: VAlrtTh (001h) if nNVCfg1.enAT is set.

Alternate Initial Value: 0xFF00 (Disabled)

The nVAlrtTh register shown in Table 108 sets upper and lower limits that generate an ALRT1 pin interrupt if exceeded by the VCell register value. The upper 8 bits set the maximum value and the lower 8 bits set the minimum value. Interrupt threshold limits are selectable with 20mV resolution over the full operating range of the VCell register. At power-up, the thresholds default to their maximum settings unless they are configured to be restored from nonvolatile memory instead by setting the nNVCfg1.enAT bit.

Table 108. VAlrtTh (001h)/nVAlrtTh (18Ch) Register Format

D15	D14	D13	D12	D11	D10	D9	D8	D7	D6	D5	D4	D3	D2	D1	D0
VMAX								VMIN							

VMAX: Maximum voltage reading. An alert is generated if the VCell register reading exceeds this value. This field has 20mV LSb resolution.

VMIN: Minimum voltage reading. An alert is generated if the VCell register reading falls below this value. This field has 20mV LSb resolution.

nTAlrtTh Register (18Dh)

Register Type: Special

Nonvolatile Restore: TAlrtTh (002h) if nNVCfg1.enAT is set.

Alternate Initial Value: 0x7F80 (Disabled)

The nTAlrtTh register shown in Table 109 sets upper and lower limits that generate an ALRT1 pin interrupt if exceeded by the Temp register value. The upper 8 bits set the maximum value and the lower 8 bits set the minimum value. Interrupt threshold limits are stored in 2's-complement format with 1ºC resolution over the full operating range of the Temp register. At power-up, the thresholds default to their maximum settings unless they are configured to be restored from nonvolatile memory instead by setting the nNVCfg1.enAT bit.

Table 109. TAlrtTh (002h)/nTAlrtTh (18Dh) Register Format

D15	D14	D13	D12	D11	D10	D9	D8	D7	D6	D5	D4	D3	D2	D1	D0
TMAX								TMIN							

TMAX: Maximum temperature reading. An alert is generated if the Temp register reading exceeds this value. This field is signed 2's complement format with 1ºC LSb resolution.

TMIN: Minimum temperature reading. An alert is generated if the Temp register reading falls below this value. This field is signed 2's complement format with 1ºC LSb resolution.

nSAlrtTh Register (18Fh)

Register Type: Special

Nonvolatile Restore: SAlrtTh (003h) if nNVCfg1.enAT is set.

Alternate Initial Value: 0xFF00 (Disabled)

The nSAlrtTh register shown in Table 110 sets upper and lower limits that generate an ALRT1 pin interrupt if exceeded by the selected RepSOC, AvSOC, MixSOC, or VFSOC register values. See the MiscCFG.SACFG setting for details.The upper 8 bits set the maximum value and the lower 8 bits set the minimum value. Interrupt threshold limits are selectable with 1% resolution over the full operating range of the selected SOC register. At power-up, the thresholds default to their maximum settings unless they are configured to be restored from nonvolatile memory instead by setting the nNVCfg1.enAT bit.

Table 110. SAlrtTh (003h)/nSAlrtTh (18Fh) Register Format

D15	D14	D13	D12	D11	D10	D9	D8	D7	D6	D5	D4	D3	D2	D1	D0
SMAX								SMIN							

SMAX: Maximum state-of-charge reading. An alert is generated if the selected SOC register reading exceeds this value. This field has 1% LSb resolution.

SMIN: Minimum state-of-charge reading. An alert is generated if the selected SOC register reading falls below this value. This field has 1% LSb resolution.

nIAlrtTh Register (0ACh)

Register Type: Special

Nonvolatile Restore: IAlrtTh (0ACh) if nNVCfg1.enAT is set.

Alternate Initial Value: 0x7F80 (Disabled)

The nIAlrtTh register shown in Table 111 sets upper and lower limits that generate an ALRT1 pin interrupt if exceeded by the Current register value. The upper 8 bits set the maximum value and the lower 8 bits set the minimum vaue. Interrupt threshold limits are selectable with 400µV resolution over the full operating range of the Current register. At power-up, the thresholds default to their maximum settings unless they are configured to be restored from nonvolatile memory instead by setting the nNVCfg1.enAT bit.

Table 111. IAlrtTh (0ACh)/nIAlrtTh (18Eh) Register Format

D15	D14	D13	D12	D11	D10	D9	D8	D7	D6	D5	D4	D3	D2	D1	D0
CURRMAX								CURRMIN							

CURRMAX: Maximum Current Threshold. An alert is generated if the current register reading exceeds this value. This field is signed 2's complement with 400µV LSb resolution to match the upper byte of the Current register.

CURRMIN: Minimum Current Threshold. An alert is generated if the current register reading falls below this value. This field is signed 2's complement with 400µV LSb resolution to match the upper byte of the Current register.

Smart Battery Compliant Operation

The MAX17300-MAX17303 is compliant to the Smart Battery Specification v1.1 when nNVCfg0.enSBS = 1. Enabling SBS operation does not interfere with normal operation of the IC. SBS formatted registers are accessed at slave address

16h, memory addresses 100h to 17Fh using SBS protocols. SBS functionality can be configured using the nSBSCfg and nDesignVoltage registers.

SBS Compliant Memory Space (MAX17301-MAX17303 Only)

The MAX17300-MAX17303 contains an SBS v1.1 Compliant memory space on pages 10h to 17h that can be accessed using the Read Word, Write Word, and Read Block commands at 2-Wire slave address 16h. Table 112 lists the SBS compliant registers. Refer to the SBS 1.1 Specification for details of registers at addresses 100h to 12Fh. Registers marked with Note 3 in the table are shared between SBS and normal IC functions and are always readable regardless of IC settings. Their format is described in the *Analog Measurements* section of the data sheet. All other registers on pages 13h to 17h are described in this section. Greyed locations are reserved and should not be written to.

Table 112. SBS Register Space Memory Map

PAGE/ WORD	10xH	11xH	12xH	13xH	14xH	15xH	16xH	17xH
0h	sManfctAccess	sFullCap	sManfctrName[1]	—	—	—	—	sManfctInfo[2]
1h	sRemCapAlarm	sRunTTE	sDeviceName[1]	—	—	—	—	—
2h	sRemTimeAlarm	sAvgTTE	sDevChemistry[1]	—	—	—	—	—
3h	sBatteryMode	sAvgTTF	sManfctData[2]	—	—	—	—	—
4h	sAtRate	sChargingCurrent	—	Temp1[3]	—	—	—	—
5h	—	sChargingVoltage	—	IntTemp[3]	—	—	—	—
6h	sAtTTE	sBatteryStatus	—	sFirstUsed	—	—	—	—
7h	sAtRateOK	sCycles	—	AvgTemp1[3]	—	—	sAvCap	—
8h	sTemperature	sDesignCap	—	AvgIntTemp[3]	—	—	sMixCap	—
9h	sPackVoltage	sDesignVolt	—	—	—	—	—	—
Ah	sCurrent	sSpecInfo	—	—	—	—	—	—
Bh	sAvgCurrent	sManfctDate	—	—	—	—	—	—
Ch	sMaxError	sSerialNumber[2]	—	—	—	—	—	—
Dh	sRelSOC	—					—	—
Eh	sAbsSOC	—	—	—	—	—	—	—
Fh	sRemCap	—	—	sCell1	sAvgCell1	—	—	—

1. Location is read as ASCII data using the Read Block command.

2. Location is read as Hexadecimal data using the Read Block command.

3. Location is shared between SBS and normal IC functions and is always readable regardless of IC settings.

sRemCapAlarm/sRemTimeAlarm Registers (101h/102h)

Register Type: Capacity/Time

Nonvolatile Restore: None

sRemCapAlarm: sRemCapAlarm defaults to DesignCap/10 at startup.

sRemTimeAlarm: sRemTimeAlarm defaults to 10min at startup.

At-Rate Functionality

sAtRate Register (104h)

Register Type: Current

Nonvolatile Backup: None

Host software should write the sAtRate register with a negative two's-complement 16-bit value of a theoretical load current prior to reading any of the at-rate output registers. AtRate calculations are performed using sAtRate (0x104) if

enSBS = 1, or AtRate(0x004) if enSBS = 0.

sAtTTF Register (105h)

Register Type: Time

Nonvolatile Backup: None

The sAtTTF register can be used to estimate time to full for any theoretical current load entered into the sAtRate register. AtRate calculations are performed using either sAtRate (0x104) if enSBS = 1, or AtRate(0x004) if enSBS = 0.

sAtTTE Register (105h)

Register Type: Time

Nonvolatile Backup: None

The sAtTTE register can be used to estimate time-to-empty for any theoretical current load entered into the sAtRate register. The AtTTE register displays the estimated time-to-empty for the application by dividing AtAvCap by the sAtRate register value. sAtTTE is translated from AtTTE for conversion into minutes. AtRate calculations are performed using either sAtRate (0x104) if enSBS = 1, or AtRate(0x004) if enSBS = 0.

sAtRateOK Register (107h)

Register Type: Special

Nonvolatile Restore: None

From SBS spec AtRateOK:

Description:

Returns a Boolean value that indicates whether or not the battery can deliver the previously written AtRate value of additional energy for 10 seconds (Boolean). If the AtRate value is zero or positive, the AtRateOK function ALWAYS returns true. Result may depend on the setting of CAPACITY_MODE bit.

Purpose:
The AtRateOK function is part of a two-function call-set used by power management systems to determine if the battery can safely supply enough energy for an additional load. It is used immediately after the SMBus host sets the AtRate value. Refer to AtRate for additional usage information.

sTemperature Register (108h)

Register Type: Temperature

Nonvolatile Restore: None

Temperature is translated from AvgTA register.

sPackVoltage Register (109h)

Register Type: Voltage

Nonvolatile Restore: None

Voltage is translated from sCELL1.

sChargingCurrent Register (114h)

Register Type: Current

Nonvolatile Restore: None

As for the SBS, this register returns the smart battery's desired charging rate in mA.

sDesignVolt Register (119h)

Register Type: Voltage

Nonvolatile Restore: None

sDesignVolt is represented per cell.

sSpecInfo Register (11Ah)

Register Type: Special

Nonvolatile Backup: None

Table 113. SpecInfo (11Ah) Format

D15	D14	D13	D12	D11	D10	D9	D8	D7	D6	D5	D4	D3	D2	D1	D0
0	0	0	0	0	0	0	0	0	0	1	1 (PEC)	0	0	0	1

PEC: PEC indicates whether the pack is configured to support SMBus PEC correction. PEC is always enabled on the MAX17300-MAX17303 in SBS Mode.

sSerialNumber Register (11Ch to 11Eh)

Register Type: Special

Nonvolatile Restore: None

SerialNumber indicates the 16-bit serial number as stored in nSerialNumber MTP. SerialNumber2 and 3 provide extended data for the serial number as stored in nSerialNumber2 and nSerialNumber3. By using 6-bytes total, a serial number can provide a very unique ID for 281 trillion devices. A 4-byte serial number can support 4.3 billion devices. Some of the bits can be fixed to indicate platform or other information.

sManfctrName Register (120h)

Register Type: Special

Nonvolatile Restore: nManfctrName

A block SMBus/I^2C read of 0x20 on I^2C slave 0x16 (SBS) reports RAM addresses 0x120 sequenced with 0x146-0x14A, for a total of 6-words of data. The first byte indicates the byte length and the following bytes are ASCII characters representing the brand name of the pack. This data is taken from nManfctrName MTP, except that the byte count is set by firmware instead of saved in MTP.

sDeviceName Register (121h)

Register Type: Special

Nonvolatile Restore: nDeviceName

A block SMBus/I^2C read of 0x21 on I^2C slave 0x16 (SBS) reports RAM addresses 0x121 sequenced with 0x140 to 0x143, for a total of 5-words of data. The first byte indicates the byte length and the following bytes are ASCII characters representing the device name. This data is taken from nDeviceName MTP, except that the byte-count is set by firmware instead of saved in MTP.

sDevChemistry Register (122h)

Register Type: Special

Nonvolatile Restore: None

A block SMBus/I^2C read of 0x22 on I^2C slave 0x16 (SBS) reports RAM addresses 0x122 sequenced with 0x156 to 0x158, for a total of 4-words of data. The first byte indicates the byte length and the following bytes are ASCII characters representing the device chemistry. For the MAX1730x/MAX1731x this string is always “LION”, which is standard for all SBS packs.

sManfctData Registers (123h to 12Fh)

Register Type: Various

Nonvolatile Restore: None

The bytes of this read-block command are defined as follows:

Byte 0: Cell count. Copy from NCELLS information.

Byte 1: High-Byte of eep_MEM_VER

Byte 2: Low-byte of eep_MEM_VER

Byte 3: High-Byte of Version

Byte 4: Low-Byte of Version

Byte 5: HCONFIG

Byte 6: HCONFIG2

Byte 7: Q

Byte 8: QH

sFirstUsed Register (136h)

This register contains a mirror of the value stored in nonvolatile memory address 1D7h.

sCell1 Register (13Fh)

This register contains the same cell voltage information displayed in Cell1 (0D8h) respectively with SBS compliant formatting. 1 LSb = 1mV giving a full scale range of 0.0V to 65.535V.

sAvgCell1 Register (14Fh)

This register contains the same average cell voltage information displayed in AvgCell1 (0D4h) with SBS compliant formatting. 1 LSb = 1mV giving a full scale range of 0.0V to 65.535V.

sAvCap Register (167h)

This register contains the same information as the AvCap (01Fh) register. It is formatted for SBS compliance where 1 LSb = 1.0mAh giving a full scale range of 0.0mAh to 65535mAh.

sMixCap Register (168h)

This register contains the same information as the MixCap (00Fh) register. It is formatted for SBS compliance where 1 LSb = 1.0mAh giving a full scale range of 0.0mAh to 65535mAh.

sManfctInfo Register (170h)

The sManfctInfo register is accessed using the SBS protocol read block command. This register function is not supported in the MAX1730x/MAX1731x.

Nonvolatile SBS Register Back-Up

When SBS mode operation is enabled by setting nNVCfg0.enSBS = 1, data from several nonvolatile memory locations is translated into SBS memory space. Table 114 lists these translations. Note that when performing an SBS Read Block command, the IC automatically generates the size data byte by counting the number of sequential non-zero data bytes stored in the corresponding nonvolatile memory locations. The nonvolatile memory only needs to store the actual data to be read by an SBS Read Block command. If SBS mode of operation is disabled, these locations become available for general purpose nonvolatile data storage.

Table 114. SBS to Nonvolatile Memory Mapping

NONVOLATILE MEMORY ADDRESS	NONVOLATILE MEMORY REGISTER NAME	SBS MEMORY ADDRESS	S REGISTER NAME
1D6h	nManfctrDate	1Bh	sManfctrDate
1D7h	nFirstUsed	36h	sFirstUsed
1CCh-1CEh	nManfctrName[2:0]	20h (Read Block Command)	sManfctrName
1D8h-1DAh	nSerialNumber[2:0]	1Ch (Read Block Command)	sSerialNumber
1DBh-1DFh	nDeviceName[4:0]	21h (Read Block Command)	sDeviceName

nSBSCfg Register (1B4h)

Register Type: Special

Nonvolatile Restore: There is no associated restore location for this register.

The nSBSCfg register manages settings for SBS mode operation of the IC. If nNVCfg0.enSBS = 0 and SBS mode is not used, this register can be used as general purpose data storage. Table 115 shows the register format.

Table 115. nSBSCfg Register (1B4h) Format

D15	D14	D13	D12	D11	D10	D9	D8	D7	D6	D5	D4	D3	D2	D1	D0
CapMd	X	X	X	X	X	X	X	X	X	X	X	X	MECfg		X

X: Don't Care. This bit is undefined and can be logic 0 or 1.

MECfg: Configures sMaxError register output when operating in SBS mode.

00: Always report 0% error

01: Always report 1% error

10: Report actual experienced error

11: Always report 3% error

CapMd: Selects sBatteryMode.CapMd bit default setting when operating in SBS mode. CapMd resets to 0 every time a pack removal occurs as detected by floating communication lines.

nCGain and Sense Resistor Relationship

To meet SBS compliance, current and capacity registers in the SBS memory space must have an LSb bit weight of 1.0mA or 1.0mAh. The current gain must be adjusted based on the application sense resistor value to set the proper bit weight. Table 116 shows the proper nCGain value to use for the most common sense resistor values. This is the default register value only. It does not include any offset trim or custom gain adjustment. Note that changing the nCGain register affects the gain reported by the standard ModelGauge current and capacity registers.

Table 116. nCGain Register Settings to Meet SBS Compliance

SENSE RESISTOR VALUE (Ω)	NCGAIN REGISTER VALUE	CORRESPONDING CGAIN REGISTER VALUE
0.0025	0x4000	0x0400
0.005	0x2000	0x0200
0.010	0x1000	0x0100

Dynamic Battery Power Technology (DBPT) Registers

Many mobile systems with high-performance CPUs, GPUs, motors, radios, etc., require the battery to deliver short pulses of high power without the battery voltage falling below critical system undervoltage levels. Managing these pulse loads optimally without sacrificing performance is quite challenging without appropriate battery capability information being available to the system.

To achieve better run-time and to help the system run at optimal performance, Analog Devices has developed Dynamic Battery Power Technology (DBPT). MAX1730x/MAX1731x supports this DBPT feature, which provides the on-demand battery capability to be used for managing pulse-loads. To support these high pulses without the battery voltage falling below critical system under-voltage levels, the MAX1730x/MAX1731x indicates the instantaneous peak and sustained power levels that can be extracted safely from the battery. The system can use this information to set its maximum current in accordance with battery power capability. For example, in many 1-cell applications, the system requires at least 3.3V to operate correctly. By configuring the MAX1730x/MAX1731x for DBPT, the system's loads can be controlled or limited to stay within the battery's capability and ensure that a minimum system voltage (MinSysVolt) is not crossed until the battery is a very low state.

The implementation of DBPT in the MAX1730x/MAX1731x hews closely to Intel's Dynamic Battery Power Technology v2.0 standard and relies on specific functions and corresponding registers. This section defines those functions. The implementation in the MAX1730x/MAX1731x includes all the same registers as the Intel spec. However, the MAX1730x/MAX1731x register set uses different LSBs and addresses from the Intel standard.

The following registers are used for DBPT. The units of the DBPT registers are not SBS compatible. The MAX1730x/MAX1731x uses an LSB of 1mV for voltage, 1mA for current, 10mW for power, and 1mΩ for resistance.

Additionally, although SMBus is used as the underlying physical layer for these new functions, the functions are available with the Maxim 1-Wire or 2-Wire (I^2C) Interface.

MaxPeakPower Register (0A4h)

Specification Description:

The fuel gauge computes and return the maximum instantaneous peak output power of the battery pack in cW, which is available for up to 10ms, given the external resistance and required minimum voltage of the voltage regulator. The MaxPeakPower value is expected to be negative and has to be updated at least once every second. MaxPeakPower is initialized to the present value of MaxPeakPower on reset or power-up.

Internal configuration of the fuel gauge should allow the maximum value of this parameter to be configured which account for various system limitations, such as limiting the cell discharge current to the 4C rate, and allowing for the safe operating area specifications for devices in the power path, such as MOSFETs. It is suggested that these parameters be user definable.

LSB is 10mW.

Actual Calculation:

MaxPeakPower = MPPCurrent x AvgVCell

SusPeakPower Register (0A5h)

Specification Description:

The fuel gauge computes and returns the sustained peak output power of the battery pack in cW, which is available for up to 10s, given the external resistance and required minimum voltage of the voltage regulator. The SusPeakPower value is expected to be negative and has to be updated at least once every second. SusPeakPower is initialized to the present value of SusPeakPower on reset or power-up.

Internal configuration of the fuel gauge should allow the maximum value of this parameter to be configured which accounts for various system limitations, such as limiting the cell discharge current to the 2C rate, and allowing for the safe operating area specifications for devices in the power path, such as MOSFETs. It is suggested that these parameters be user definable.

LSB is 10mW.

Actual Calculation:

SusPeakPower = SPPCurrent x AvgVCell

sPackResistance (0A6h) and nPackResistance (1C5h)

Specification Description:

This function reports the total noncell pack resistance value to account for the resistances due to cell interconnect, sense resistor, FET, fuse, connector, and other impedances between the cells and output of the battery pack. The cell internal resistance should NOT be included. PackResistance is set at time of pack manufacture. Writes to this value has no change to the value during normal operation. This value is usually determined by the battery pack manufacturer and set at time of pack manufacture.

The pack-maker can configure PackResistance by programming the nonvolatile nPackResistance during production.

LSB of 1mΩ per LSB.

SysResistance (0A7h)

Specification Description:

This function is to write the total resistance value into fuel gauge to account for the resistances due to the resistance of power/ground metal, sense resistor, FET, and other parasitic resistance on the system main board. SysResistance is initialized to a default value upon removal or insertion of a battery pack. Writes with this function overwrites the default value. The system designer is expected to overwrite the default value with the value from the system in question. This allows a single pack to be used in multiple systems which may have various values for SysResistance.

1mΩ per LSB.

sMPPCurrent (0A9h)

Specification Description:

The fuel gauge computes and returns the maximum instantaneous peak current of the battery pack in mA, which is available for up to 10ms, given the external resistance and required minimum voltage of the voltage regulator. The MPPCurrent value is expected to be negative and has to be updated at least once every second. MPPCurrent is initialized to the present value of MPPCurrent on reset or power-up.

Actual Calculation:

MPPCurrent = (AvgVCell - MinSySVoltage)/[(PackResistance + SysResistance) x Rgain1]

SPPCurrent (0AAh)

Specification Description:

The fuel gauge computes and returns the sustained peak current of the battery pack in mA, which is available for up to 10s, given the external resistance and required minimum voltage of the voltage regulator. The SPPCurrent value is expected to be negative and has to be updated at least once every second. SPPCurrent is initialized to the present value of SPPCurrent on reset or power-up.

Actual Calculation:

SPPCurrent = (AvgVCell - MinSySVoltage)/(RCell x Rgain2)

nDPLimit Register (1E0h)

Register Type: Special

Initial Value: 0x8040

The nDPLimit register sets the safety limits for Dynamic Power Max-Peak Power and Max-Sustained Power. Table 117 shows the register format.

Table 117. nDPLimit (1E0h) Format

D15	D14	D13	D12	D11	D10	D9	D8	D7	D6	D5	D4	D3	D2	D1	D0
MPPLimit								SPPLimit							

Both MPPLimit and SPPLimit are expressed as positive unsigned numbers, although they're used to limit negative discharge currents.

MPPLimit: MPPCurrent C-Rate Limit. 0x20 is the setting for 1C current limit. The LSB is C/32 for a range from 0C to 7.97C.

SPPLimit: SPPCurrent C-Rate Limit. 0x40 is the setting for 1C current limit. The LSB is C/64 for a range from 0C to 3.98C.

Be sure to set MPPLimit and SPPLimit to be under the ADC range for current measurements.

SHA-256 Authentication

The MAX17300/01/02/10/11/12 supports authentication which is performed using a FIPS 180-4 compliant SHA-256 one-way hash algorithm on a 512-bit message block. The message block consists of a 160-bit secret, a 160-bit challenge, and 192 bits of constant data. Optionally, the 64-bit ROM ID replaces 64 of the 192 bits of constant data used in the hash operation. Contact Analog Devices for details of the message block organization.

The host and the IC both calculate the result based on the mutually known secret. The result of the hash operation is known as the message authentication code (MAC) or message digest. The MAC is returned by the IC for comparison to the host's MAC. Note that the secret is never transmitted on the bus and thus cannot be captured by observing bus traffic. Each authentication attempt is initiated by the host system by writing a 160-bit random challenge into the SHA memory address space 0C0h to 0C9h. The host then issues the compute MAC or compute MAC with ROM ID command. The MAC is computed per FIPS 180-4 and stored in address space 0C0h to 0CFh overwriting the challenge value.

The MAX17301/MAX17302/MAX17311/MAX17312 introduces the new MAC key derivation function (MKDF), a 2-stage authentication scheme that utilizes an intermediate secret for an added layer of security.

Note that the results of the authentication attempt are determined by host verification. Operation of the IC is not affected by authentication success or failure.

Authentication Procedure

Figure 28 shows how a host system verifies the authenticity of a connected battery. The host first generates a random 160-bit challenge value and writes the challenge to IC memory space 0C0h to 0C9h. The host then sends the Compute MAC with ROM ID (3500h) or Compute MAC without ROM ID (3600h) to the Command register 060h and wait t_{SHA} for computation to complete. Finally, the host reads the MAC from memory space 0C0h to 0CFh to verify the result. This procedure requires the secret to be maintained on the host side as well as in the battery. The host must perform the same calculations in parallel to verify the battery is authentic.

Procedure to Verify a Battery

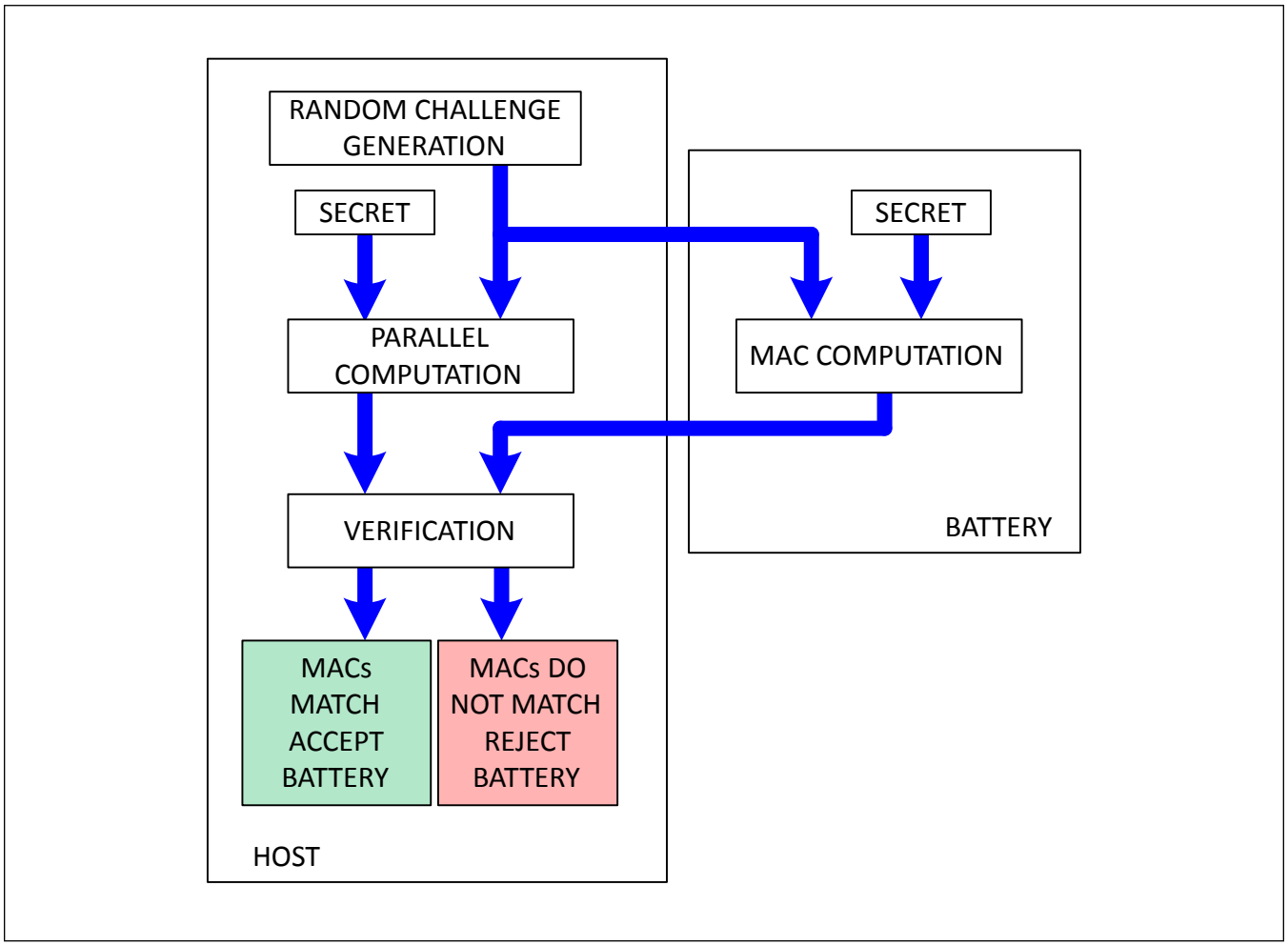

Figure 28. Procedure to Verify a Battery

Alternate Authentication Procedure

Figure 29 shows an alternative method of battery authentication which does not require the host to know the secret. In this method, each host device knows a challenge and MAC pair that matches the secret stored in an authentic battery, but each host device uses a different pair. This eliminates the need for special hardware on the host side to protect the secret from hardware intrusion. A battery could be cloned for a single host device, but creating a clone battery that works with any host would not be possible without knowing the secret.

The authentication process for this method is less complex. The host simply writes the challenge to IC memory space 0C0h to 0C9h. The host then sends the Compute MAC without ROM ID (3600h) to the Command register 060h. Note that Compute MAC with ROM ID Command is not valid for this authentication method. The host then waits t_{SHA} for computation to complete and reads the MAC from memory space 0C0h to 0CFh to verify the result.

Battery Authentication without a Host Side Secret

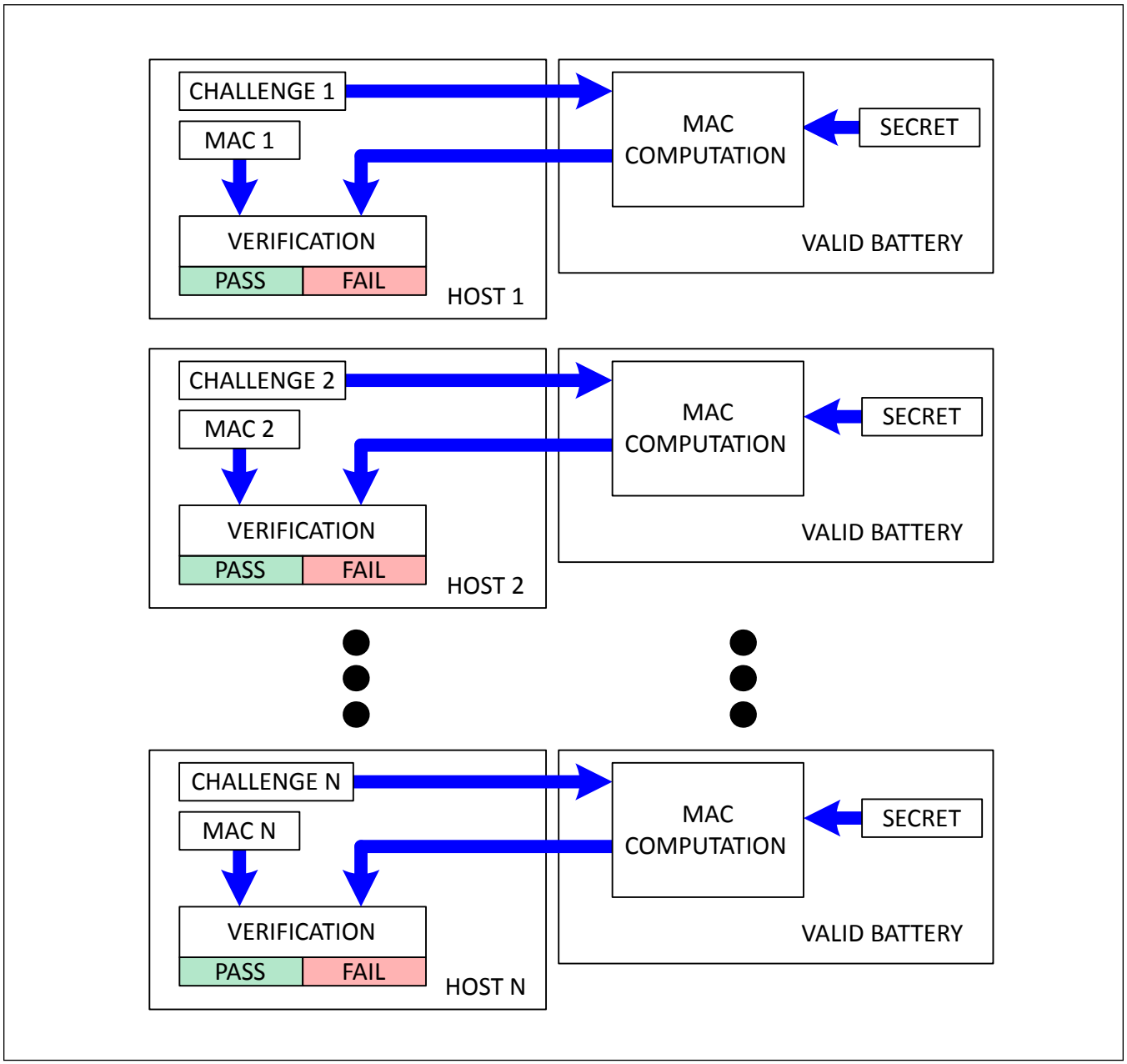

Figure 29. Battery Authentication without a Host Side Secret

Secret Management

The secret value must be programmed to a known value prior to performing authentication in the application. The secret cannot be written directly. Instead, the user must generate a new internal secret by performing a SHA computation with the old internal secret and a seed value sent as a challenge. To prevent any one entity from knowing the complete secret value, the process can be repeated multiple times by sending additional challenge seeds and performing additional computations.

Note that secret memory can only be changed a maximum of n_{SECRET} times including erase operations and nonvolatile memory updates are not guaranteed. See the n_{SECRET} write limit in the Electrical Characteristics table. Any secret update operation that fails does not change the secret value stored in the IC, but consumes one of the available limited updates. Be careful not to use up all secret memory during the generation process. Analog Devices strongly recommends permanently locking the secret after it has been generated.

Single Step Secret Generation

The single step secret generation procedure should be used in production environments where the challenge seed value can be kept confidential, for example, when there are no OEM manufacturing steps or situations where an outside individual or organization would need to know the challenge seed. Use the following sequence to program the IC. Since the secret cannot be read from the IC, a parallel computation must be performed externally in order to calculate the stored secret. Figure 30 shows an example single step secret generation operation. Note that new units have their secret value already cleared to all 0s.

1. Clear the CommStat.NVError bit.
2. Write a challenge seed value to the SHA memory space 0C0h to 0C9h.
3. Write Compute Next Secret with ROM ID 3300h or Compute Next Secret without ROM ID 3000h to the Command register 060h.
4. Wait t_{SHA} + t_{UPDATE} for computation to complete and new secret to be stored.
5. If CommStat.NVError is set, return to step 1, otherwise, continue.
6. Verify the secret has been generated correctly with a test challenge at this time. If verification fails, return to step 1. See the *Determining Number of Remaining Updates* section to verify enough nonvolatile memory writes remain in order to repeat the process.
7. Write Lock Secret 6000h to the Command register 060h. **Note this operation cannot be reversed.**
8. Wait t_{UPDATE} for secret to lock permanently.

Single Step Secret Generation Example

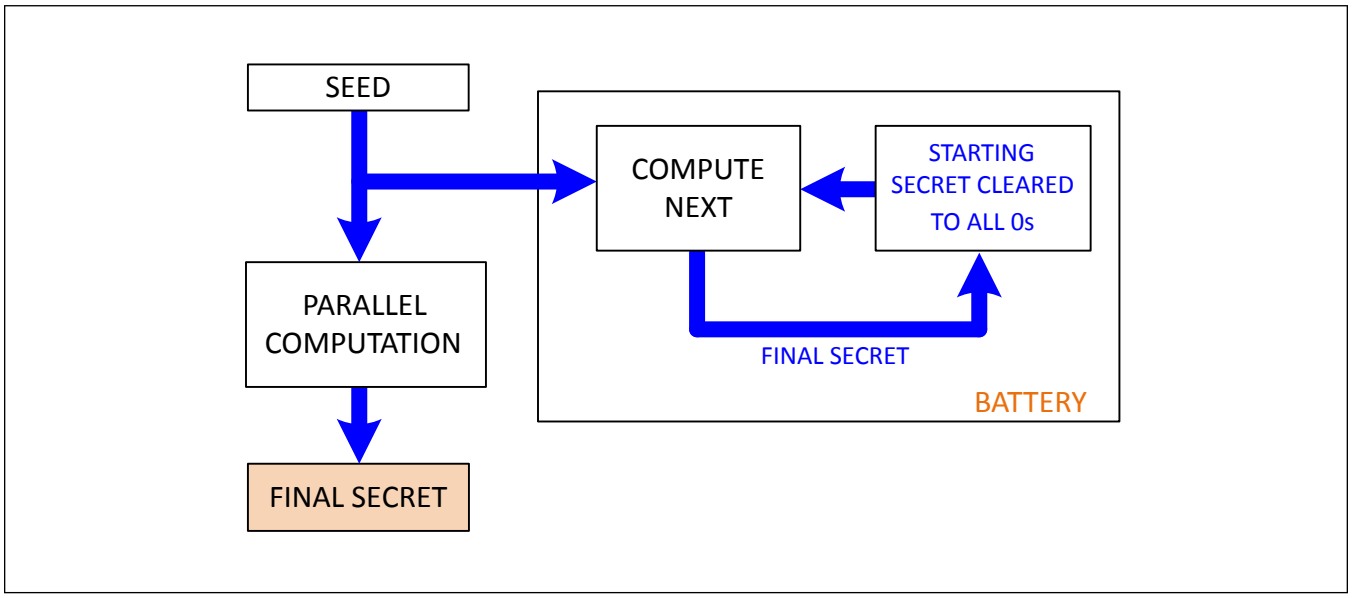

Figure 30. Single Step Secret Generation Example

Multistep Secret Generation Procedure

The multistep secret generation procedure should be used in environments where an outside individual or organization would need to know the challenge seed such as OEM manufacturing. The multistep procedure is more complicated but allows a secret to be stored inside the IC without providing any information to an OEM manufacturer that could jeopardize secret integrity. Figure 31 shows an example where three OEM manufacturers are each provided with a seed value for a Compute Next operation. The final secret value stored inside the IC are known only to the top level manager who knows all seed values and has performed the computation separately. Use the following procedures when generating a multi-step secret. Note that the secret can only be updated or cleared n_{SECRET} times total. New units have their secret value already cleared to all 0s.

All OEMs:

1. Clear the CommStat.NVError bit.
2. Write challenge seed value to the SHA memory space 0C0h to 0C9h.
3. Write Compute Next Secret with ROM ID 3300h or Compute Next Secret without ROM ID 3000h to the Command register 060h.
4. Wait t_{SHA} + t_{UPDATE} for computation to complete and new secret to be stored.
5. If CommStat.NVError is set, return to step 1, otherwise, continue.
6. Verify the secret has been generated correctly with a test challenge at this time. If verification fails, return to step 1. See the *Determining Number of Remaining Updates* section to verify enough nonvolatile memory writes remain in order to repeat the process.

Last OEM:

1. Follow the procedure above for the final secret update.
2. Write Lock Secret 6000h to the Command register 060h. **Note this operation cannot be reversed.**
3. Wait t_{UPDATE} for secret to lock permanently.

Top Level:

1. Generate all seed values to provide to OEMs.
2. Perform SHA calculations seperately to determine what the final secret is after all manufacturing steps.
3. Keep final secret value secure.

Multistep Secret Generation Example

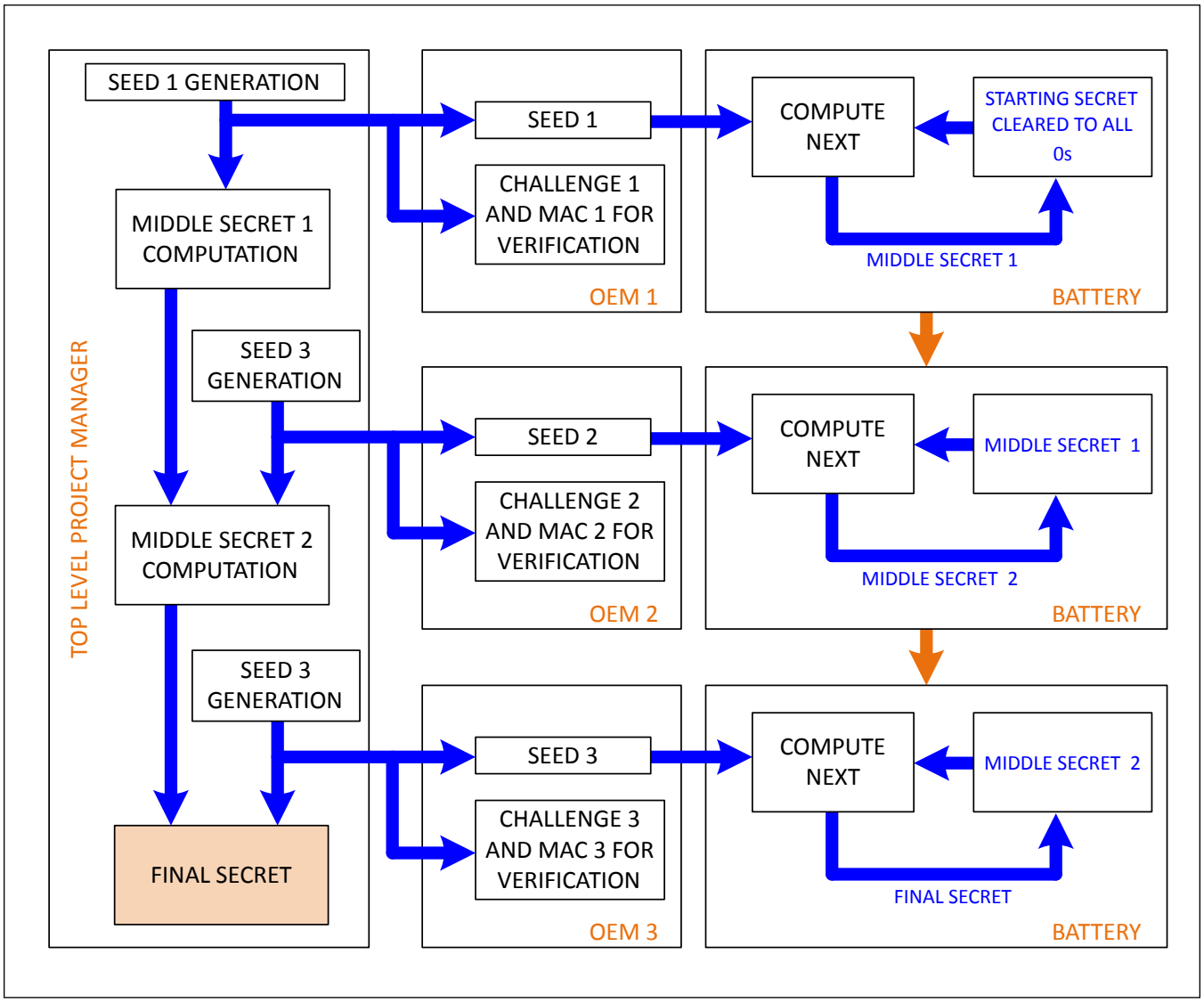

Figure 31. Multistep Secret Generation Example

2-Stage MKDF Authentication Scheme

The MAX17300/01/02/10/11/12 introduces the new 2-stage MKDF authentication scheme that utilizes an intermediate secret for an added layer of security. Figure 32 illustrates how to create a unique intermediate secret that can be stored in the host at the factory. Figure 33 outlines the procedure to complete the 2-stage authentication.

The following procedure implements the MKDF authentication scheme:

1. Write Copy Intermediate Secret from NVM command 3800h to the Command register 060h.
2. Write unique challenge seed value to the SHA memory space 0C0h to 0C9h to be used to compute the next intermediate secret.
3. Write Compute Next Intermediate Secret with ROM ID 3900h or Compute Next Intermediate Secret without ROM ID 3A00h to the Command register 060h.
4. Wait t_{SHA} for computation to complete.

5. Write challenge seed value to the SHA memory space 0C0h to 0C9h to be used to compute MAC using the intermediate secret.
6. Write Compute MAC From Intermediate Secret with ROM ID 3D00h or Compute MAC From Intermediate Secret without ROM ID 3C00h to the Command register 060h.
7. Wait t_{SHA} for computation to complete.
8. Read the MAC from SHA memory space 0C0h to 0CFh to verify the result.

Because the intermediate secret is stored in the same RAM location used for SHA calculation, executing some commands overwrites the intermediate secret. The functional impact is summarized as follows:

- Compute MAC and Compute Next Secret commands overwrites the intermediate secret.
- Copy intermediate secret from NVM overwrites the intermediate secret (as expected).
- Compute MAC from intermediate secret also overwrites the intermediate secret. If an intermediate secret is used for multiple MAC calculations, the intermediate secret needs to be reconstructed after each MAC computation.

Create a Unique Intermediate Secret

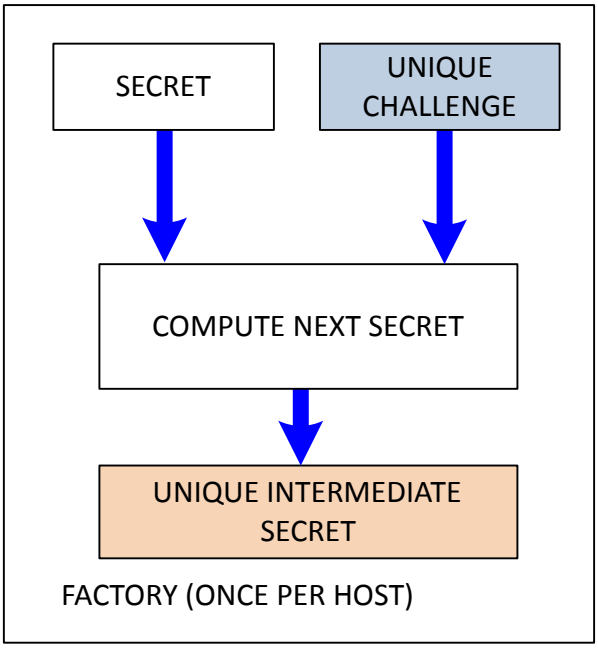

Figure 32. Create a Unique Intermediate Secret

Procedure for 2-Stage MKDF Authentication

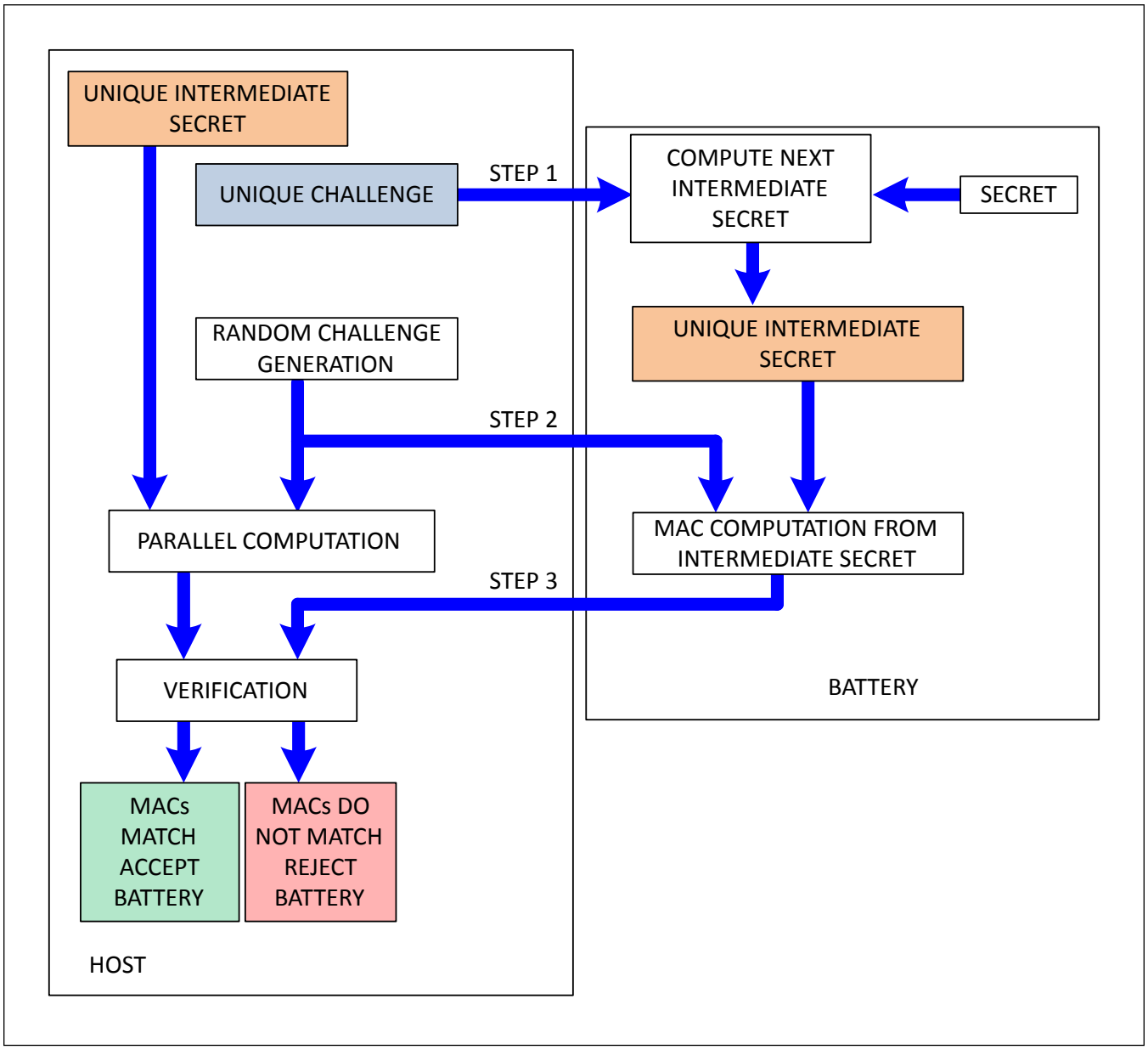

Figure 33. Procedure for 2-Stage MKDF Authentication

Determining Number of Remaining Updates

The internal secret can only be updated or cleared n_{SECRET} times total. The number of remaining updates can be calculated using the following procedure:

1. Write 0xE29D to the Command register (060h).
2. Wait t_{RECALL}.
3. Read memory address 1FDh.
4. Decode address 1FDh data as shown in Table 118. Each secret update has redundant indicator flags for reliability.

Logically OR the upper and lower bytes together then count the number of 1s to determine how many updates have already been used. The first update occurs in manufacturing test to clear the secret memory prior to shipping to the user.

Table 118. Number of Remaining Secret Updates

ADDRESS 0E6H DATA	LOGICAL OR OF UPPER AND LOWER BYTES	NUMBER OF UPDATES USED	NUMBER OF UPDATES REMAINING
0000000x00000001b or 000000010000000xb	00000001b	1	5
000000xx0000001xb or 0000001x000000xxb	00000011b	2	4
00000xxx000001xxb or 000001xx00000xxxb	00000111b	3	3
0000xxxx00001xxxb or 00001xxx0000xxxxb	00001111b	4	2
000xxxxx0001xxxxb or 0001xxxx000xxxxxb	00011111b	5	1
00xxxxxx001xxxxxb or 001xxxxx00xxxxxxb	00111111b	6	0

Authentication Commands

All SHA authentication commands are written to memory address 060h to perform the desired operation. Writing the Challenge or reading the MAC is handled by accessing the SHA memory space on page 0Ch through direct write and read operations.

COMPUTE MAC WITHOUT ROM ID [3600h]

The challenge value must be written to the SHA memory space prior to performing a Compute MAC. This command initiates a SHA-256 computation without including the ROM ID in the message block. Instead, the ROM ID portion of the message block is replaced with a value of all 1s. Since the ROM ID is not used, this command allows the use of a master secret and MAC response independent of the ROM ID. The IC computes the MAC in t_{SHA} after receiving the last bit of this command. After the MAC computation is complete, the host can read the MAC from the SHA memory space.

COMPUTE MAC WITH ROM ID [3500h]

The challenge value must be written to the SHA memory space prior to performing a Compute MAC. This command is structured the same as the compute MAC without ROM ID, except that the ROM ID is included in the message block. With the unique ROM ID included in the MAC computation, the MAC is unique to each unit. After the MAC computation is complete, the host can read the MAC from the SHA memory space.

COMPUTE NEXT SECRET WITHOUT ROM ID [3000h]

This command initiates a SHA-256 computation and uses the resulting MAC as the next or new secret. The hash operation is performed with the current 160-bit secret and the new 160-bit challenge. Logical 1s are loaded in place of the ROM ID. The last 160 bits of the MAC are used as the new secret value. The host must allow t_{SHA} after issuing this command for the SHA calculation to complete, then wait t_{UPDATE} for the new secret value to be stored in nonvolatile memory. During this operation, the SHA memory space is not updated. Note that the old secret value must be known prior to executing this command in order to calculate what the new secret value is.

COMPUTE NEXT SECRET WITH ROM ID [3300h]

This command initiates a SHA-256 computation and uses the resulting MAC as the next or new secret. The hash operation is performed with the current 160-bit secret, the 64-bit ROM ID, and the new 160-bit challenge. The last 160 bits of the output MAC are used as the new secret value. The host must allow t_{SHA} after issuing this command for the SHA calculation to complete, then wait t_{UPDATE} for the new secret value to be stored in nonvolatile memory. During this operation, the SHA memory space is not updated. Note that the old secret value must be known prior to executing this command in order to calculate what the new secret value is.

CLEAR SECRET [5A00h]

This command sets the 160-bit secret to all 0s. The host must wait t_{UPDATE} for the IC to write the new secret value to nonvolatile memory. This command uses up one of the secret write cycles.

LOCK SECRET [6000h]

This command write protects the secret to prevent accidental or malicious overwrite of the secret value. The secret value stored in nonvolatile memory becomes permanent. The host must wait t_{UPDATE} for the lock operation to complete.

SHA-256 Lock state is not shown in the Lock register. Lock state can be verified by reading nonvolatile memory history using the following sequence:

1. Send 0xE29B to the Command register (060h).
2. Wait for t_{RECALL}.
3. Read memory address 1FCh.

If address 1FCh is 0x0000, then the secret is not locked. If address 1FCh is anything other than 0x0000, then the secret is permanently locked.

COPY INTERMEDIATE SECRET FROM NVM [3800]

This command copies the secret from NVM and places it in RAM to allow the secret to be used by the other commands.

COMPUTE NEXT INTERMEDIATE SECRET WITH ROMID [3900]

This command is similar to COMPUTE NEXT SECRET WITH ROMID except the secret used in the computation comes from the previously executed COPY INTERMEDIATE SECRET FROM NVM or COMPUTE NEXT INTERMEDIATE SECRET WITH/WITHOUT ROMID and the next secret is placed in RAM so it can be used in subsequent commands.

COMPUTE NEXT INTERMEDIATE SECRET WITHOUT ROMID [3A00]

This command is similar to COMPUTE NEXT SECRET WITHOUT ROMID except the secret used in the computation comes from the previously executed COPY INTERMEDIATE SECRET FROM NVM or COMPUTE NEXT INTERMEDIATE SECRET WITH/WITHOUT ROMID and the next secret is placed in RAM so it can be used in subsequent commands.

COMPUTE MAC FROM INTERMEDIATE SECRET WITHOUT ROMID [3C00]

This command is the same as COMPUTE MAC WITHOUT ROMID except the secret used in the computation comes from the previously executed COPY INTERMEDIATE SECRET FROM NVM or COMPUTE NEXT INTERMEDIATE SECRET WITH/WITHOUT ROMID.

COMPUTE MAC FROM INTERMEDIATE SECRET WITH ROMID [3D00]

This command is the same as COMPUTE MAC WITH ROMID except the secret used in the computation comes from the previously executed COPY INTERMEDIATE SECRET FROM NVM or COMPUTE NEXT INTERMEDIATE SECRET WITH/WITHOUT ROMID.

Device Reset

There are two different levels of reset for the IC. A full reset restores the IC to its power-up state the same as if power had been cycled. A fuel-gauge reset resets only the fuel gauge operation without resetting IC hardware. This is useful for testing different configurations without writing nonvolatile memory. Use the following sequences to reset the IC.

FULL RESET

1. Reset IC hardware by writing 000Fh to the Command register at 060h.
2. Wait 10mS.
3. Reset IC fuel gauge operation by writing 8000h to the Config2 register at 0ABh. This command does not disturb the state of the protection FETs.
4. Wait for POR_CMD bit (bit 15) of the Config2 register to be cleared to indicate POR sequence is complete.

FUEL-GAUGE RESET

1. Reset IC fuel gauge operation by writing 8000h to the Config2 register at 0ABh. This command does not disturb the state of the protection FETs.
2. Wait for POR_CMD bit (bit 15) of the Config2 register to be cleared to indicate POR sequence is complete.

Reset Commands

There are two commands that can be used to reset either the entire IC or just the operation of the fuel gauge. Note that the reset fuel gauge command is written to Config2 instead of the Command register.

HARDWARE RESET [000Fh to address 060h]

Send the hardware reset command to the Command register to recall all nonvolatile memory into shadow RAM and reset all hardware based operations of the IC. This command should always be followed by the reset fuel gauge command to fully reset operation of the IC.

FUEL GAUGE RESET [8000h to address 0ABh]

The fuel-gauge reset command resets operation of the IC without restoring nonvolatile memory values into shadow RAM. This command allows different configurations to be tested without using one of the limited number of nonvolatile memory writes. This command does not disturb the state of the protection FETs.

Communication

This section covers communication protocols and summarizes all special commands used by the IC. The MAX17300-MAX17303 communicates over a 2-Wire interface using either I^2C or SBS protocols depending on memory address selected by the host. The MAX17310-MAX17313 communicates using the Maxim 1-Wire interface.

2-Wire Bus System

The MAX17300-MAX17303 uses a 2-Wire bus system to communicate by both standard I^2C protocol or by SBS smart battery protocol. The slave address used by the host to access the IC determines which protocol is used and what memory locations are available to read or write. The following description applies to both protocols. See the I^2C and SBS Bus System descriptions for specifc protocol details.

Hardware Configuration

The 2-Wire bus system supports operation as a slave-only device in a single or multi-slave, and single or multi-master system. Up to 128 slave devices may share the bus using 7-bit slave addresses. The 2-Wire interface consists of a serial data line (SDA) and serial clock line (SCL). SDA and SCL provide bidirectional communication between the IC and a master device at speeds up to 400kHz. The ICs SDA pin operates bidirectionally. When the IC receives data, SDA operates as an input. When the IC returns data, SDA operates as an open-drain output with the host system providing a resistive pullup. See Figure 34. The IC always operates as a slave device, receiving and transmitting data under the control of a master device. The master initiates all transactions on the bus and generates the SCL signal, as well as the START and STOP bits which begin and end each transaction.

2-Wire Bus Interface Circuitry

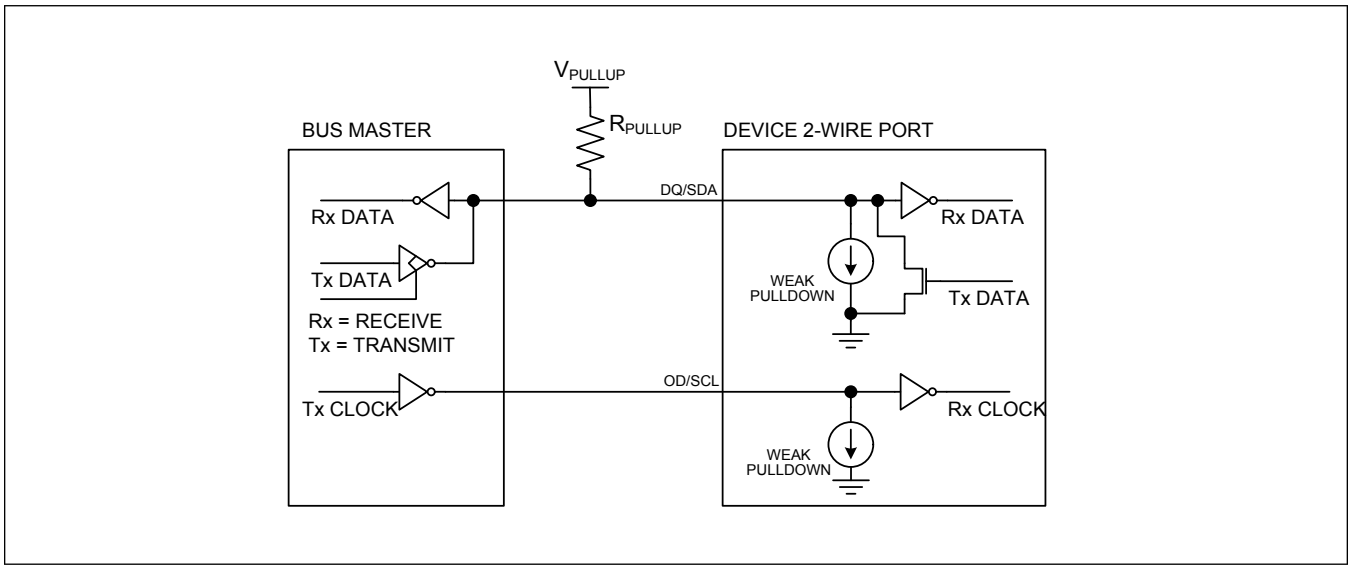

Figure 34. 2-Wire Bus Interface Circuitry

I/O Signaling

The following individual signals are used to build byte level 2-Wire communication sequences.

Bit Transfer

One data bit is transferred during each SCL clock cycle, with the cycle defined by SCL transitioning low to high and then high to low. The SDA logic level must remain stable during the high period of the SCL clock pulse. Any change in SDA when SCL is high is interpreted as a START or STOP control signal.

Bus Idle

The bus is defined to be idle, or not busy, when no master device has control. Both SDA and SCL remain high when the bus is idle. The STOP condition is the proper method to return the bus to the idle state.

START and STOP Conditions

The master initiates transactions with a START condition by forcing a high-to-low transition on SDA while SCL is high. The master terminates a transaction with a STOP condition by a low-to-high transition on SDA while SCL is high. A Repeated START condition can be used in place of a STOP then START sequence to terminate one transaction and begin another without returning the bus to the idle state. In multi-master systems, a Repeated START allows the master to retain control of the bus. The START and STOP conditions are the only bus activities in which the SDA transitions when SCL is high.

Acknowledge Bits

Each byte of a data transfer is acknowledged with an Acknowledge bit (ACK) or a No Acknowledge bit (NACK). Both the master and the IC slave generate acknowledge bits. To generate an Acknowledge, the receiving device must pull SDA low before the rising edge of the acknowledge-related clock pulse (ninth pulse) and keep it low until SCL returns low. To generate a No Acknowledge, the receiver releases SDA before the rising edge of the acknowledge-related clock pulse and leaves SDA high until SCL returns low. Monitoring the acknowledge bits allows for detection of unsuccessful data transfers. An unsuccessful data transfer can occur if a receiving device is busy or if a system fault has occurred. In the event of an unsuccessful data transfer, the bus master should reattempt communication. If a transaction is aborted mid-byte, the master should send additional clock pulses to force the slave IC to free the bus prior to restarting communication.

Data Order

With 2-Wire communication, a byte of data consists of 8 bits ordered most significant bit (MSb) first. The least significant bit (LSb) of each byte is followed by the Acknowledge bit. IC registers composed of multibyte values are ordered least significant byte (LSB) first.

Slave Address

A bus master initiates communication with a slave device by issuing a START condition followed by a Slave Address and the read/write (R/W) bit. When the bus is idle, the IC continuously monitors for a START condition followed by its slave address. When the IC receives a slave address that matches its Slave Address, it responds with an Acknowledge bit during the clock period following the R/W bit. The MAX17300-MAX17303 supports the slave addresses shown in Table 119.

Table 119. 2-Wire Slave Addresses

SLAVE ADDRESS	PROTOCOL	ADDRESS BYTE RANGE	INTERNAL MEMORY RANGE ACCESSED
6Ch	I^2C	00h-FFh	000h-0FFh
16h	SMBUS	00h-7Fh	100h-17Fh
	I^2C	80h-FFh	180h-1FFh

Read/Write Bit

The R/W bit following the slave address determines the data direction of subsequent bytes in the transfer. R/W = 0 selects a write transaction, with the following bytes being written by the master to the slave. R/W = 1 selects a read transaction, with the following bytes being read from the slave by the master.

Bus Timing

The IC is compatible with any bus timing up to 400kHz. See the Electrical Characteristics table for timing details. No special configuration is required to operate at any speed. Figure 35 shows an example of standard 2-Wire bus timing.

2-Wire Bus Timing Diagram

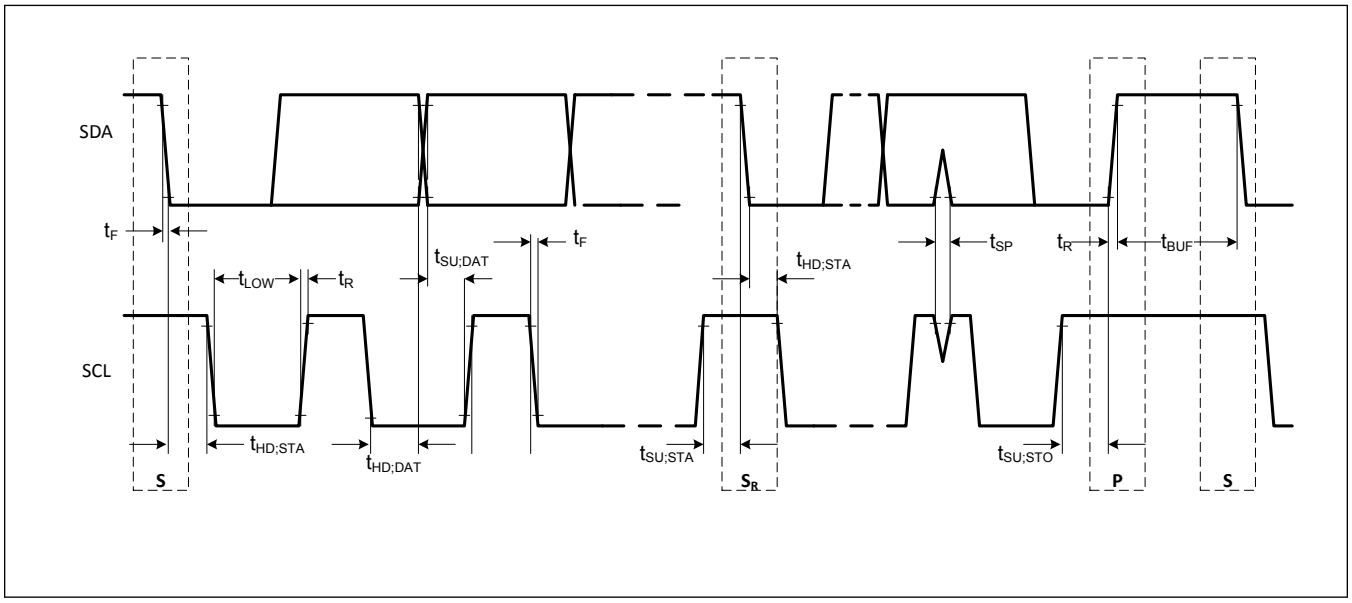

Figure 35. 2-Wire Bus Timing Diagram

I²C Protocols

The following 2-Wire communication protocols must be used by the bus master to access MAX17300-MAX17303 memory locations 000h to 1FFh. Addresses 000h to 0FFh and from 180h to 1FFh can be read continuously. Addresses 100h to 17Fh must be read one word at a time. These protocols follow the standard I²C specification for communication.

I²C Write Data Protocol

The Write Data protocol is used to transmit data to the IC at memory addresses from 000h to 1FFh. Addresses 000h to 0FFh and 180h and 1FFh can be written as a block. Addesses 100h to 17Fh must be written one word at a time. The memory address is sent by the bus master as a single byte value immediately after the slave address, followed by an ACK from the IC. The LSB of the data to be stored is written immediately after the memory address byte, followed by an ACK from the IC. The MSB of the data to be stored is written next, followed by an ACK from the IC. Because the address is automatically incremented after the least significant bit (LSb) of the MSB of each word received by the IC, the LSB of the data at the next memory address can be written immediately after the acknowledgment of the MSB of data at the previous address. The master indicates the end of a write transaction by sending a STOP or Repeated START after receiving the last acknowledge bit. If the bus master continues an auto-incremented write transaction beyond address 0FFh or 1FFh, the IC ignores the data. Data is also ignored on writes to read-only addresses but not reserved addresses. Do not write to reserved address locations. See Figure 36 for an example Write Data communication sequence.

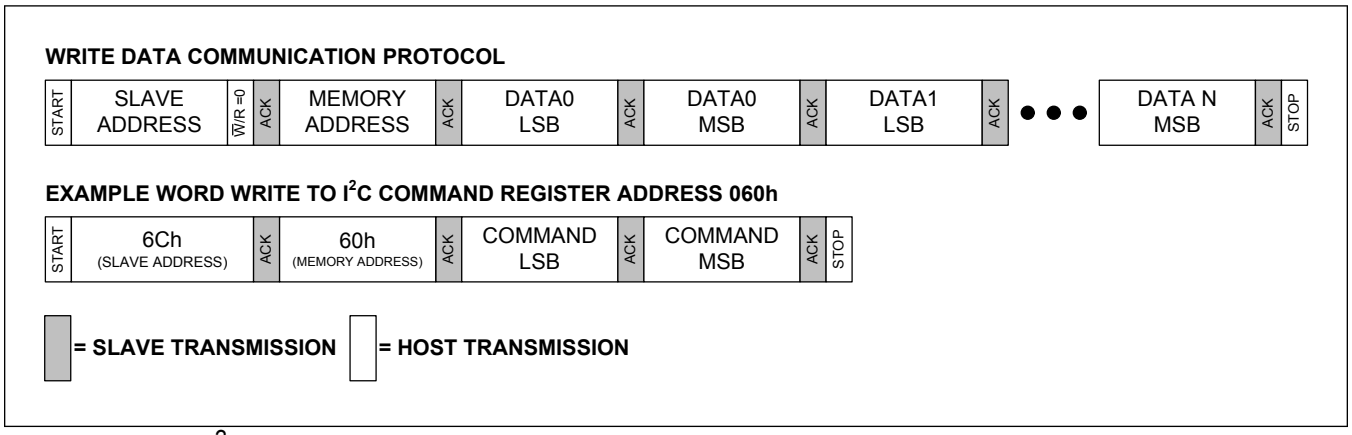

Figure 36. Example I²C Write Data Communication Sequence

I²C Read Data Protocol

The Read Data protocol is used to transmit data from IC memory locations 000h to 1FFh . Addresses 000h to 0FFh and 180h to 1FFh can be read as a block. Addresses 100h to 17Fh must be read as individual words. The memory address is sent by the bus master as a single byte value immediately after the slave address. Immediately following the memory address, the bus master issues a REPEATED START followed by the slave address. The MAX17300-MAX17303 ACKs the address and begin transmitting data. A word of data is read as two separate bytes that the master must ACK. The LSB is read first, followed by an ACK from the master. The MSB is read next, followed by an ACK from the master. Because the address is automatically incremented after the least significant bit (LSb) of the MSB of each word transmitted by the IC, the LSB of the data at the next memory address can be read immediately after the acknowledgment of the MSB of data at the previous address. The master indicates the end of a read transaction by sending a NACK followed by a STOP. If the bus master continues an auto-incremented read transaction beyond memory address 0FFh or 1FFh, the IC transmits all 1s until a NACK or STOP is received. Data from reserved address locations is undefined. See Figure 37 for an example Read Data communication sequence.

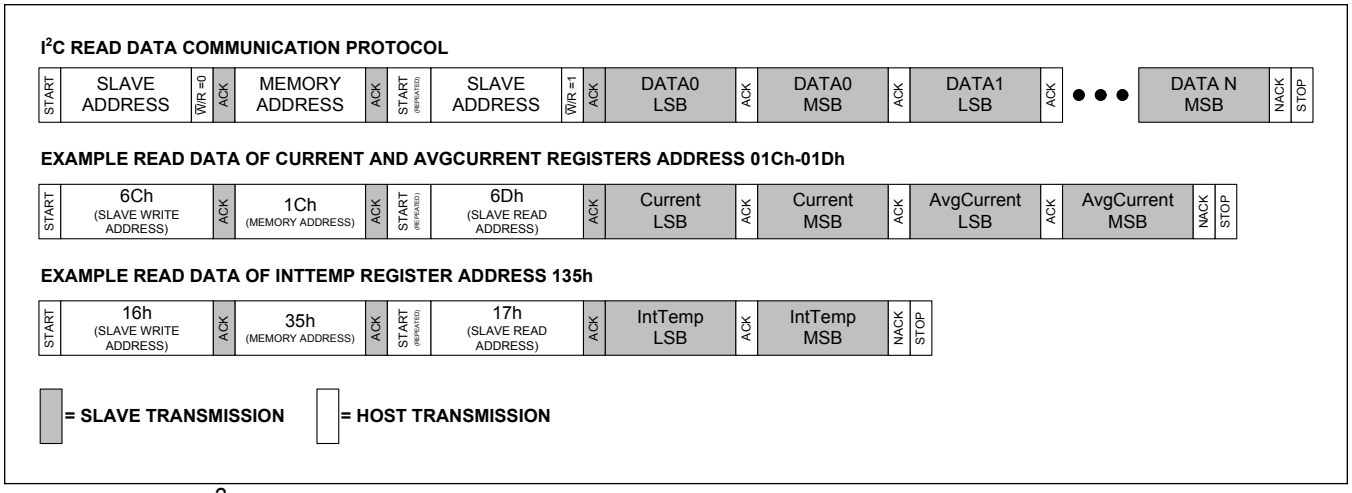

Figure 37. Example I2C Read Data Communication Sequence

SBS Protocols

The following 2-Wire communication protocols must be used by the bus master to access MAX17300-MAX17303 memory locations 100h to 17Fh. These protocols follow the smart battery specification for communication.

SBS Write Word Protocol

The Write Word protocol is used to transmit data to IC memory addresses between 100h and 17Fh that do not require the Write Block protocol. The memory address is sent by the bus master as a single byte LSB value immediately after the slave address, the MSb of the address is omitted. The LSB of the data to be stored is written immediately after the memory address byte is acknowledged, followed by the MSB. A PEC byte may follow the data word, but the data word is written without checking the validity of the PEC. The master indicates the end of a write transaction by sending a STOP or Repeated START after receiving the last acknowledge bit. Data is ignored on writes to read-only addresses but not reserved addresses. Do not write to reserved address locations. The Write Word protocol should not be used to write to addresses supported by the Write Block protocol, use Write Block at these locations instead. See Figure 38 for an example Write Word communication sequence.

Example SBS Write Word Communication Sequence

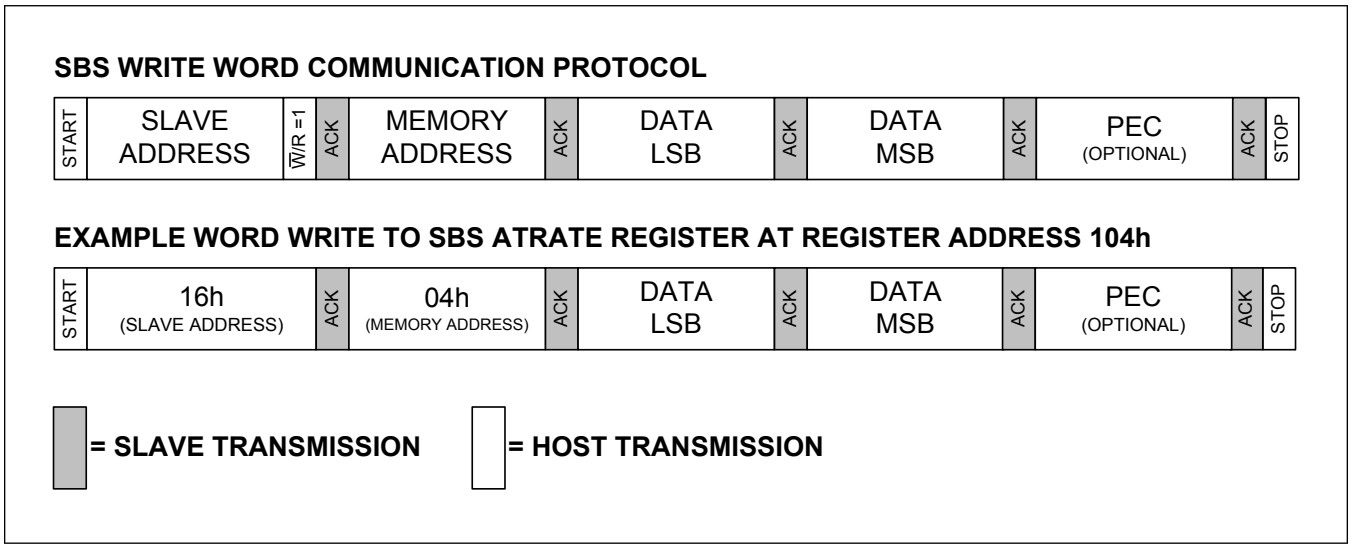

Figure 38. Example SBS Write Word Communication Sequence

SBS Read Word Protocol

The Read Word protocol is used to read data from the IC at memory addresses between 100h and 17Fh. The memory address is sent by the bus master as a single byte LSB value immediately after the slave address, the MSb of the address is ignored. The LSB of the data is read immediately after the memory address byte is acknowledged, followed by the MSB. A PEC byte follows the data word. The master indicates the end of a write transaction by sending a STOP or Repeated START after not acknowledging the last received byte. Data from reserved address locations is undefined. The Read Word protocol should not be used to read from addresses supported by the Read Block protocol, use Read Block at these locations instead. See Figure 39 for an example Read Word communication sequence.

Example SBS Read Word Communication Sequence

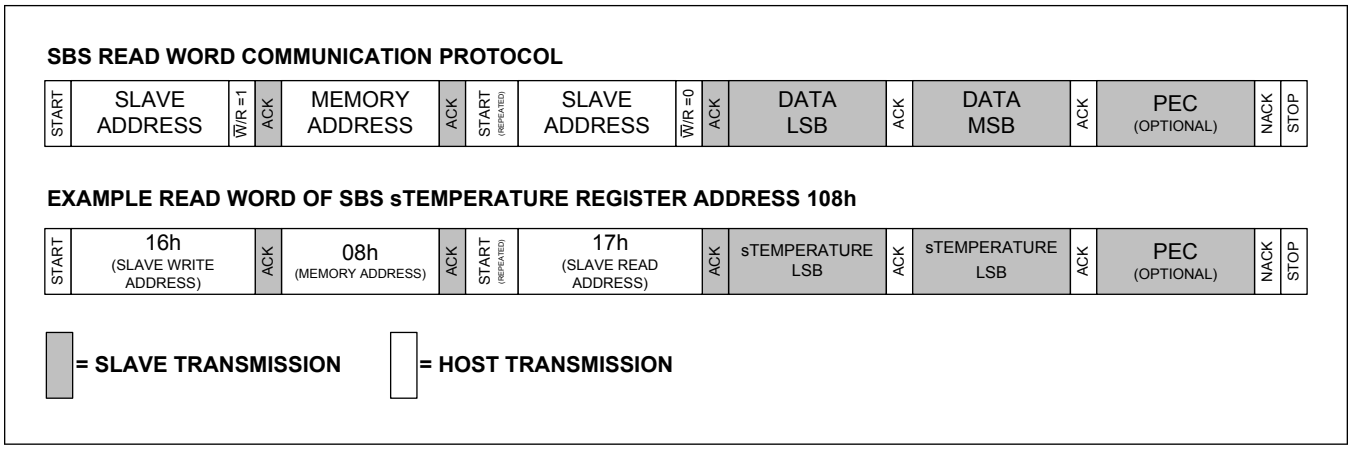

Figure 39. Example SBS Read Word Communication Sequence

SBS Write Block Protocol

The SBS Write Block protocol is not supported by the MAX17300-MAX17303. Use the Write Data command sequence to the corresponding nonvolatile memory locations to update Write/Read Block register locations. See Table 112.

SBS Read Block Protocol

The Read Block protocol is similar to the Read Word protocol except the master reads multiple words of data at once. A data size byte is transmitted by the IC immediately after the memory address byte and before the first byte of data to be read. The Read Block protocol is only supported at the register locations shown in Table 120. PEC error checking is provided by the Read Block protocol if nNVCfg0.enSBS = 1. Figure 40 shows an example Read Block communication sequence.

Example SBS Read Block Communication Sequence

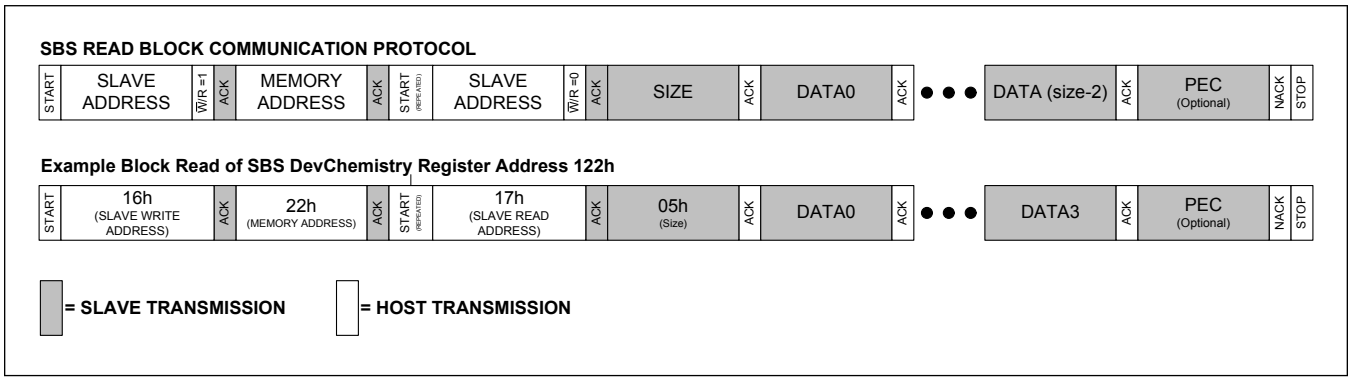

Figure 40. Example SBS Read Block Communication Sequence

Valid SBS Read Block Registers

Table 120. Valid SBS Read Block Registers

ADDRESS	REGISTER	SIZE BYTE MAX VALUE	FORMAT
0120h	sManfctName	0Ah	ASCII String
0121h	sDeviceName	0Ch	ASCII String
0122h	sDevChemistry	05h	ASCII String
0123h	sManfctData	1Ah	Hexadecimal
011Ch	sSerialNumber	08h	Hexadecimal
0170h	sManfctInfo	18h	Hexadecimal

Packet Error Checking

SBS read functions support packet error checking (PEC) if nNVCfg0.enSBS is enabled. The host system is responsible for verifying the CRC value it receives and taking action as a result. SBS write functions accept a PEC byte but complete the write function regardless of the value of the PEC.

The CRC can be generated by the host using a circuit consisting of a shift register and XOR gates as shown in Figure 41, or it can be generated in software using the polynomial $X^8 + X^2 + X^1 + 1$. Refer to the *Smart Battery Data Specification* for more information.

PEC CRC Generation Block Diagram

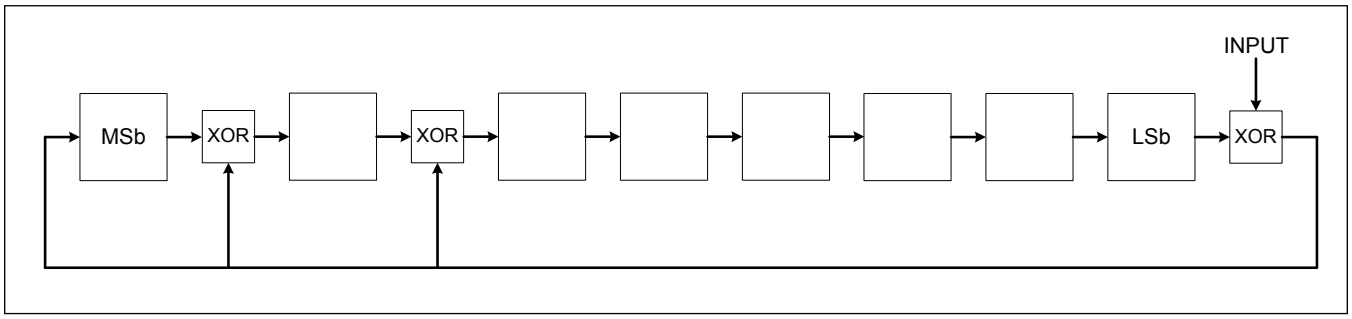

Figure 41. PEC CRC Generation Block Diagram

1-Wire Bus System (MAX17310-MAX17313 Only)

The MAX17310-MAX17313 communicates to a host through a Maxim 1-Wire interface. The 1-Wire bus is a system that has a single bus master and one or more slaves. A multi-drop bus is a 1-Wire bus with multiple slaves, while a single-drop bus has only one slave device. In all instances, this IC is a slave device. The bus master is typically a microprocessor in the host system. The discussion of this bus system consists of five topics: 64-bit net address, CRC generation, hardware configuration, transaction sequence, and 1-Wire signaling.

Hardware Configuration

Because the 1-Wire bus has only a single line, it is important that each device on the bus be able to drive it at the appropriate time. To facilitate this, each device attached to the 1-Wire bus must connect to the bus with open-drain or tri-state output drivers. The MAX17310-MAX17313 uses an open-drain output driver as part of the bidirectional interface circuitry shown in Figure 42. If a bidirectional pin is not available on the bus master, separate output and input pins can be connected together. Communication speed is controlled by the OD/SCL pin. Connect OD/SCL to PACK- to enable communication at standard speed. Connect OD/SCL to the REG3 pin to enable communication at overdrive speed.

The 1-Wire bus must have a pullup resistor on the host side of the bus. A value between 2kΩ and 5kΩ is recommended for most applications. The idle state for the 1-Wire bus is logic high. If, for any reason, a bus transaction must be suspended, the bus must be left in the idle state to properly resume the transaction later. Note that if the bus is left low for more than t_{LOW0}, slave devices on the bus begin to interpret the low period as a reset pulse, effectively terminating the transaction.

1-Wire Bus Interface Circuitry

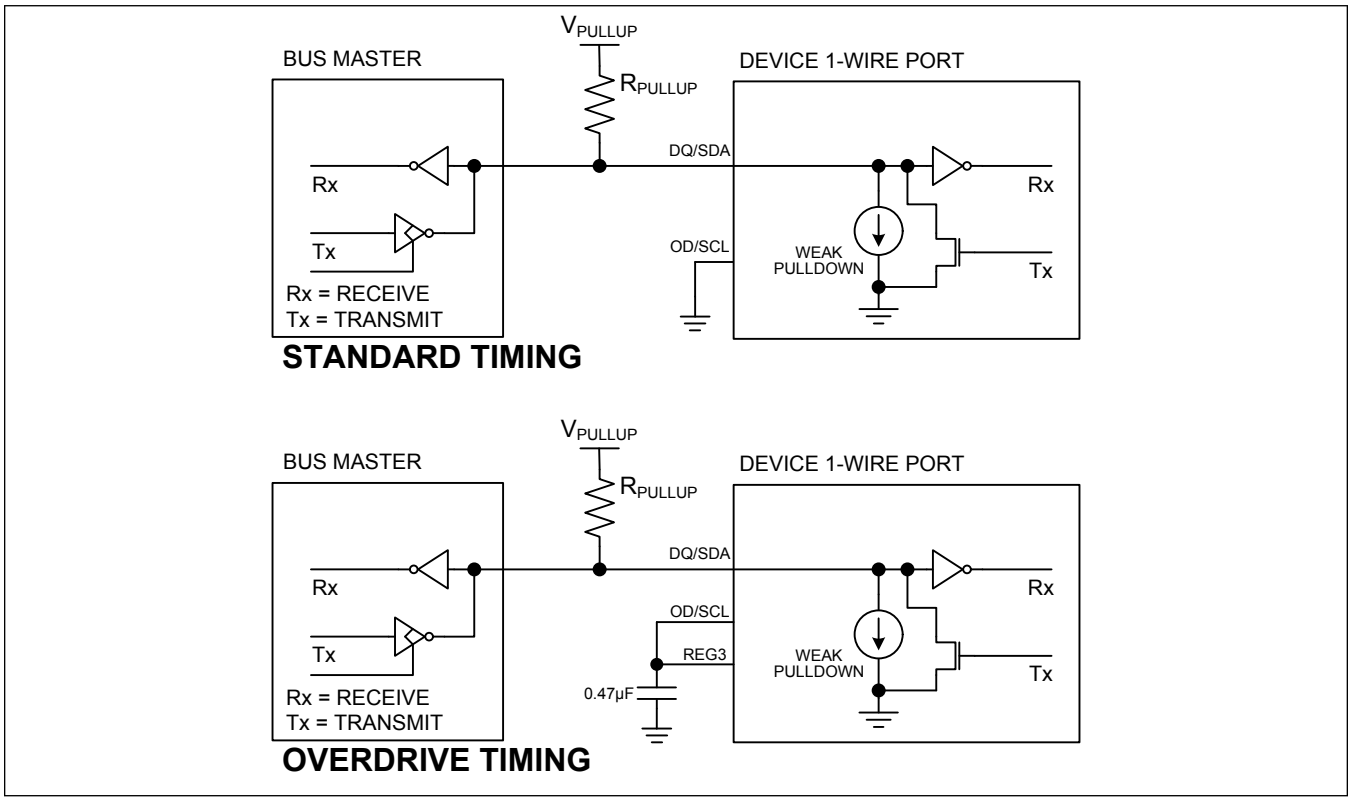

Figure 42. 1-Wire Bus Interface Circuitry

64-Bit Net Address (ROM ID)

The 1-Wire net address is 64 bits in length. The term net address is synonymous with the ROM ID or ROM code terms used in other 1-Wire documentation. The value of the net address is stored in nonvolatile memory and cannot be changed. In a 1-Wire standard net address, the first eight bits of the net address are the 1-Wire family code. This value is the same for all ICs of the same type. The next 48 bits are a unique serial number. The last eight bits are a cyclic redundancy check (CRC) of the first 56 bits. Table 121 details the Net Address data format. The 64-bit net address and the 1-Wire I/O circuitry built into the device enable the MAX1731x to communicate through the 1-Wire protocol detailed in this data sheet.

Table 121. 1-Wire Net Address Format

MSb: 8-Bit CRC	48-Bit Serial Number	LSb: 8-Bit Family Code (26h)

I/O Signaling

The 1-Wire bus requires strict signaling protocols to ensure data integrity. The four protocols used by the MAX17310-MAX17313 are as follows: the initialization sequence (reset pulse followed by presence pulse), write 0, write 1, and read data. The bus master initiates all signaling except for the presence pulse.

Reset Time Slot

The initialization sequence required to begin any communication with the MAX17310-MAX17313 is shown in Figure 43. The bus master transmits (Tx) a reset pulse for t_{RSTL}. The bus master then releases the line and goes into Receive mode (Rx). The 1-Wire bus line is then pulled high by the pullup resistor. After detecting the rising edge on the DQ pin, the MAX17310-MAX17313 waits for t_{PDH} and then transmits the presence pulse for t_{PDL}. A presence pulse following a reset pulse indicates that the MAX17310-MAX17313 is ready to accept a net address command.

1-Wire Initialization Sequence

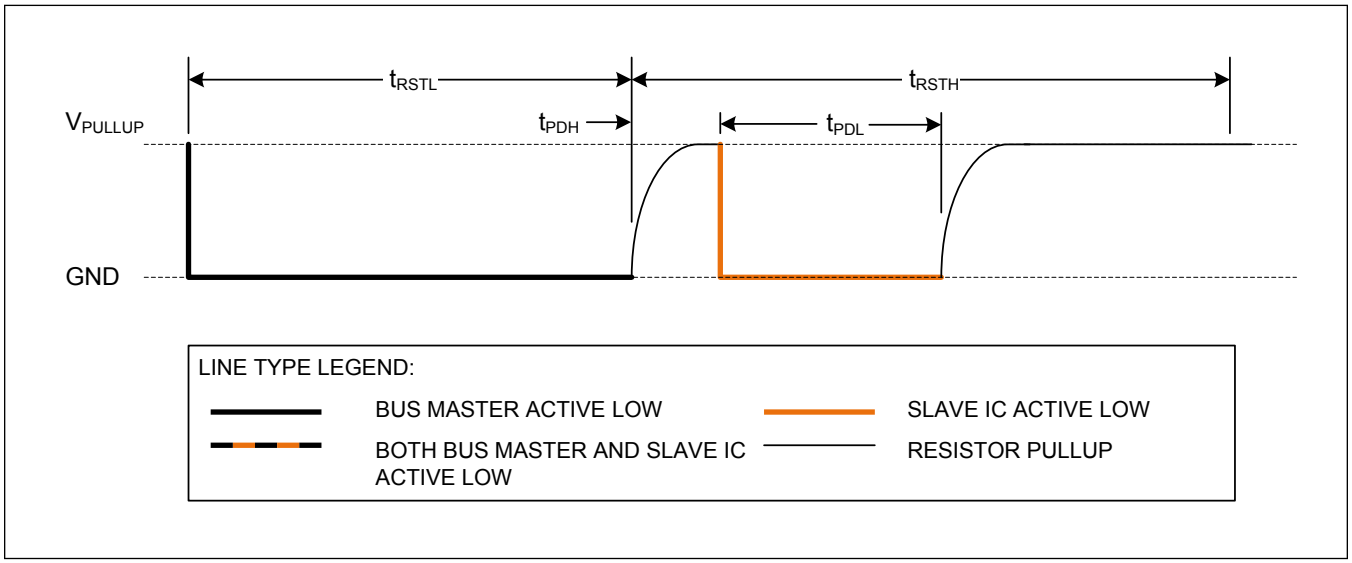

Figure 43. 1-Wire Initialization Sequence

Write Time Slots

A write-time slot is initiated when the bus master pulls the 1-Wire bus from a logic-high (inactive) level to a logic-low level. There are two types of write-time slots: write 1 and write 0. All write-time slots must be t_{SLOT} in duration with a 1µs minimum recovery time, t_{REC}, between cycles. The MAX17310-MAX17313 samples the 1-Wire bus line between t_{LOW1_MAX} and t_{LOW0_MIN} after the line falls. If the line is high when sampled, a write 1 occurs. If the line is low when sampled, a write 0 occurs. The sample window is illustrated in Figure 44. For the bus master to generate a write-1 time slot, the bus line must be pulled low and then released, allowing the line to be pulled high less than t_{RDV} after the start of the write time slot. For the host to generate a write 0 time slot, the bus line must be pulled low and held low for the duration of the write-time slot.

Read Time Slots

A read-time slot is initiated when the bus master pulls the 1-Wire bus line from a logic-high level to a logic-low level. The bus master must keep the bus line low for at least 1µs and then release it to allow the MAX17310-MAX17313 to present valid data. The bus master can then sample the data t_{RDV} from the start of the read-time slot. By the end of the read-time slot, the MAX17310-MAX17313 releases the bus line and allows it to be pulled high by the external pullup resistor. All read-time slots must be t_{SLOT} in duration with a 1µs minimum recovery time, t_{REC}, between cycles. See Figure 44 and the timing specifications in the Electrical Characteristics table for more information.

1-Wire Write and Read Time Slots

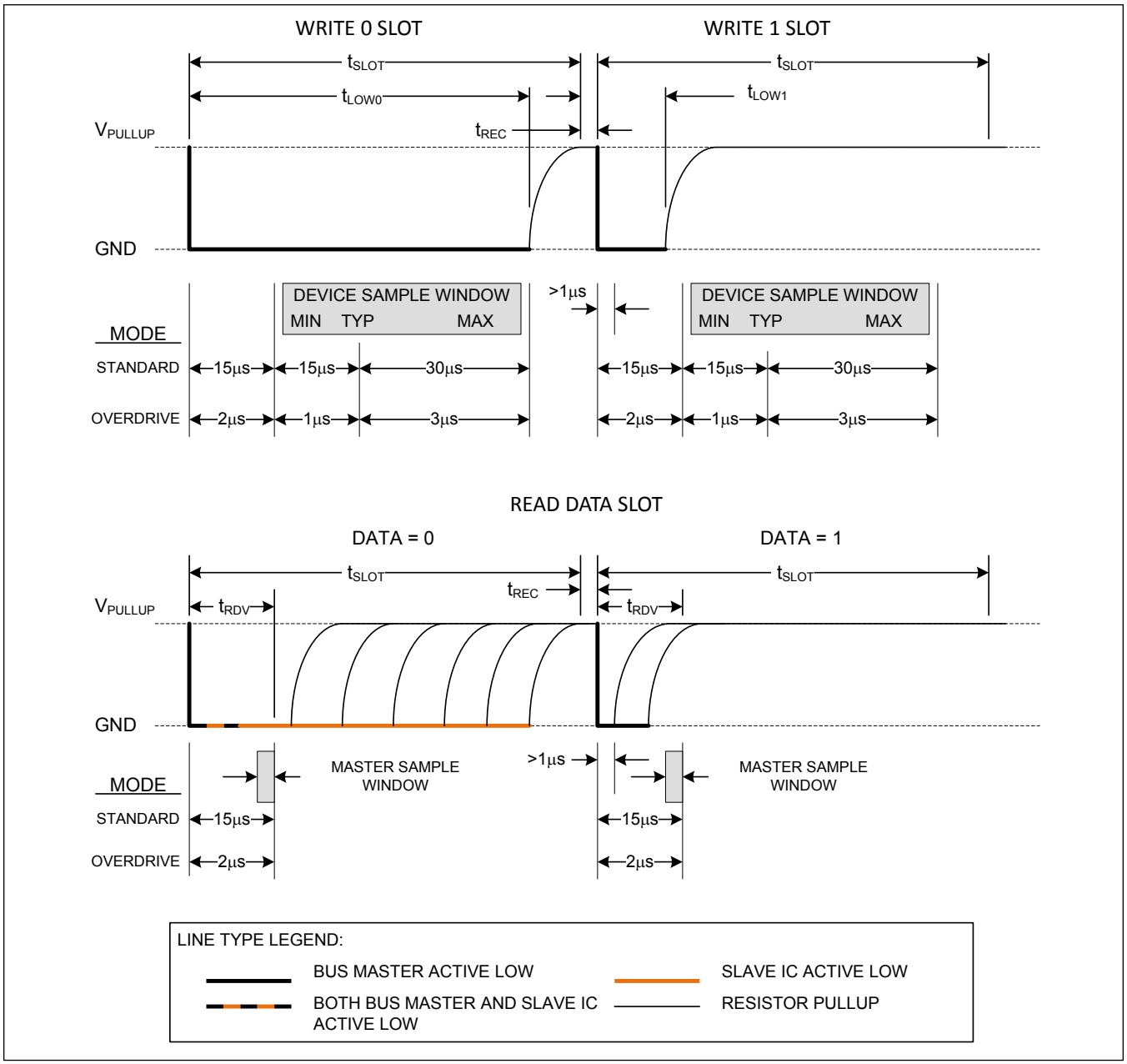

Figure 44. 1-Wire Write and Read Time Slots

Transaction Sequence

The protocol for accessing the MAX17310-MAX17313 through the 1-Wire port is as follows:

- Initialization
- Net Address Command
- Function Command(s)
- Data Transfer (not all commands have data transfer)

Net Address Commands

Once the bus master has detected the presence of one or more slaves, it can issue one of the net address commands described in the following paragraphs. The name of each net address command (ROM command) is followed by the 8-bit op code for that command in square brackets.

Read Net Address [33h]

This command allows the bus master to read the MAX17310-MAX17313's 1-Wire net address. This command can only be used if there is a single slave on the bus. If more than one slave is present, a data collision occurs when all slaves try to transmit at the same time (open-drain produces a wired-AND result).

Match Net Address [55h]

This command allows the bus master to specifically address one MAX17310-MAX17313 on the 1-Wire bus. Only the addressed MAX17310-MAX17313 responds to any subsequent function command. All other slave devices ignore the function command and wait for a reset pulse. This command can be used with one or more slave devices on the bus.

Skip Net Address [CCh]

This command saves time when there is only one MAX17310-MAX17313 on the bus by allowing the bus master to issue a function command without specifying the address of the slave. If more than one slave device is present on the bus, a subsequent function command can cause a data collision when all slaves transmit data at the same time.

Search Net Address [F0h]

This command allows the bus master to use a process of elimination to identify the 1-Wire net addresses of all slave devices on the bus. The search process involves the repetition of a simple three-step routine: read a bit, read the complement of the bit, then write the desired value of that bit. The bus master performs this simple three-step routine on each bit location of the net address. After one complete pass through all 64 bits, the bus master knows the address of one device. The remaining devices can then be identified on additional iterations of the process. Refer to Chapter 5 of the *Book of iButton® Standards* for a comprehensive discussion of a net address search, including an actual example (*www.analog.com/iButtonBook*).

iButton is a registered trademark of Maxim Integrated Products, Inc.

1-Wire Functions

After successfully completing one of the net address commands, the bus master can access the features of the MAX17310-MAX17313 with either a Read Data or Write Data function command described in the following paragraphs. Any other IC operation such as a Compute MAC operation is accomplished by writing to the COMMAND register. See the *Nonvolatile Memory Commands* section for details.

Read Data [69h, LL, HH]

This command reads data from the MAX17310-MAX17313 starting at memory address HHLL. Any memory address from 0000h to 01FFh is a valid starting address. The LSb of the data in address HHLL is available to be read immediately after the MSb of the address has been entered. Because the address is automatically incremented after the MSb of each byte is received, the LSb of the data at address HHLL+ 1 is available to be read immediately after the MSb of the data at address HHLL. If the bus master continues to read beyond address 01FFh, data is undefined. Addresses labeled "Reserved" in the memory map contain undefined data values. The Read Data command can be terminated by the bus master with a reset pulse at any bit boundary. Reads from nonvolatile memory addresses return the data in the shadow RAM. A Recall Data command is required to transfer data from nonvolatile memory to the shadow RAM. See

the *Nonvolatile Memory Commands* section for more details. See Figure 45 for an example Read Data communication sequence.

Write Data [6Ch, LL, HH]

This command writes data to the MAX17310-MAX17313 starting at memory address HHLL. Any memory address from 0000h to 01FFh is a valid starting address. The LSb of the data to be stored at address HHLL can be written immediately after the MSb of address has been entered. Because the address is automatically incremented after the MSb of each byte is written, the LSb to be stored at address HHLL + 1 can be written immediately after the MSb to be stored at address HHLL. If the bus master continues to write beyond address 01FFh, the data is ignored by the IC. Writes to read-only addresses and locked memory blocks are ignored. Do not write to RESERVED address locations. Incomplete bytes are not written. Writes to unlocked nonvolatile memory addresses modify the shadow RAM. A Copy NV Block command is required to transfer data from the shadow RAM to nonvolatile memory. See the *Nonvolatile Memory Commands* section for more details. See Figure 45 for an example Write Data communication sequence.

Example 1-Wire Communication Sequences

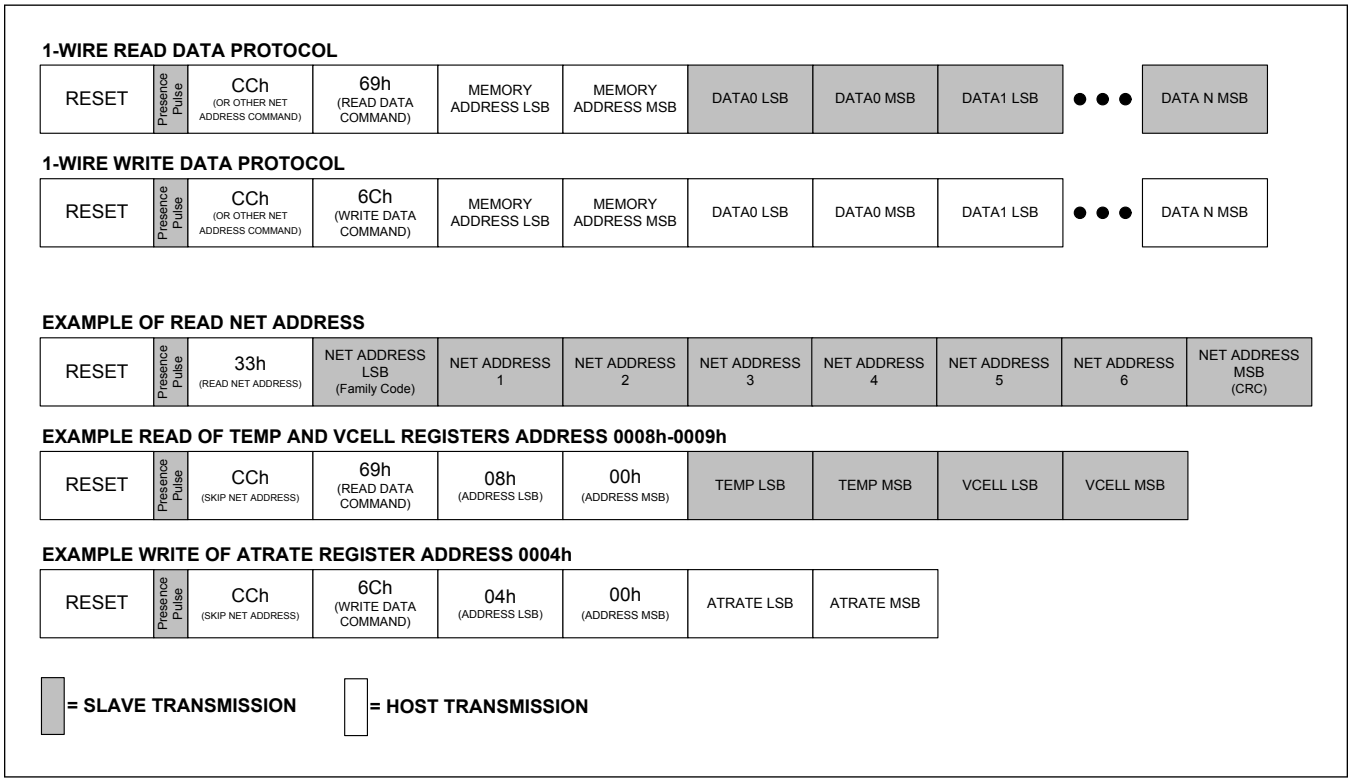

Figure 45. Example 1-Wire Communication Sequences

Summary of Commands

Any operation other than writing or reading a memory location is executed by writing the appropriate command to the Command or Config2 registers. Table 122 lists all function commands understood by the MAX1730x/MAX1731x. For both 1-Wire and 2-Wire communication, the function command must be written to the Command (060h) or Config2 (0ABh) registers. Device commands are described in detail in the *Authentication*, *Nonvolatile Memory*, *Reset*, and *Power Up* sections of the data sheet.

Table 122. All Function Commands

COMMAND	TYPE	REGISTER	HEX	DESCRIPTION
Compute MAC *Without* ROM ID	SHA	060h	3600h	Computes hash operation of the message block with logical 1s in place of the ROM ID.
Compute MAC *With* ROM ID	SHA	060h	3500h	Computes hash operation of the message block including the ROM ID.
Compute Next Secret *Without* ROM ID	SHA	060h	3000h	Computes hash operation of the message block with logical 1s in place of the ROM ID. The result is then stored as the new Secret.
Compute Next Secret *With* ROM ID	SHA	060h	3300h	Computes hash operation of the message block including the ROM ID. The result is then stored as the new Secret.
Clear Secret	SHA	060h	5A00h	Resets the SHA-256 Secret to a value of all 0s.
Lock Secret	SHA	060h	6000h	Permanently locks the SHA-256 Secret.
Copy NV Block	Memory	060h	E904h	Copies all shadow RAM locations to nonvolatile memory at the same time.
NV Recall	Memory	060h	E001h	Recalls all nonvolatile memory to RAM.
History Recall	Memory	060h	E2XXh	Recalls a page of nonvolatile memory history into RAM page 1Eh.
NV Lock	Memory	060h	6AXXh	Permanently locks an area of memory. See the *Memory Locks* section for details.
Hardware Reset	Reset	060h	000Fh	Recalls nonvolatile memory into RAM and resets the IC hardware. Fuel gauge operation is not reset.
Fuel Gauge Reset	Reset	0ABh	8000h	Restarts the fuel gauge operation without affecting nonvolatile shadow RAM settings.

Appendix A: Reading History Data Pseudo-Code Example

The following pseudo-code can be used as a reference for reading history data from the IC. The code first reads all flag information, tests all flag information, then reads all valid history data into a two-dimensional array. Afterwards, the HistoryLength variable indicates the depth of the history array data.

```
Int WriteFlags[26];
Int ValidFlags[26];
Boolean PageGood[100];
Int HistoryData[100][16];
Int HistoryLength;
Int word, position, flag1, flag2, flag3, flag4;
//Read all flag information from the IC
WriteCommand(0xE29C);
Wait(tRECALL);
WriteFlags[0] = ReadData(0x1F2);
WriteFlags[1] = ReadData(0x1F3);
WriteFlags[2] = ReadData(0x1F4);
```

```
WriteFlags[3] = ReadData(0x1F5);
WriteFlags[4] = ReadData(0x1F6);
WriteFlags[5] = ReadData(0x1F7);
WriteFlags[6] = ReadData(0x1F8);
WriteFlags[7] = ReadData(0x1F9);
WriteFlags[8] = ReadData(0x1FA);
WriteFlags[9] = ReadData(0x1FB);
WriteFlags[10] = ReadData(0x1FC);
WriteFlags[11] = ReadData(0x1FD);
WriteFlags[12] = ReadData(0x1FE);
ValidFlags[0] = ReadData(0x1FF);
WriteCommand(0xE29D);
Wait(tRECALL);
ValidFlags[1] = ReadData(0x1F0);
ValidFlags[2] = ReadData(0x1F1);
ValidFlags[3] = ReadData(0x1F2);
ValidFlags[4] = ReadData(0x1F3);
ValidFlags[5] = ReadData(0x1F4);
ValidFlags[6] = ReadData(0x1F5);
ValidFlags[7] = ReadData(0x1F6);
ValidFlags[8] = ReadData(0x1F7);
ValidFlags[9] = ReadData(0x1F8);
ValidFlags[10] = ReadData(0x1F9);
ValidFlags[11] = ReadData(0x1FA);
ValidFlags[12] = ReadData(0x1FB);
//Determine which history pages contain valid data
For loop = 0 to 99
{
    word = (int)( loop / 8 );
    position = loop % 8 ;  //remainder
    flag1 = (WriteFlags[word] >> position) & 0x0001;
    flag2 = (WriteFlags[word] >> (position+8)) & 0x0001;
    flag3 = (ValidFlags[word] >> position) & 0x0001;
    flag4 = (ValidFlags[word] >> (position+8)) & 0x0001;
    if (flag1 || flag2) && (flag3 || flag4)
        PageGood[loop] = True;
    else
        PageGood[loop] = False;
}
//Read all the history data from the IC
HistoryLength = 0;
```

```
For loop = 0 to 99
{
    if(PageGood[loop]) == TRUE
    {
        SendCommand(0xE22E + loop);
        Wait(tRECALL);
        HistoryData[HistoryLength][0] = ReadData(0x1F0);
        ...
        HistoryData[HistoryLength][15] = ReadData(0x1FF);
        HistoryLength++;
    }
}
```

Typical Application Circuits

Typical Application Schematic

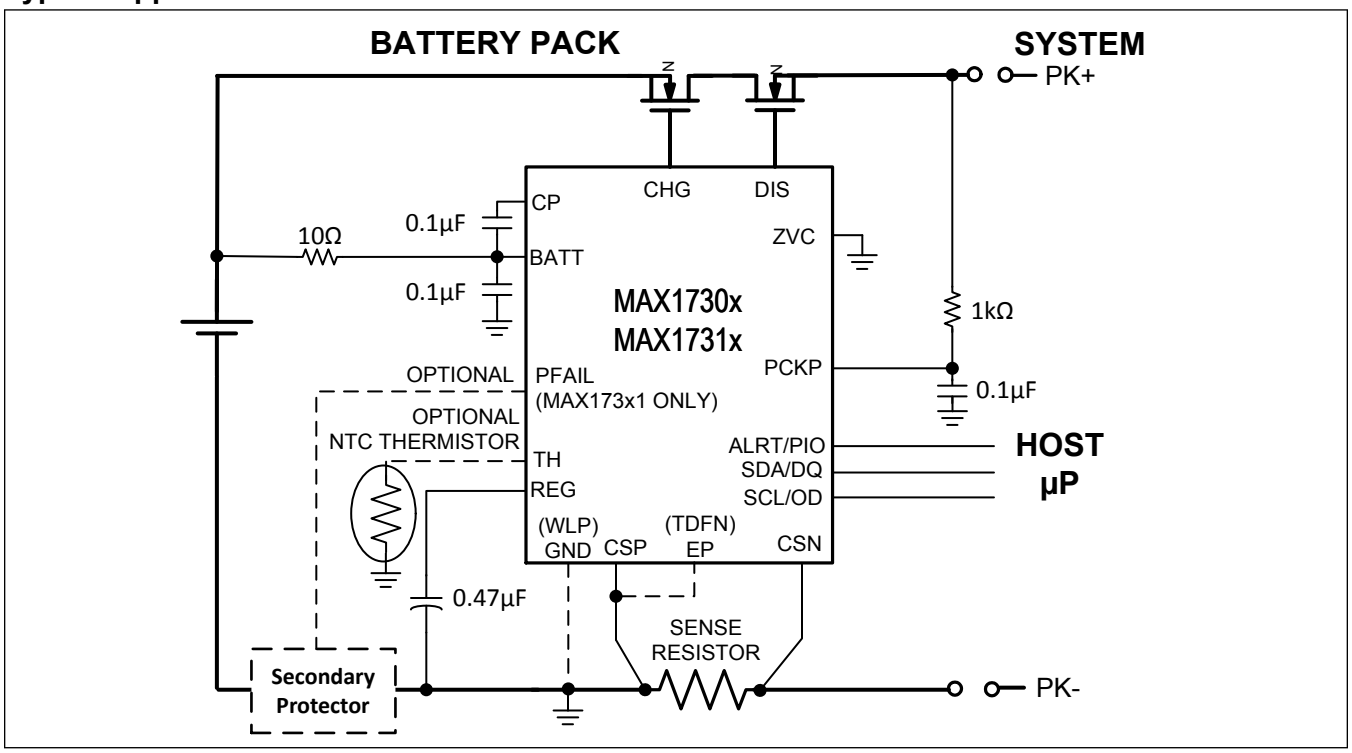

Typical Application Circuits (continued)

Typical Application with a Secondary Protector

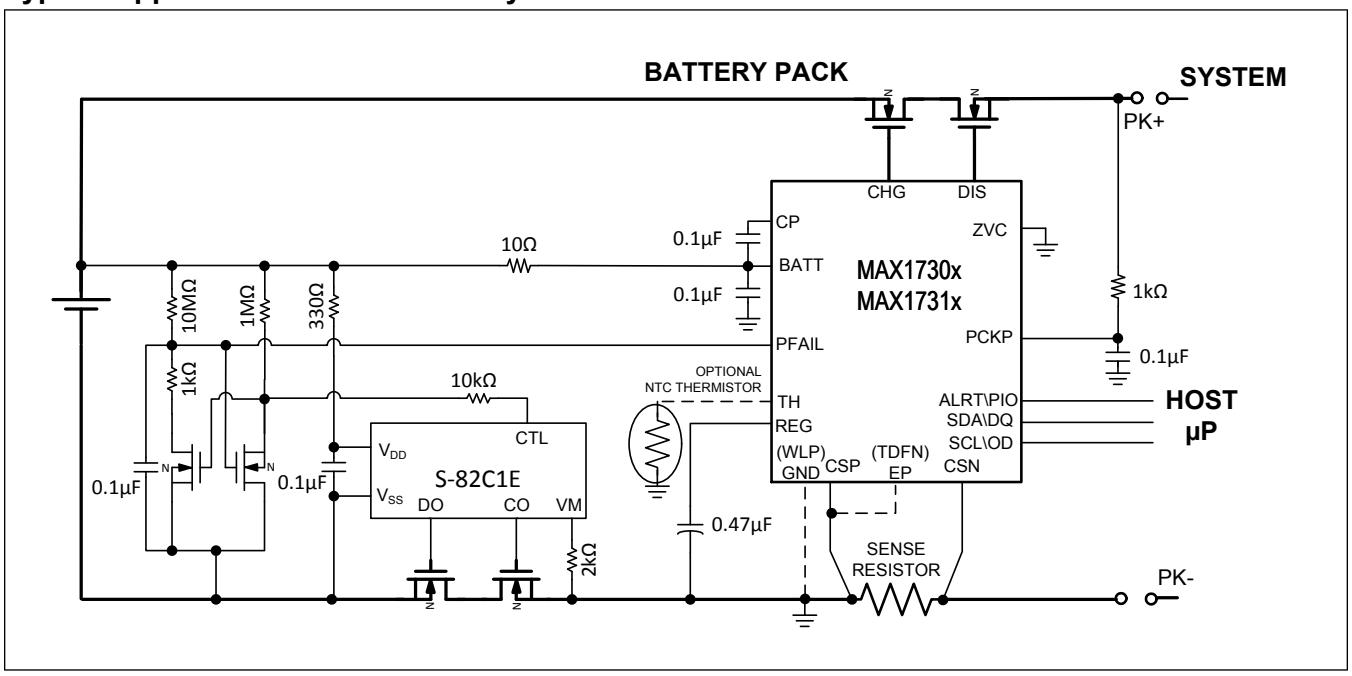

When using the MAX1730x/MAX1731x with a secondary protector, there are a few instances that must be carefully considered so that the two protectors can work well together. In the event that the secondary protector trips first when there is an over charge protection event, the MAX1730x/MAX1731x is cut off from the battery voltage and it sees the charger voltage at the BATT pin which introduces error into the fuel gauge.

In the event of an over-discharge current or short-circuit current is detected by the secondary protector, it cuts off power to the MAX1730x/MAX1731x and cause the fuel gauge to reset and requires a charger to wake it back up. A good option would be to have a latch on the secondary protector to also require a charger to wake it up as well to allow both protectors to wake up at the same time.

Typical Application Circuits (continued)

Typical Application with a Fuse

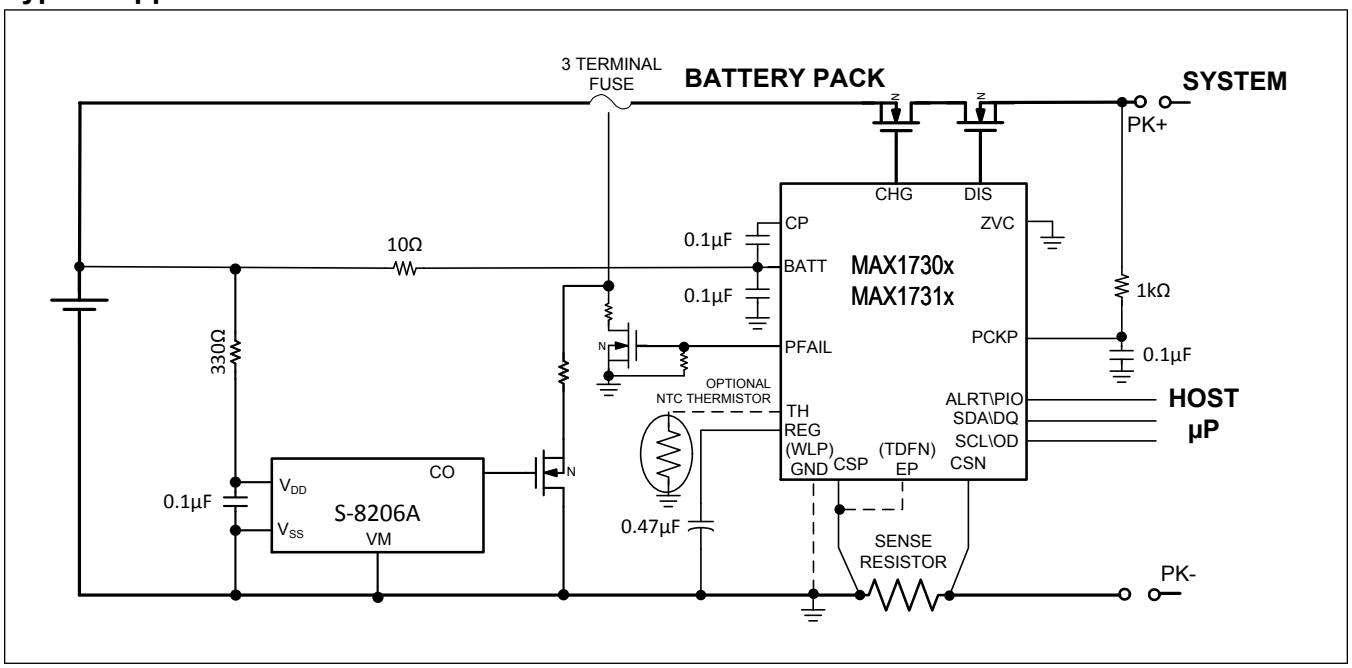

The MAX1730x/MAX1731x can permanently open a three terminal fuse with the PFAIL pin when a permanent failure is detected.

Pushbutton Schematic

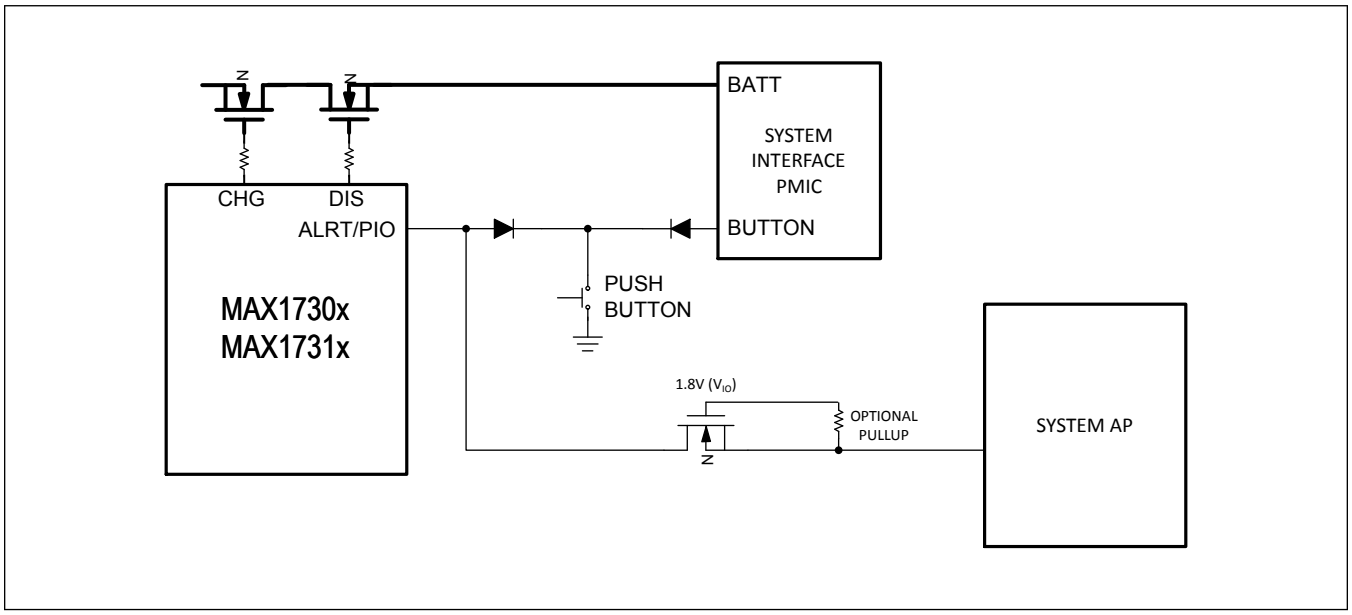

Typical Application Circuits (continued)

A pushbutton can be shared by the MAX1730x/MAX1731x and the system to wake up the system and the MAX1730x/MAX1731x. The diode on the system interface PMIC blocks the pulldown when there is no supply. This prevents the wakeup for the MAX1730x/MAX1731x when the system interface PMIC loses power in ship mode. The diode on the ALRT/PIO pin prevents the alert pulldown from triggering a button action on the PMIC. This prevents accidental shutdown in the event of a alert uncleared for > 10 seconds. The FET between MAX1730x/MAX1731x and System AP is to block the System AP pulldown from triggering the wakeup when the AP doesn't have power. The FET acts as a level shifter and passes the pulldown alert signal in both directions when the 1.8V voltage is present.

Ordering Information

PART	FUEL GAUGE	PROTECTOR	AUTHENTICATION	INTERFACE	PIN-PACKAGE
MAX17300G+	1-Cell Fuel Gauge with ModelGauge m5 EZ	2-Level with Internal Self-Discharge Detection	SHA-256	I^2C	14 TDFN-EP
MAX17300G+T	1-Cell Fuel Gauge with ModelGauge m5 EZ	2-Level with Internal Self-Discharge Detection	SHA-256	I^2C	14 TDFN-EP
MAX17300X+	1-Cell Fuel Gauge with ModelGauge m5 EZ	2-Level with Internal Self-Discharge Detection	SHA-256	I^2C	15 WLP
MAX17300X+T	1-Cell Fuel Gauge with ModelGauge m5 EZ	2-Level with Internal Self-Discharge Detection	SHA-256	I^2C	15 WLP
MAX17310G+	1-Cell Fuel Gauge with ModelGauge m5 EZ	2-Level with Internal Self-Discharge Detection	SHA-256	1-Wire	14 TDFN-EP
MAX17310G+T	1-Cell Fuel Gauge with ModelGauge m5 EZ	2-Level with Internal Self-Discharge Detection	SHA-256	1-Wire	14 TDFN-EP
MAX17310X+	1-Cell Fuel Gauge with ModelGauge m5 EZ	2-Level with Internal Self-Discharge Detection	SHA-256	1-Wire	15 WLP
MAX17310X+T	1-Cell Fuel Gauge with ModelGauge m5 EZ	2-Level with Internal Self-Discharge Detection	SHA-256	1-Wire	15 WLP
MAX17301G+	1-Cell Fuel Gauge with ModelGauge m5 EZ	2-Level	SHA-256	I^2C	14 TDFN-EP
MAX17301G+T	1-Cell Fuel Gauge with ModelGauge m5 EZ	2-Level	SHA-256	I^2C	14 TDFN-EP
MAX17301X+	1-Cell Fuel Gauge with ModelGauge m5 EZ	2-Level	SHA-256	I^2C	15 WLP
MAX17301X+T	1-Cell Fuel Gauge with ModelGauge m5 EZ	2-Level	SHA-256	I^2C	15 WLP
MAX17311G+	1-Cell Fuel Gauge with ModelGauge m5 EZ	2-Level	SHA-256	1-Wire	14 TDFN-EP
MAX17311G+T	1-Cell Fuel Gauge with ModelGauge m5 EZ	2-Level	SHA-256	1-Wire	14 TDFN-EP
MAX17311X+	1-Cell Fuel Gauge with ModelGauge m5 EZ	2-Level	SHA-256	1-Wire	15 WLP
MAX17311X+T	1-Cell Fuel Gauge with ModelGauge m5 EZ	2-Level	SHA-256	1-Wire	15 WLP
MAX17302G+	1-Cell Fuel Gauge with ModelGauge m5 EZ	1-Level	SHA-256	I^2C	14 TDFN-EP
MAX17302G+T	1-Cell Fuel Gauge with ModelGauge m5 EZ	1-Level	SHA-256	I^2C	14 TDFN-EP
MAX17302X+	1-Cell Fuel Gauge with ModelGauge m5 EZ	1-Level	SHA-256	I^2C	15 WLP
MAX17302X+T	1-Cell Fuel Gauge with ModelGauge m5 EZ	1-Level	SHA-256	I^2C	15 WLP
MAX17312G+	1-Cell Fuel Gauge with ModelGauge m5 EZ	1-Level	SHA-256	1-Wire	14 TDFN-EP
MAX17312G+T	1-Cell Fuel Gauge with ModelGauge m5 EZ	1-Level	SHA-256	1-Wire	14 TDFN-EP
MAX17312X+	1-Cell Fuel Gauge with ModelGauge m5 EZ	1-Level	SHA-256	1-Wire	15 WLP

PART	FUEL GAUGE	PROTECTOR	AUTHENTICATION	INTERFACE	PIN-PACKAGE
MAX17312X+T	1-Cell Fuel Gauge with ModelGauge m5 EZ	1-Level	SHA-256	1-Wire	15 WLP
MAX17303G+	1-Cell Fuel Gauge with ModelGauge m5 EZ	1-Level		I^2C	14 TDFN-EP
MAX17303G+T	1-Cell Fuel Gauge with ModelGauge m5 EZ	1-Level		I^2C	14 TDFN-EP
MAX17303X+	1-Cell Fuel Gauge with ModelGauge m5 EZ	1-Level		I^2C	15 WLP
MAX17303X+T	1-Cell Fuel Gauge with ModelGauge m5 EZ	1-Level		I^2C	15 WLP
MAX17313G+	1-Cell Fuel Gauge with ModelGauge m5 EZ	1-Level		1-Wire	14 TDFN-EP
MAX17313G+T	1-Cell Fuel Gauge with ModelGauge m5 EZ	1-Level		1-Wire	14 TDFN-EP
MAX17313X+	1-Cell Fuel Gauge with ModelGauge m5 EZ	1-Level		1-Wire	15 WLP
MAX17313X+T	1-Cell Fuel Gauge with ModelGauge m5 EZ	1-Level		1-Wire	15 WLP

+Denotes a lead(Pb)-free/RoHS-compliant package.

T = Tape and reel.

Note: "2-Level" indicates that the PFAIL pin can be enabled to open an external fuse or latch a secondary protector in the event of a permanent failure.

Revision History

REVISION NUMBER	REVISION DATE	DESCRIPTION	PAGES CHANGED
0	1/19	Initial release	—
1	3/19	Updated the *Ordering Information* table	1, 157
2	4/19	Updated *Typical Operating Characteristics, General Description, Protector, Modes of Operation, Power Mode Transition State Diagram, Cycles and nCycles Register, AgeForecast Register, Battery Life Logging, Determining Number of Valid Logging Entries, Nonvolatile Block Programming, nConfig Register, nPackCfg Register, Register Settings for Common Thermistor Types, Device Reset, and Appendix A: Reading History Data Pseudo-Code Example* section; added *2-Stage MKDF Authentication Scheme and SOCHold Register* section; updated *Typical Application Circuits*	1, 22, 23, 26–28, 32, 33, 41, 44, 45, 60–62, 70–160
3	5/19	Updated the *Ordering Information* table	1, 159, 160
4	2/20	Updated the *Functional Diagram, Protector section, Voltage Thresholds* section, Figure 10, *Voltage Protection Registers* section, *Status/Configuration Protection Registers* section, *Nonvolatile Memory Commands* section, *Typical Application Circuits* section, and *Ordering Information* table; added *Permanent Failure* section	1, 26, 28, 33, 38, 43, 47, 54, 100, 152, 156
5	1/21	Updated the data sheet title, *General Description, Benefits and Features, Electrical Characteristics* table, Typical Operating Conditions, *Pin Description* table, *Detailed Description-General Description* section, *Protector* section, Figure 2, Table 2, *Fast Overcurrent Comparators* section, *Zero-Volt Charging* section, *Modes of Operation* section, *Power Mode Transition State Diagram* section, *nVPrtTH1 Register (1D0h), nDelayCfg Register (1DCh), nProtCfg Register (1D7h), nBattStatus Register (1A8h), ProtStatus Register (0D9h), HConfig2 Register (0F5h), nFullSOCThr Register (1C6h), Table 65, nNVCfg1 Register (1B9h)*, Table 73, Table 74, *nConfig Register (1B0h), nPackCfg Register (1B5h)*, Table 89, *Temperature Measurement* section, *Status Register (000h), Alert Function* section, *Smart Battery Compliant Operation* section, *I²C Read Data Protocol* section, and *Ordering Information* table; removed *nIAvgEmpty Register (1A8h)*; added *Battery Internal Self-Discharge Detection (ISD) (MAX17300/MAX17310 Only)* section, *Configuring ISD* section, *Parallel Battery Management (MAX17300/MAX17310 Only)* section, *Battery Internal Self-Discharge Detection Registers (MAX17300/MAX1310 Only)* section, *ProtAlrt Register (0AFh), Smart-Full (MAX17300/MAX17310 Only)* section, *nMiscCfg2 Register (1E4h) (MAX17300/MAX17310 Only), VCellRep Register (012h) (MAX17300/MAX17310 Only), CurrRep Register (022h) (MAX17300/MAX17310 Only)*, and *nThermCfg (1CAh) (MAX17300/MAX17310 Only)*	1, 18–27, 29–32, 34, 36, 38–41, 43–46, 49–51, 53, 60–66, 77, 78, 88, 97, 102, 105–111, 115–117, 122, 123, 125, 127–130, 134, 136, 157, 173, 174
6	1/21	Updated *Benefits and Features* section and *Electrical Characteristics* table	1, 18
7	5/21	Updated *Ideal Diode Behavior*, *Other Thresholds, nJEITAV Register (1D9h), nJEITAC Register (1D8h), nTPrtTh2 Register (1D5h), nTPrtTh3 Register (1D2h) (beyond JEITA), nProtCfg Register (1D7h), Age Register (007h), Battery Life Logging, 100 Record Life Logging, NV LOCK [6AXXh], I²C Write Data Protocol, I²C Read Data Protocol*, and *Appendix A: Reading History Data Pseudo-Code Example* section, updated *Ordering Information* table	36, 37, 39, 53, 54, 56, 57, 60, 65, 77, 92, 110, 146, 147, 156–158, 163
8	11/21	Updated *Charging Protection Functionality, nTPrtTh3 Register (1D2h) (beyond JEITA), nProtCfg Register (1D7h), nRFast Register (1E5h), nNVCfg0 Register (1B8h), nLearnCfg Register (19Fh), nConfig Register (1B0h), CurrRep Register (022h) (MAX17300/MAX17310 Only), Status Register (000h)*, and *Ordering Information* table	29, 56, 59, 83, 84, 94, 95, 105–107, 113, 120, 162, 163
9	6/23	Updated *DevName Register (021h), Nonvolatile Memory Commands, Battery Internal Self-Discharge Detection Registers* and *Ordering Information* table	56, 58, 104, 107, 118–155, 163

REVISION NUMBER	REVISION DATE	DESCRIPTION	PAGES CHANGED
10	5/24	Updated Table 74*, nConfig Register (1B0h), Temperature Measurement* section*, and nThermCfg (1CAh) (DevName≥4070h Only)* section	102, 107, 115, 117
11	2/25	Updated Pin Configuration, *Battery Life Logging*, *Nonvolatile Memory Map*, nNVCfg2 Register (1BAh), *Enabling and Freeing Nonvolatile vs. Defaults*, *Nonvolatile Memory Configuration Options*, added FOTPStat Register (0BBh), and nFaultLog Register(1AEh)	24, 62, 79, 91, 94, 99–104

Information furnished by Analog Devices is believed to be accurate and reliable. However, no responsibility is assumed by Analog Devices for its use, nor for any infringements of patents or other rights of third parties that may result from its use. Specifications subject to change without notice. No license is granted by implication or otherwise under any patent or patent rights of Analog Devices. Trademarks and registered trademarks are the property of their respective owners.