MX25L4006E

3V, 4M-BIT [x 1/x 2]
CMOS SERIAL FLASH MEMORY

Key Features

- *Hold Feature*
- *Low Power Consumption*
- *Auto Erase and Auto Program Algorithms*
- *Provides sequential read operation on whole chip*

Contents

FEATURES **4**
GENERAL DESCRIPTION **5**
PIN CONFIGURATIONS **5**
PIN DESCRIPTION **5**
BLOCK DIAGRAM **6**
MEMORY ORGANIZATION **7**
Table 1. Memory Organization 7
DEVICE OPERATION **8**
Figure 1. Serial Peripheral Interface Modes Supported 8
DATA PROTECTION **9**
Table 2. Protected Area Sizes 9
HOLD FEATURE **10**
Figure 2. Hold Condition Operation 10
Table 3. Command Definition 12
COMMAND DESCRIPTION **13**
(1) Write Enable (WREN) 13
(2) Write Disable (WRDI) 13
(3) Read Status Register (RDSR) 14
(4) Write Status Register (WRSR) 15
Table 4. Protection Modes 15
(5) Read Data Bytes (READ) 16
(6) Read Data Bytes at Higher Speed (FAST_READ) 16
(7) Dual Output Mode (DREAD) 16
(8) Sector Erase (SE) 16
(9) Block Erase (BE) 17
(10) Chip Erase (CE) 17
(11) Page Program (PP) 17
(12) Deep Power-down (DP) 18
(13) Release from Deep Power-down (RDP), Read Electronic Signature (RES) 18
(14) Read Identification (RDID) 19
(15) Read Electronic Manufacturer ID & Device ID (REMS) 19
Table 5. ID Definitions 19
(16) Read SFDP Mode (RDSFDP) 20
Read Serial Flash Discoverable Parameter (RDSFDP) Sequence 20
Table 6. Signature and Parameter Identification Data Values 21
Table 7. Parameter Table (0): JEDEC Flash Parameter Tables 22
Table 8. Parameter Table (1): Macronix Flash Parameter Tables 24
POWER-ON STATE **26**
ELECTRICAL SPECIFICATIONS **27**
Absolute Maximum Ratings 27

Figure 3. Maximum Negative Overshoot Waveform 27
Capacitance TA = 25°C, f = 1.0 MHz 27
Figure 4. Maximum Positive Overshoot Waveform 27
Figure 5. Input Test Waveforms and Measurement Level 28
Figure 6. Output Loading 28
Table 9. DC Characteristics (Temperature = -40°C to 85°C, VCC = 2.7V ~ 3.6V) 29
Table 10. AC Characteristics (Temperature = -40°C to 85°C, VCC = 2.7V ~ 3.6V) 30
Table 11. Power-Up Timing 31
Timing Analysis 32
Figure 7. Serial Input Timing 32
Figure 8. Output Timing 32
Figure 9. Hold Timing 33
Figure 10. WP# Disable Setup and Hold Timing during WRSR when SRWD=1 33
Figure 11. Write Enable (WREN) Sequence (Command 06) 34
Figure 12. Write Disable (WRDI) Sequence (Command 04) 34
Figure 13. Read Status Register (RDSR) Sequence (Command 05) 34
Figure 14. Write Status Register (WRSR) Sequence (Command 01) 35
Figure 15. Read Data Bytes (READ) Sequence (Command 03) 35
Figure 16. Read at Higher Speed (FAST_READ) Sequence (Command 0B) 36
Figure 17. Dual Output Read Mode Sequence (Command 3B) 36
Figure 18. Sector Erase (SE) Sequence (Command 20) 37
Figure 19. Block Erase (BE) Sequence (Command 52 or D8) 37
Figure 20. Chip Erase (CE) Sequence (Command 60 or C7) 37
Figure 21. Page Program (PP) Sequence (Command 02) 38
Figure 22. Deep Power-down (DP) Sequence (Command B9) 38
Figure 23. Read Electronic Signature (RES) Sequence (Command AB) 39
Figure 24. Release from Deep Power-down (RDP) Sequence (Command AB) 39
Figure 25. Read Identification (RDID) Sequence (Command 9F) 40
Figure 26. Read Electronic Manufacturer & Device ID (REMS) Sequence (Command 90) 40
Figure 27. Power-up Timing 41
OPERATING CONDITIONS 42
Figure 28. AC Timing at Device Power-Up 42
Figure 29. Power-Down Sequence 43
ERASE AND PROGRAMMING PERFORMANCE 44
DATA RETENTION 44
LATCH-UP CHARACTERISTICS 44
ORDERING INFORMATION 45
PART NAME DESCRIPTION 46
PACKAGE INFORMATION 47
8-pin SOP (150mil) 47
8-pin SOP (200mil) 48
8-pin PDIP (300mil) 49
8-land WSON (6x5mm, 0.8mm package height) 50
8-land USON (2x3x0.6mm) 51
REVISION HISTORY 52

4M-BIT [x 1/x 2] CMOS SERIAL FLASH

FEATURES

GENERAL

- Supports Serial Peripheral Interface -- Mode 0 and Mode 3
- 4,194,304 x 1 bit structure or 2,097,152 x 2 bits (Dual Output mode) structure
- 128 Equal Sectors with 4K byte each
  - Any Sector can be erased individually
- 8 Equal Blocks with 64K byte each
  - Any Block can be erased individually
- Single Power Supply Operation
  - 2.7 to 3.6 volt for read, erase, and program operations
- Latch-up protected to 100mA from -1V to Vcc +1V

PERFORMANCE

- High Performance
  - Fast access time: 86MHz serial clock
  - Serial clock of Dual Output mode: 80MHz
  - Fast program time: 0.6ms(typ.) and 3ms(max.)/page (256-byte per page)
  - Byte program time: 9us (typ.)
  - Fast erase time: 40ms(typ.)/sector (4K-byte per sector) ; 0.4s(typ.)/block (64K-byte per block)
- Low Power Consumption
  - Low active read current: 12mA(max.) at 86MHz and 4mA(max.) at 33MHz
  - Low active programming current: 15mA (typ.)
  - Low active sector erase current: 9mA (typ.)
  - Low standby current: 15uA (typ.)
  - Deep power-down mode 2uA (typ.)
- Minimum 100,000 erase/program cycles
- 20 years data retention

SOFTWARE FEATURES

- Input Data Format
  - 1-byte Command code
- Block Lock protection
  - The BP0~BP2 status bit defines the size of the area to be software protected against Program and Erase instructions
- Auto Erase and Auto Program Algorithms
  - Automatically erases and verifies data at selected sector
  - Automatically programs and verifies data at selected page by an internal algorithm that automatically times the program pulse widths (Any page to be programed should have page in the erased state first)
- Status Register Feature
- Electronic Identification
  - JEDEC 2-byte Device ID
  - RES command, 1-byte Device ID
- Support Serial Flash Discoverable Parameters (SFDP) mode

HARDWARE FEATURES

- PACKAGE
  - 8-pin SOP (150mil)
  - 8-pin SOP (200mil)
  - 8-pin PDIP (300mil)
  - 8-land WSON (6x5mm, 0.8mm package height)
  - 8-land USON (2x3x0.6mm)
  - **All devices are RoHS Compliant and Halogen-free**

GENERAL DESCRIPTION

The device features a serial peripheral interface and software protocol allowing operation on a simple 3-wire bus. The four bus signals are a clock input (SCLK), a serial data input (SI), a serial data output (SO), and a chip select (CS#). Serial access to the device is enabled by CS# input.

When it is in Dual Output read mode, the SI and SO pins become SIO0 and SIO1 pins for data output.

The device provides sequential read operation on whole chip.

After program/erase command is issued, auto program/erase algorithms which program/erase and verify the specified page or sector/block locations will be executed. Program command is executed on byte basis, or page basis, or word basis for erase command is executes on sector, or block, or whole chip basis.

To provide user with ease of interface, a status register is included to indicate the status of the chip. The status read command can be issued to detect completion status of a program or erase operation via WIP bit.

When the device is not in operation and CS# is high, it is put in standby mode.

The device utilizes Macronix's proprietary memory cell, which reliably stores memory contents even after 100,000 program and erase cycles.

PIN CONFIGURATIONS

8-PIN SOP (150/200mil)

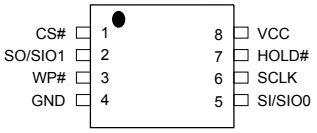

8-PIN PDIP (300mil)

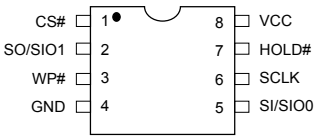

8-LAND, WSON (6x5mm)

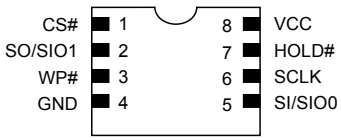

8-LAND USON (2x3mm)

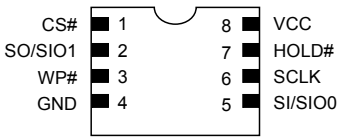

PIN DESCRIPTION

SYMBOL	DESCRIPTION
CS#	Chip Select
SI/SIO0	Serial Data Input (for 1 x I/O) / Serial Data Input & Output (for Dual Output mode)
SO/SIO1	Serial Data Output (for 1 x I/O) / Serial Data Output (for Dual Output mode)
SCLK	Clock Input
WP#	Write Protection
HOLD#	Hold, to pause the device without deselecting the device
VCC	+ 3.3V Power Supply
GND	Ground

BLOCK DIAGRAM

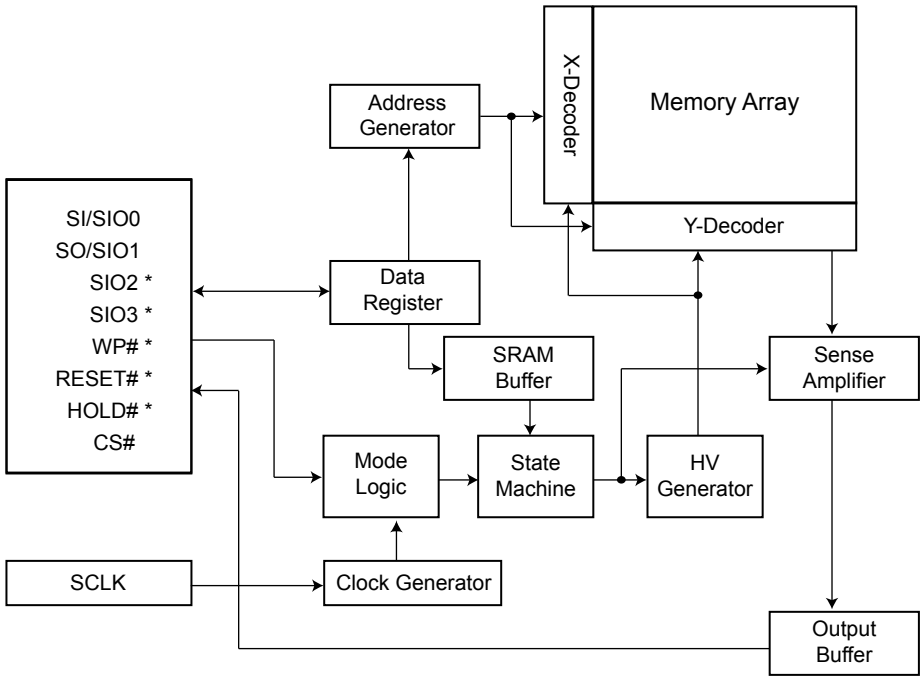

* Depends on part number options.

MEMORY ORGANIZATION

Table 1. Memory Organization

Block	Sector	Address Range	
7	127	07F000h	07FFFFh
	:	:	:
	112	070000h	070FFFh
6	111	06F000h	06FFFFh
	:	:	:
	96	060000h	060FFFh
5	95	05F000h	05FFFFh
	:	:	:
	80	050000h	050FFFh
4	79	04F000h	04FFFFh
	:	:	:
	64	040000h	040FFFh
3	63	03F000h	03FFFFh
	:	:	:
	48	030000h	030FFFh
2	47	02F000h	02FFFFh
	:	:	:
	32	020000h	020FFFh
1	31	01F000h	01FFFFh
	:	:	:
	16	010000h	010FFFh
0	15	00F000h	00FFFFh
	:	:	:
	3	003000h	003FFFh
	2	002000h	002FFFh
	1	001000h	001FFFh
	0	000000h	000FFFh

DEVICE OPERATION

1. Before a command is issued, status register should be checked to ensure device is ready for the intended operation.

2. When incorrect command is inputted to this LSI, this LSI becomes standby mode and keeps the standby mode until next CS# falling edge. In standby mode, SO pin of this LSI should be High-Z. The CS# falling time needs to follow tCHCL spec.

3. When correct command is inputted to this LSI, this LSI becomes active mode and keeps the active mode until next CS# rising edge. The CS# rising time needs to follow tCLCH spec.

4. Input data is latched on the rising edge of Serial Clock(SCLK) and data shifts out on the falling edge of SCLK. The difference of serial peripheral interface mode 0 and mode 3 is shown as Figure 1.

5. For the following instructions: RDID, RDSR, READ, FAST_READ, RDSFDP, DREAD, RES and REMS the shifted-in instruction sequence is followed by a data-out sequence. After any bit of data being shifted out, the CS# can be high. For the following instructions: WREN, WRDI, WRSR, SE, BE, CE, PP, RDP and DP the CS# must go high exactly at the byte boundary; otherwise, the instruction will be rejected and not executed.

6. During the progress of Write Status Register, Program, Erase operation, to access the memory array is neglected and not affect the current operation of Write Status Register, Program, Erase.

Figure 1. Serial Peripheral Interface Modes Supported

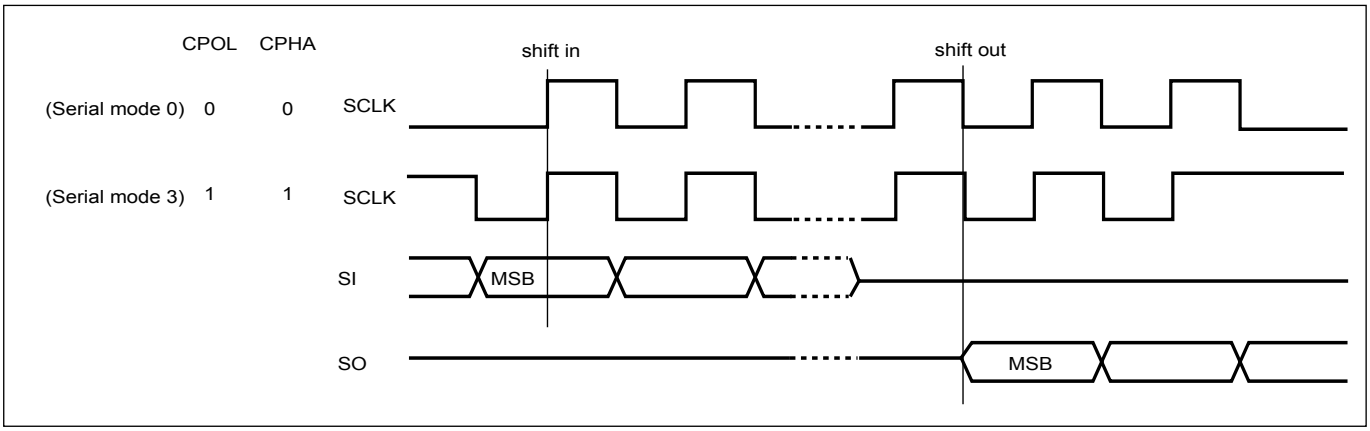

Note:
CPOL indicates clock polarity of serial master, CPOL=1 for SCLK high while idle, CPOL=0 for SCLK low while not transmitting. CPHA indicates clock phase. The combination of CPOL bit and CPHA bit decides which serial mode is supported.

DATA PROTECTION

During power transition, there may be some false system level signals which result in inadvertent erasure or programming. The device is designed to protect itself from these accidental write cycles.

The state machine will be reset as standby mode automatically during power up. In addition, the control register architecture of the device constrains that the memory contents can only be changed after specific command sequences have completed successfully.

In the following, there are several features to protect the system from the accidental write cycles during VCC power-up and power-down or from system noise.

- Valid command length checking: The command length will be checked whether it is at byte base and completed on byte boundary.

- Write Enable (WREN) command: WREN command is required to set the Write Enable Latch bit (WEL) before other command to change data. The WEL bit will return to reset stage under following situation:
  - Power-up
  - Write Disable (WRDI) command completion
  - Write Status Register (WRSR) command completion
  - Page Program (PP) command completion
  - Sector Erase (SE) command completion
  - Block Erase (BE) command completion
  - Chip Erase (CE) command completion

- Deep Power Down Mode: By entering deep power down mode, the flash device also is under protected from writing all commands except Release from deep power down mode command (RDP) and Read Electronic Signature command (RES).

I. Block lock protection

- Software Protection Mode (SPM): by using BP0-BP2 bits to set the part of Flash protected from data change.

- Hardware Protection Mode (HPM): by using WP# going low to protect the BP0-BP2 bits and SRWD bit from data change.

Table 2. Protected Area Sizes

Status bit			Protect level	4Mb
BP2	BP1	BP0		
0	0	0	0 (none)	None
0	0	1	1 (1 block)	Block 7
0	1	0	2 (2 blocks)	Block 6-7
0	1	1	3 (4 blocks)	Block 4-7
1	0	0	4 (8 blocks)	All
1	0	1	5 (All)	All
1	1	0	6 (All)	All
1	1	1	7 (All)	All

HOLD FEATURE

HOLD# pin signal goes low to hold any serial communications with the device. The HOLD feature will not stop the operation of write status register, programming, or erasing in progress.

The operation of HOLD requires Chip Select (CS#) keeping low and starts on falling edge of HOLD# pin signal while Serial Clock (SCLK) signal is being low (if Serial Clock signal is not being low, HOLD operation will not start until Serial Clock signal being low). The HOLD condition ends on the rising edge of HOLD# pin signal while Serial Clock(SCLK) signal is being low (if Serial Clock signal is not being low, HOLD operation will not end until Serial Clock being low).

Figure 2. Hold Condition Operation

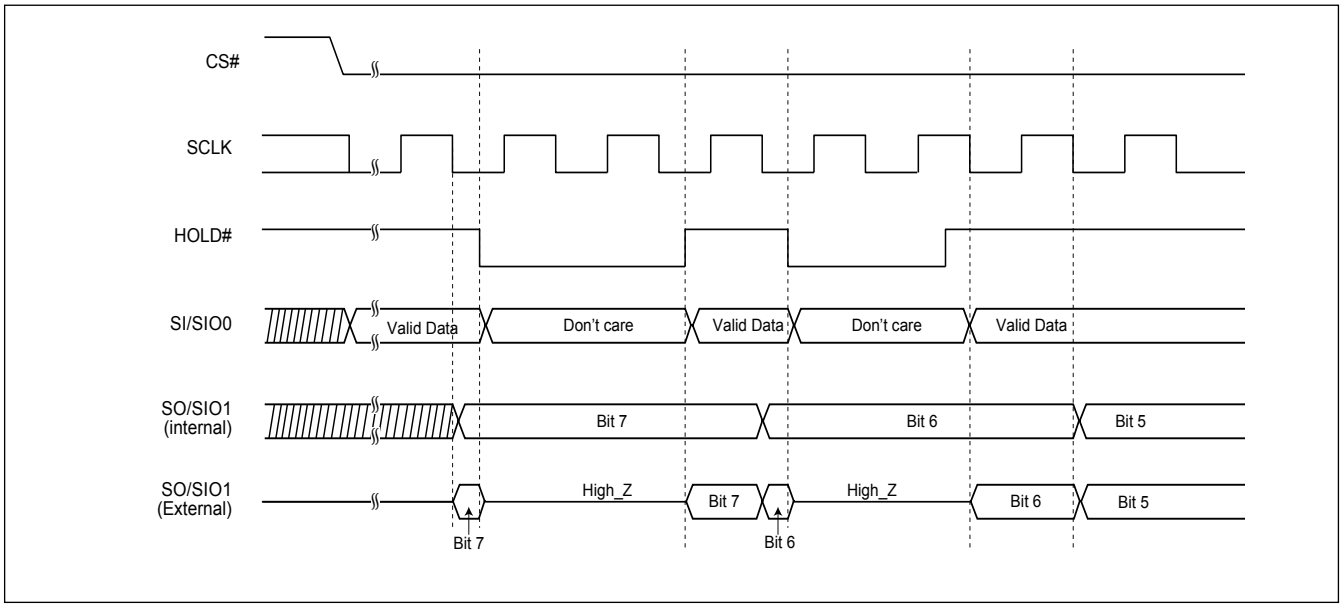

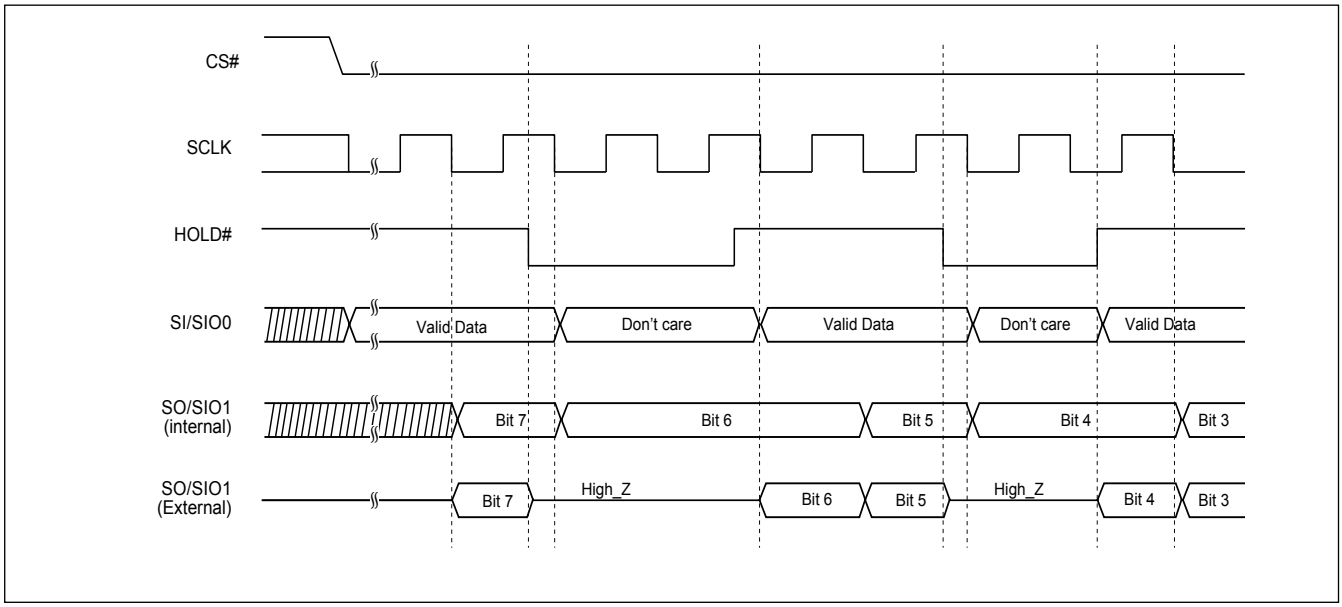

During the HOLD operation, the Serial Data Output (SO) is high impedance when Hold# pin goes low and will keep high impedance until Hold# pin goes high and SCLK goes low. The Serial Data Input (SI) is don't care if both Serial Clock (SCLK) and Hold# pin goes low and will keep the state until SCLK goes low and Hold# pin goes high. If Chip Select (CS#) drives high during HOLD operation, it will reset the internal logic of the device. To re-start communication with chip, the HOLD# must be at high and CS# must be at low.

Note: The HOLD feature is disabled during Quad I/O mode.

Table 3. Command Definition

COMMAND (byte)	WREN (write Enable)	WRDI (write disable)	WRSR (write status register)	RDID (read identification)	RDSR (read status register)	READ (read data)	Fast Read (fast read data)
1st	06 Hex	04 Hex	01 Hex	9F Hex	05 Hex	03 Hex	0B Hex
2nd						AD1	AD1
3rd						AD2	AD2
4th						AD3	AD3
5th							Dummy
Action	sets the (WEL) write enable latch bit	reset the (WEL) write enable latch bit	to write new status register	output the manufacturer ID and 2-byte device ID	to read out the status register	n bytes read out until CS# goes high	n bytes read out until CS# goes high

COMMAND (byte)	RDSFDP (Read SFDP)	RES (Read Electronic ID)	REMS (Read Electronic Manufacturer & Device ID)	DREAD (Double Output Mode command)	SE (Sector Erase)	BE (Block Erase)	CE (Chip Erase)
1st	5A Hex	AB Hex	90 Hex	3B Hex	20 Hex	52 or D8 Hex	60 or C7 Hex
2nd	AD1	x	x	AD1	AD1	AD1	
3rd	AD2	x	x	AD2	AD2	AD2	
4th	AD3	x	ADD(1)	AD3	AD3	AD3	
5th	Dummy			Dummy			
Action	Read SFDP mode	to read out 1-byte Device ID	Output the manufacturer ID and device ID	n bytes read out by Dual Output until CS# goes high	to erase the selected sector	to erase the selected block	to erase whole chip

COMMAND (byte)	PP (Page Program)	DP (Deep Power Down)	RDP (Release from Deep Power-down)
1st	02 Hex	B9 Hex	AB Hex
2nd	AD1		
3rd	AD2		
4th	AD3		
5th			
Action	to program the selected page	enters deep power down mode	release from deep power down mode

(1) ADD=00H will output the manufacturer's ID first and ADD=01H will output device ID first.

(2) It is not recommended to adopt any other code which is not in the above command definition table.

COMMAND DESCRIPTION

(1) Write Enable (WREN)

The Write Enable (WREN) instruction is for setting Write Enable Latch (WEL) bit. For those instructions like PP, SE, BE, CE, and WRSR, which are intended to change the device content, should be set every time after the WREN instruction setting the WEL bit.

The sequence is shown as *Figure 11*.

(2) Write Disable (WRDI)

The Write Disable (WRDI) instruction is for resetting Write Enable Latch (WEL) bit.

The sequence is shown as *Figure 12*.

The WEL bit is reset by following situations:
- Power-up
- Write Disable (WRDI) instruction completion
- Write Status Register (WRSR) instruction completion
- Page Program (PP) instruction completion
- Sector Erase (SE) instruction completion
- Block Erase (BE) instruction completion
- Chip Erase (CE) instruction completion

(3) Read Status Register (RDSR)

The RDSR instruction is for reading Status Register Bits. The Read Status Register can be read at any time (even in program/erase/write status register condition) and continuously. It is recommended to check the Write in Progress (WIP) bit before sending a new instruction when a program, erase, or write status register operation is in progress.

The sequence is shown as *Figure 13*.

The definition of the status register bits is as below:

WIP bit. The Write in Progress (WIP) bit, a volatile bit, indicates whether the device is busy in program/erase/write status register progress. When WIP bit sets to 1, which means the device is busy in program/erase/write status register progress. When WIP bit sets to 0, which means the device is not in progress of program/erase/write status register cycle.

WEL bit. The Write Enable Latch (WEL) bit, a volatile bit, indicates whether the device is set to internal write enable latch. When WEL bit sets to 1, which means the internal write enable latch is set, the device can accept program/erase/write status register instruction. When WEL bit sets to 0, which means no internal write enable latch; the device will not accept program/erase/write status register instruction.

BP2, BP1, BP0 bits. The Block Protect (BP2, BP1, BP0) bits, non-volatile bits, indicate the protected area(as defined in table 2) of the device to against the program/erase instruction without hardware protection mode being set. To write the Block Protect (BP2, BP1, BP0) bits requires the Write Status Register (WRSR) instruction to be executed. Those bits define the protected area of the memory to against Page Program (PP), Sector Erase (SE), Block Erase (BE) and Chip Erase(CE) instructions (only if all Block Protect bits set to 0, the CE instruction can be executed)

SRWD bit. The Status Register Write Disable (SRWD) bit, non-volatile bit, is operated together with Write Protection (WP#) pin for providing hardware protection mode. The hardware protection mode requires SRWD sets to 1 and WP# pin signal is low stage. In the hardware protection mode, the Write Status Register (WRSR) instruction is no longer accepted for execution and the SRWD bit and Block Protect bits (BP2, BP1, BP0) are read only.

bit 7	bit 6	bit 5	bit 4	bit 3	bit 2	bit 1	bit 0
SRWD Status Register Write Protect	0	0	BP2 (the level of protected block)	BP1 (the level of protected block)	BP0 (the level of protected block)	WEL (write enable latch)	WIP (write in progress bit)
1= status register write disable	0	0	(note 1)	(note 1)	(note 1)	1=write enable 0=not write enable	1=write operation 0=not in write operation

Note:
1. See the table "Protected Area Sizes".

(4) Write Status Register (WRSR)

The WRSR instruction is for changing the values of Status Register Bits. Before sending WRSR instruction, the Write Enable (WREN) instruction must be decoded and executed to set the Write Enable Latch (WEL) bit in advance. The WRSR instruction can change the value of Block Protect (BP2, BP1, BP0) bits to define the protected area of memory (as shown in table 2). The WRSR also can set or reset the Status Register Write Disable (SRWD) bit in accordance with Write Protection (WP#) pin signal. The WRSR instruction cannot be executed once the Hardware Protected Mode (HPM) is entered.

The sequence is shown as *Figure 14*.

The WRSR instruction has no effect on b6, b5, b1, b0 of the status register.

The CS# must go high exactly at the byte boundary; otherwise, the instruction will be rejected and not executed. The self-timed Write Status Register cycle time (tW) is initiated as soon as Chip Select (CS#) goes high. The Write in Progress (WIP) bit still can be check out during the Write Status Register cycle is in progress. The WIP sets 1 during the tW timing, and sets 0 when Write Status Register Cycle is completed, and the Write Enable Latch (WEL) bit is reset.

Table 4. Protection Modes

Mode	Status register condition	WP# and SRWD bit status	Memory
Software protection mode (SPM)	Status register can be written in (WEL bit is set to "1") and the SRWD, BP2-BP0 bits can be changed	WP#=1 and SRWD bit=0, or WP#=0 and SRWD bit=0, or WP#=1 and SRWD=1	The protected area cannot be program or erase.
Hardware protection mode (HPM)	The SRWD, BP2-BP0 of status register bits cannot be changed	WP#=0, SRWD bit=1	The protected area cannot be program or erase.

Note:
1. As defined by the values in the Block Protect (BP2, BP1, BP0) bits of the Status Register, as shown in *Table 2*.

As the above table showing, the summary of the Software Protected Mode (SPM) and Hardware Protected Mode (HPM).

Software Protected Mode (SPM):
- When SRWD bit=0, no matter WP# is low or high, the WREN instruction may set the WEL bit and can change the values of SRWD, BP2, BP1, BP0. The protected area, which is defined by BP2, BP1, BP0, is at software protected mode (SPM).
- When SRWD bit=1 and WP# is high, the WREN instruction may set the WEL bit can change the values of SRWD, BP2, BP1, BP0. The protected area, which is defined by BP2, BP1, BP0, is at software protected mode (SPM).

Note: *If SRWD bit=1 but WP# is low, it is impossible to write the Status Register even if the WEL bit has previously been set. It is rejected to write the Status Register and not be executed.*

Hardware Protected Mode (HPM):
- When SRWD bit=1, and then WP# is low (or WP# is low before SRWD bit=1), it enters the hardware protected mode (HPM). The data of the protected area is protected by software protected mode by BP2, BP1, BP0 and hardware protected mode by the WP# to against data modification.

Note: *to exit the hardware protected mode requires WP# driving high once the hardware protected mode is entered. If the WP# pin is permanently connected to high, the hardware protected mode can never be entered; only can use software protected mode via BP2, BP1, BP0.*

(5) Read Data Bytes (READ)

The read instruction is for reading data out. The address is latched on rising edge of SCLK, and data shifts out on the falling edge of SCLK at a maximum frequency fR. The first address byte can be at any location. The address is automatically increased to the next higher address after each byte data is shifted out, so the whole memory can be read out at a single READ instruction. The address counter rolls over to 0 when the highest address has been reached.

The sequence is shown as *Figure 15*.

(6) Read Data Bytes at Higher Speed (FAST_READ)

The FAST_READ instruction is for quickly reading data out. The address is latched on rising edge of SCLK, and data of each bit shifts out on the falling edge of SCLK at a maximum frequency fC. The first address byte can be at any location. The address is automatically increased to the next higher address after each byte data is shifted out, so the whole memory can be read out at a single FAST_READ instruction. The address counter rolls over to 0 when the highest address has been reached.

The sequence is shown as *Figure 16*.

While Program/Erase/Write Status Register cycle is in progress, FAST_READ instruction is rejected without any impact on the Program/Erase/Write Status Register current cycle.

(7) Dual Output Mode (DREAD)

The DREAD instruction enable double throughput of Serial Flash in read mode. The address is latched on rising edge of SCLK, and data of every two bits(interleave on 1I/2O pins) shift out on the falling edge of SCLK at a maximum frequency fT. The first address byte can be at any location. The address is automatically increased to the next higher address after each byte data is shifted out, so the whole memory can be read out at a single DREAD instruction. The address counter rolls over to 0 when the highest address has been reached. Once writing DREAD instruction, the following address/dummy/data out will perform as 2-bit instead of previous 1-bit.

The sequence is shown as *Figure 17*.

While Program/Erase/Write Status Register cycle is in progress, DREAD instruction is rejected without any impact on the Program/Erase/Write Status Register current cycle.

The DREAD only perform read operation. Program/Erase /Read ID/Read status....operation do not support DREAD throughputs.

(8) Sector Erase (SE)

The Sector Erase (SE) instruction is for erasing the data of the chosen sector to be "1". A Write Enable (WREN) instruction must execute to set the Write Enable Latch (WEL) bit before sending the Sector Erase (SE). Any address of the sector (see table 1) is a valid address for Sector Erase (SE) instruction. The CS# must go high exactly at the byte boundary (the latest eighth of address byte been latched-in); otherwise, the instruction will be rejected and not executed.

Address bits [Am-A12] (Am is the most significant address) select the sector address.

The sequence is shown as *Figure 18*.

The self-timed Sector Erase Cycle time (tSE) is initiated as soon as Chip Select (CS#) goes high. The Write in Progress (WIP) bit still can be check out during the Sector Erase cycle is in progress. The WIP sets 1 during the tSE timing, and sets 0 when Sector Erase Cycle is completed, and the Write Enable Latch (WEL) bit is reset. If the page is protected by BP2, BP1, BP0 bits, the Sector Erase (SE) instruction will not be executed on the page.

(9) Block Erase (BE)

The Block Erase (BE) instruction is for erasing the data of the chosen block to be "1". A Write Enable (WREN) instruction must execute to set the Write Enable Latch (WEL) bit before sending the Block Erase (BE). Any address of the block (see table 1) is a valid address for Block Erase (BE) instruction. The CS# must go high exactly at the byte boundary (the latest eighth of address byte been latched-in); otherwise, the instruction will be rejected and not executed.

The sequence is shown as *Figure 19*.

The self-timed Block Erase Cycle time (tBE) is initiated as soon as Chip Select (CS#) goes high. The Write in Progress (WIP) bit still can be check out during the Sector Erase cycle is in progress. The WIP sets 1 during the tBE timing, and sets 0 when Sector Erase Cycle is completed, and the Write Enable Latch (WEL) bit is reset. If the page is protected by BP2, BP1, BP0 bits, the Block Erase (BE) instruction will not be executed on the page.

(10) Chip Erase (CE)

The Chip Erase (CE) instruction is for erasing the data of the whole chip to be "1". A Write Enable (WREN) instruction must execute to set the Write Enable Latch (WEL) bit before sending the Chip Erase (CE). Any address of the sector (see table 1) is a valid address for Chip Erase (CE) instruction. The CS# must go high exactly at the byte boundary(the latest eighth of address byte been latched-in); otherwise, the instruction will be rejected and not executed.

The sequence is shown as *Figure 20*.

The self-timed Chip Erase Cycle time (tCE) is initiated as soon as Chip Select (CS#) goes high. The Write in Progress (WIP) bit still can be check out during the Chip Erase cycle is in progress. The WIP sets 1 during the tCE timing, and sets 0 when Chip Erase Cycle is completed, and the Write Enable Latch (WEL) bit is reset. If the chip is protected by BP2, BP1, BP0 bits, the Chip Erase (CE) instruction will not be executed. It will be only executed when BP2, BP1, BP0 all set to "0".

(11) Page Program (PP)

The Page Program (PP) instruction is for programming the memory to be "0". A Write Enable (WREN) instruction must execute to set the Write Enable Latch (WEL) bit before sending the Page Program (PP). The device programs only the last 256 data bytes sent to the device. The last address byte (the 8 least significant address bits, A7-A0) should be set to 0 for 256 bytes page program. If A7-A0 are not all zero, transmitted data that exceed page length are programmed from the starting address (24-bit address that last 8 bit are all 0) of currently selected page. If the data bytes sent to the device exceeds 256, the last 256 data byte is programmed at the request page and previous data will be disregarded. If the data bytes sent to the device has not exceeded 256, the data will be programmed at the request address of the page. There will be no effort on the other data bytes of the same page.

The sequence is shown as *Figure 21*.

The CS# must be kept to low during the whole Page Program cycle; The CS# must go high exactly at the byte boundary(the latest eighth bit of data being latched in), otherwise the instruction will be rejected and will not be executed.

The self-timed Page Program Cycle time (tPP) is initiated as soon as Chip Select (CS#) goes high. The Write in Progress (WIP) bit still can be check out during the Page Program cycle is in progress. The WIP sets 1 during the tPP timing, and sets 0 when Page Program Cycle is completed, and the Write Enable Latch (WEL) bit is reset. If the page is protected by BP2, BP1, BP0 bits, the Page Program (PP) instruction will not be executed.

(12) Deep Power-down (DP)

The Deep Power-down (DP) instruction is for setting the device on the minimizing the power consumption (to entering the Deep Power-down mode), the standby current is reduced from ISB1 to ISB2). The Deep Power-down mode requires the Deep Power-down (DP) instruction to enter, during the Deep Power-down mode, the device is not active and all Write/Program/Erase instruction are ignored. When CS# goes high, it's only in standby mode not deep power-down mode. It's different from Standby mode.

The sequence is shown as *Figure 22*.

Once the DP instruction is set, all instruction will be ignored except the Release from Deep Power-down mode (RDP) and Read Electronic Signature (RES) instruction. (RES instruction to allow the ID been read out). When Power-down, the deep power-down mode automatically stops, and when power-up, the device automatically is in standby mode. For RDP instruction the CS# must go high exactly at the byte boundary (the latest eighth bit of instruction code been latched-in); otherwise, the instruction will not executed. As soon as Chip Select (CS#) goes high, a delay of tDP is required before entering the Deep Power-down mode and reducing the current to ISB2.

(13) Release from Deep Power-down (RDP), Read Electronic Signature (RES)

The Release from Deep Power-down (RDP) instruction is terminated by driving Chip Select (CS#) High. When Chip Select (CS#) is driven High, the device is put in the Stand-by Power mode. If the device was not previously in the Deep Power-down mode, the transition to the Stand-by Power mode is immediate. If the device was previously in the Deep Power-down mode, though, the transition to the Stand-by Power mode is delayed by tRES2, and Chip Select (CS#) must remain High for at least tRES2(max), as specified in *Table 7*. Once in the Stand-by Power mode, the device waits to be selected, so that it can receive, decode and execute instructions.

RES instruction is for reading out the old style of 8-bit Electronic Signature, whose values are shown as table of ID Definitions. This is not the same as RDID instruction. It is not recommended to use for new design. For new deisng, please use RDID instruction. Even in Deep power-down mode, the RDP and RES are also allowed to be executed, only except the device is in progress of program/erase/write cycle; there's no effect on the current program/erase/write cycle in progress.

The sequence is shown as *Figure 23* and *Figure 24*.

The RES instruction is ended by CS# goes high after the ID been read out at least once. The ID outputs repeatedly if continuously send the additional clock cycles on SCLK while CS# is at low. If the device was not previously in Deep Power-down mode, the device transition to standby mode is immediate. If the device was previously in Deep Power-down mode, there's a delay of tRES2 to transit to standby mode, and CS# must remain to high at least tRES2(max). Once in the standby mode, the device waits to be selected, so it can be receive, decode, and execute instruction.

The RDP instruction is for releasing from Deep Power Down Mode.

(14) Read Identification (RDID)

The RDID instruction is for reading the manufacturer ID of 1-byte and followed by Device ID of 2-byte. The Macronix Manufacturer ID is C2(hex), the memory type ID is 20(hex) as the first-byte device ID, and the individual device ID of second-byte ID is as followings: 13(hex) for MX25L4006E.

The sequence is shown as *Figure 25*.

While Program/Erase operation is in progress, it will not decode the RDID instruction, so there's no effect on the cycle of program/erase operation which is currently in progress. When CS# goes high, the device is at standby stage.

(15) Read Electronic Manufacturer ID & Device ID (REMS)

The REMS instruction is an alternative to the Release from Power-down/Device ID instruction that provides both the JEDEC assigned manufacturer ID and the specific device ID.

The REMS instruction is very similar to the Release from Power-down/Device ID instruction. The instruction is initiated by driving the CS# pin low and shift the instruction code "90h" followed by two dummy bytes and one bytes address (A7~A0). After which, the Manufacturer ID for Macronix (C2h) and the Device ID are shifted out on the falling edge of SCLK with most significant bit (MSB) first as shown in *Figure 26*. The Device ID values are listed in Table 5. ID Definitions. If the one-byte address is initially set to 01h, then the device ID will be read first and then followed by the Manufacturer ID. The Manufacturer and Device IDs can be read continuously, alternating from one to the other. The instruction is completed by driving CS# high.

Table 5. ID Definitions

Command Type	MX25L4006E		
RDID Command	manufacturer ID	memory type	memory density
	C2	20	13
RES Command	electronic ID		
	12		
REMS Command	manufacturer ID		device ID
	C2		12

(16) Read SFDP Mode (RDSFDP)

The Serial Flash Discoverable Parameter (SFDP) standard provides a consistent method of describing the functional and feature capabilities of serial flash devices in a standard set of internal parameter tables. These parameter tables can be interrogated by host system software to enable adjustments needed to accommodate divergent features from multiple vendors. The concept is similar to the one found in the Introduction of JEDEC Standard, JESD68 on CFI.

The sequence of issuing RDSFDP instruction is CS# goes low→send RDSFDP instruction (5Ah)→send 3 address bytes on SI pin→send 1 dummy byte on SI pin→read SFDP code on SO→to end RDSFDP operation can use CS# to high at any time during data out.

SFDP is a JEDEC Standard, JESD216.

Read Serial Flash Discoverable Parameter (RDSFDP) Sequence

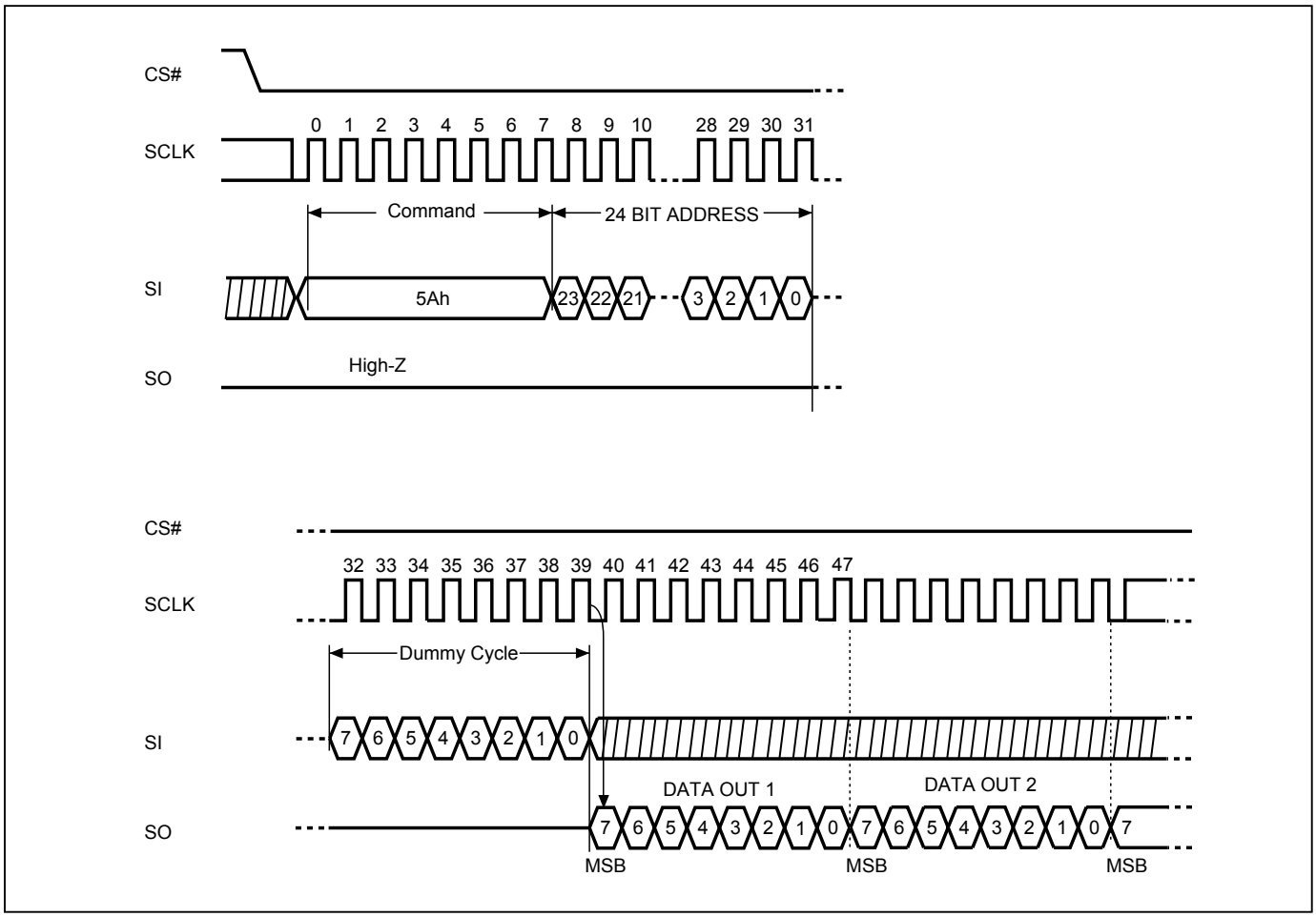

Table 6. Signature and Parameter Identification Data Values

SFDP Table below is for MX25L4006EM1I-12G, MX25L4006EM2I-12G, MX25L4006EPI-12G, MX25L4006EZNI-12G and MX25L4006EZUI-12G

Description	Comment	Add (h) (Byte)	DW Add (Bit)	Data (h/b) (Note1)	Data (h)
SFDP Signature	Fixed: 50444653h	00h	07:00	53h	53h
		01h	15:08	46h	46h
		02h	23:16	44h	44h
		03h	31:24	50h	50h
SFDP Minor Revision Number	Start from 00h	04h	07:00	00h	00h
SFDP Major Revision Number	Start from 01h	05h	15:08	01h	01h
Number of Parameter Headers	This number is 0-based. Therefore, 0 indicates 1 parameter header.	06h	23:16	01h	01h
Unused		07h	31:24	FFh	FFh
ID number (JEDEC)	00h: it indicates a JEDEC specified header.	08h	07:00	00h	00h
Parameter Table Minor Revision Number	Start from 00h	09h	15:08	00h	00h
Parameter Table Major Revision Number	Start from 01h	0Ah	23:16	01h	01h
Parameter Table Length (in double word)	How many DWORDs in the Parameter table	0Bh	31:24	09h	09h
Parameter Table Pointer (PTP)	First address of JEDEC Flash Parameter table	0Ch	07:00	30h	30h
		0Dh	15:08	00h	00h
		0Eh	23:16	00h	00h
Unused		0Fh	31:24	FFh	FFh
ID number (Macronix manufacturer ID)	it indicates Macronix manufacturer ID	10h	07:00	C2h	C2h
Parameter Table Minor Revision Number	Start from 00h	11h	15:08	00h	00h
Parameter Table Major Revision Number	Start from 01h	12h	23:16	01h	01h
Parameter Table Length (in double word)	How many DWORDs in the Parameter table	13h	31:24	04h	04h
Parameter Table Pointer (PTP)	First address of Macronix Flash Parameter table	14h	07:00	60h	60h
		15h	15:08	00h	00h
		16h	23:16	00h	00h
Unused		17h	31:24	FFh	FFh

Table 7. Parameter Table (0): JEDEC Flash Parameter Tables

SFDP Table below is for MX25L4006EM1I-12G, MX25L4006EM2I-12G, MX25L4006EPI-12G, MX25L4006EZNI-12G and MX25L4006EZUI-12G

Description	Comment	Add (h) (Byte)	DW Add (Bit)	Data (h/b) (Note1)	Data (h)
Block/Sector Erase sizes	00: Reserved, 01: 4KB erase, 10: Reserved, 11: not support 4KB erase	30h	01:00	01b	E5h
Write Granularity	0: 1Byte, 1: 64Byte or larger		02	1b	
Write Enable Instruction Required for Writing to Volatile Status Registers	0: not required 1: required 00h to be written to the status register		03	0b	
Write Enable Opcode Select for Writing to Volatile Status Registers	0: use 50h opcode, 1: use 06h opcode Note: If target flash status register is nonvolatile, then bits 3 and 4 must be set to 00b.		04	0b	
Unused	Contains 111b and can never be changed		07:05	111b	
4KB Erase Opcode		31h	15:08	20h	20h
(1-1-2) Fast Read (Note2)	0=not support 1=support	32h	16	1b	81h
Address Bytes Number used in addressing flash array	00: 3Byte only, 01: 3 or 4Byte, 10: 4Byte only, 11: Reserved		18:17	00b	
Double Transfer Rate (DTR) Clocking	0=not support 1=support		19	0b	
(1-2-2) Fast Read	0=not support 1=support		20	0b	
(1-4-4) Fast Read	0=not support 1=support		21	0b	
(1-1-4) Fast Read	0=not support 1=support		22	0b	
Unused			23	1b	
Unused		33h	31:24	FFh	FFh
Flash Memory Density		37h:34h	31:00	003F FFFFh	
(1-4-4) Fast Read Number of Wait states (Note3)	0 0000b: Wait states (Dummy Clocks) not support	38h	04:00	0 0000b	00h
(1-4-4) Fast Read Number of Mode Bits (Note4)	000b: Mode Bits not support		07:05	000b	
(1-4-4) Fast Read Opcode		39h	15:08	FFh	FFh
(1-1-4) Fast Read Number of Wait states	0 0000b: Wait states (Dummy Clocks) not support	3Ah	20:16	0 0000b	00h
(1-1-4) Fast Read Number of Mode Bits	000b: Mode Bits not support		23:21	000b	
(1-1-4) Fast Read Opcode		3Bh	31:24	FFh	FFh

SFDP Table below is for MX25L4006EM1I-12G, MX25L4006EM2I-12G, MX25L4006EPI-12G, MX25L4006EZNI-12G and MX25L4006EZUI-12G

Description	Comment	Add (h) (Byte)	DW Add (Bit)	Data (h/b) (Note1)	Data (h)
(1-1-2) Fast Read Number of Wait states	0 0000b: Wait states (Dummy Clocks) not support	3Ch	04:00	0 1000b	08h
(1-1-2) Fast Read Number of Mode Bits	000b: Mode Bits not support		07:05	000b	
(1-1-2) Fast Read Opcode		3Dh	15:08	3Bh	3Bh
(1-2-2) Fast Read Number of Wait states	0 0000b: Wait states (Dummy Clocks) not support	3Eh	20:16	0 0000b	00h
(1-2-2) Fast Read Number of Mode Bits	000b: Mode Bits not support		23:21	000b	
(1-2-2) Fast Read Opcode		3Fh	31:24	FFh	FFh
(2-2-2) Fast Read	0=not support 1=support	40h	00	0b	EEh
Unused			03:01	111b	
(4-4-4) Fast Read	0=not support 1=support		04	0b	
Unused			07:05	111b	
Unused		43h:41h	31:08	FFh	FFh
Unused		45h:44h	15:00	FFh	FFh
(2-2-2) Fast Read Number of Wait states	0 0000b: Wait states (Dummy Clocks) not support	46h	20:16	0 0000b	00h
(2-2-2) Fast Read Number of Mode Bits	000b: Mode Bits not support		23:21	000b	
(2-2-2) Fast Read Opcode		47h	31:24	FFh	FFh
Unused		49h:48h	15:00	FFh	FFh
(4-4-4) Fast Read Number of Wait states	0 0000b: Wait states (Dummy Clocks) not support	4Ah	20:16	0 0000b	00h
(4-4-4) Fast Read Number of Mode Bits	000b: Mode Bits not support		23:21	000b	
(4-4-4) Fast Read Opcode		4Bh	31:24	FFh	FFh
Sector Type 1 Size	Sector/block size = 2^N bytes (Note5) 0x00b: this sector type doesn't exist	4Ch	07:00	0Ch	0Ch
Sector Type 1 erase Opcode		4Dh	15:08	20h	20h
Sector Type 2 Size	Sector/block size = 2^N bytes 0x00b: this sector type doesn't exist	4Eh	23:16	10h	10h
Sector Type 2 erase Opcode		4Fh	31:24	D8h	D8h
Sector Type 3 Size	Sector/block size = 2^N bytes 0x00b: this sector type doesn't exist	50h	07:00	00h	00h
Sector Type 3 erase Opcode		51h	15:08	FFh	FFh
Sector Type 4 Size	Sector/block size = 2^N bytes 0x00b: this sector type doesn't exist	52h	23:16	00h	00h
Sector Type 4 erase Opcode		53h	31:24	FFh	FFh

Table 8. Parameter Table (1): Macronix Flash Parameter Tables

SFDP Table below is for MX25L4006EM1I-12G, MX25L4006EM2I-12G, MX25L4006EPI-12G, MX25L4006EZNI-12G and MX25L4006EZUI-12G

Description	Comment	Add (h) (Byte)	DW Add (Bit)	Data (h/b) (Note1)	Data (h)
Vcc Supply Maximum Voltage	2000h=2.000V 2700h=2.700V 3600h=3.600V	61h:60h	07:00 15:08	00h 36h	00h 36h
Vcc Supply Minimum Voltage	1650h=1.650V, 1750h=1.750V 2250h=2.250V, 2350h=2.350V 2650h=2.650V, 2700h=2.700V	63h:62h	23:16 31:24	00h 27h	00h 27h
H/W Reset# pin	0=not support 1=support	65h:64h	00	0b	4FF6h
H/W Hold# pin	0=not support 1=support		01	1b	
Deep Power Down Mode	0=not support 1=support		02	1b	
S/W Reset	0=not support 1=support		03	0b	
S/W Reset Opcode	Reset Enable (66h) should be issued before Reset Opcode		11:04	1111 1111b (FFh)	
Program Suspend/Resume	0=not support 1=support		12	0b	
Erase Suspend/Resume	0=not support 1=support		13	0b	
Unused			14	1b	
Wrap-Around Read mode	0=not support 1=support		15	0b	
Wrap-Around Read mode Opcode		66h	23:16	FFh	FFh
Wrap-Around Read data length	08h:support 8B wrap-around read 16h:8B&16B 32h:8B&16B&32B 64h:8B&16B&32B&64B	67h	31:24	FFh	FFh
Individual block lock	0=not support 1=support	6Bh:68h	00	0b	C7FEh
Individual block lock bit (Volatile/Nonvolatile)	0=Volatile 1=Nonvolatile		01	1b	
Individual block lock Opcode			09:02	1111 1111b (FFh)	
Individual block lock Volatile protect bit default protect status	0=protect 1=unprotect		10	1b	
Secured OTP	0=not support 1=support		11	0b	
Read Lock	0=not support 1=support		12	0b	
Permanent Lock	0=not support 1=support		13	0b	
Unused			15:14	11b	
Unused			31:16	FFh	FFh
Unused		6Fh:6Ch	31:00	FFh	FFh

Note 1: h/b is hexadecimal or binary.

Note 2: **(x-y-z)** means I/O mode nomenclature used to indicate the number of active pins used for the opcode (x), address (y), and data (z). At the present time, the only valid Read SFDP instruction modes are: (1-1-1), (2-2-2), and (4-4-4)

Note 3: **Wait States** is required dummy clock cycles after the address bits or optional mode bits.

Note 4: **Mode Bits** is optional control bits that follow the address bits. These bits are driven by the system controller if they are specified. (eg,read performance enhance toggling bits)

Note 5: 4KB=2^0Ch,32KB=2^0Fh,64KB=2^10h

Note 6: All unused and undefined area data is blank FFh for SFDP Tables that are defined in Parameter Identification Header. All other areas beyond defined SFDP Table are reserved by Macronix.

POWER-ON STATE

The device is at below states when power-up:
- Standby mode (please note it is not deep power-down mode)
- Write Enable Latch (WEL) bit is reset

The device must not be selected during power-up and power-down stage unless the VCC achieves below correct level:
- VCC minimum at power-up stage and then after a delay of tVSL
- GND at power-down

Please note that a pull-up resistor on CS# may ensure a safe and proper power-up/down level.

An internal power-on reset (POR) circuit may protect the device from data corruption and inadvertent data change during power up state.

For further protection on the device, if the VCC does not reach the VCC minimum level, the correct operation is not guaranteed. The write, read, erase, and program command should be sent after the below time delay:
- tVSL after VCC reached VCC minimum level

The device can accept read command after VCC reached VCC minimum and a time delay of tVSL.

Please refer to the figure of "power-up timing".

Note:
- To stabilize the VCC level, the VCC rail decoupled by a suitable capacitor close to package pins is recommended. (generally around 0.1uF)

ELECTRICAL SPECIFICATIONS

Absolute Maximum Ratings

RATING		VALUE
Ambient Operating Temperature	Industrial (I) grade	-40°C to 85°C
Storage Temperature		-55°C to 125°C
Applied Input Voltage		-0.5V to 4.6V
Applied Output Voltage		-0.5V to 4.6V
VCC to Ground Potential		-0.5V to 4.6V

Notes:

1. *Stresses greater than those listed under "Absolute Maximum Ratings" may cause permanent damage to the device. This is stress rating only and functional operational sections of this specification is not implied. Exposure to absolute maximum rating conditions for extended period may affect reliability.*
2. *Specifications contained within the following tables are subject to change.*
3. *During voltage transitions, all pins may overshoot to 4.6V or -0.5V for period up to 20ns.*
4. *All input and output pins may overshoot to VCC+0.5V while VCC+0.5V is smaller than or equal to 4.6V.*

Figure 3. Maximum Negative Overshoot Waveform

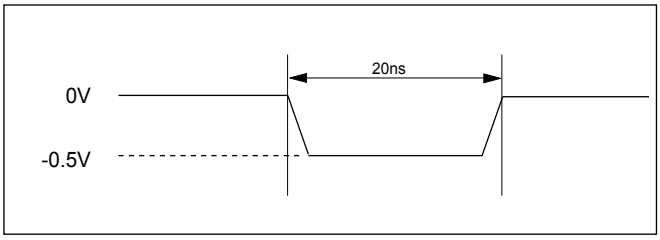

Figure 4. Maximum Positive Overshoot Waveform

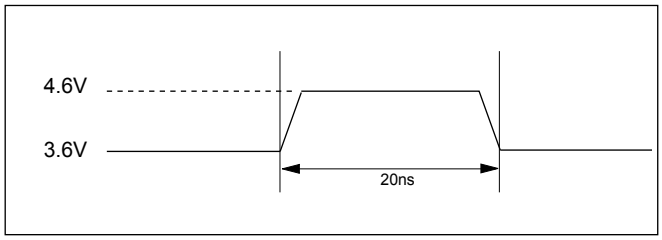

Capacitance TA = 25°C, f = 1.0 MHz

Symbol	Parameter	Min.	Typ.	Max.	Unit	Conditions
CIN	Input Capacitance			6	pF	VIN = 0V
COUT	Output Capacitance			8	pF	VOUT = 0V

Figure 5. Input Test Waveforms and Measurement Level

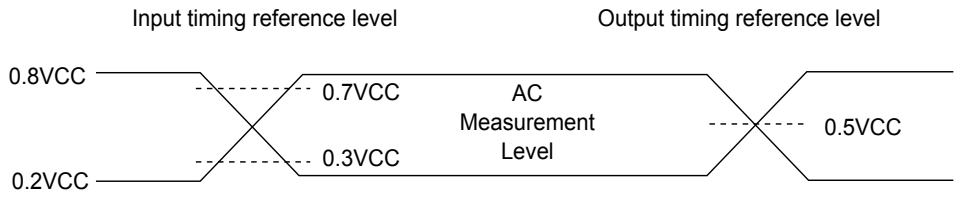

Note: Input pulse rise and fall time are <5ns

Figure 6. Output Loading

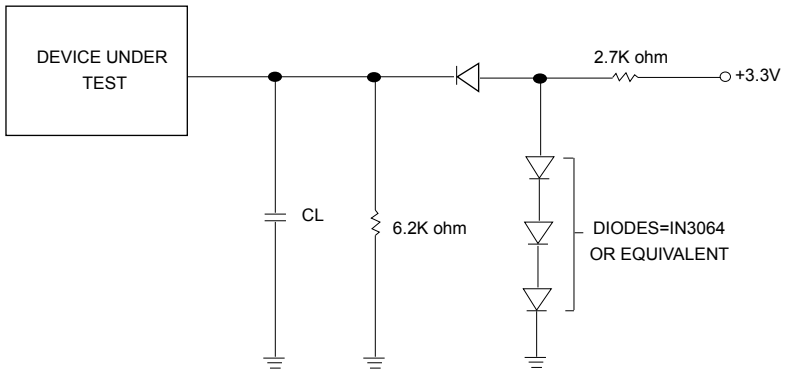

CL=30pF Including jig capacitance

Table 9. DC Characteristics (Temperature = -40°C to 85°C, VCC = 2.7V ~ 3.6V)

Symbol	Parameter	Notes	Min.	Typ.	Max.	Units	Test Conditions
ILI	Input Load Current	1			± 2	uA	VCC = VCC Max VIN = VCC or GND
ILO	Output Leakage Current	1			± 2	uA	VCC = VCC Max VOUT = VCC or GND
ISB1	VCC Standby Current	1		15	25	uA	VIN = VCC or GND CS# = VCC
ISB2	Deep Power-down Current			2	10	uA	VIN = VCC or GND CS# = VCC
ICC1	VCC Read	1			12	mA	f=86MHz SCLK=0.1VCC/0.9VCC, SO=Open
					12	mA	f=66MHz SCLK=0.1VCC/0.9VCC, SO=Open
					4	mA	f=33MHz SCLK=0.1VCC/0.9VCC, SO=Open
ICC2	VCC Program Current (PP)	1		15	20	mA	Program in Progress CS# = VCC
ICC3	VCC Write Status Register (WRSR) Current			3	15	mA	Program status register in progress, CS#=VCC
ICC4	VCC Sector Erase Current (SE)	1		9	15	mA	Erase in Progress, CS#=VCC
ICC5	VCC Chip Erase Current (CE)	1		15	20	mA	Erase in Progress, CS#=VCC
VIL	Input Low Voltage		-0.5		0.3VCC	V	
VIH	Input High Voltage		0.7VCC		VCC+0.4	V	
VOL	Output Low Voltage				0.4	V	IOL = 1.6mA
VOH	Output High Voltage		VCC-0.2			V	IOH = -100uA
VWI	Low VCC Write Inhibit Voltage	3	2.1	2.3	2.5	V	

Notes:

1. Typical values at VCC = 3.3V, T = 25°C. These currents are valid for all product versions (package and speeds).
2. Typical value is calculated by simulation.
3. Not 100% tested.

Table 10. AC Characteristics (Temperature = -40°C to 85°C, VCC = 2.7V ~ 3.6V)

Symbol	Alt.	Parameter		Min.	Typ.	Max.	Unit
fSCLK	fC	Clock Frequency for the following instructions: FAST_READ, RDSFDP, PP, SE, BE, CE, DP, RES, RDP, WREN, WRDI, RDID, RDSR, WRSR		DC		86	MHz
fRSCLK	fR	Clock Frequency for READ instructions		DC		33	MHz
fTSCLK	fT	Clock Frequency for DREAD instructions		DC		80	MHz
tCH(1)	tCLH	Clock High Time	@33MHz	13			ns
			@86MHz	5.5			ns
tCL(1)	tCLL	Clock Low Time	@33MHz	13			ns
			@86MHz	5.5			ns
tCLCH(2)		Clock Rise Time (3) (peak to peak)		0.1			V/ns
tCHCL(2)		Clock Fall Time (3) (peak to peak)		0.1			V/ns
tSLCH	tCSS	CS# Active Setup Time (relative to SCLK)		7			ns
tCHSL		CS# Not Active Hold Time (relative to SCLK)		7			ns
tDVCH	tDSU	Data In Setup Time		2			ns
tCHDX	tDH	Data In Hold Time		5			ns
tCHSH		CS# Active Hold Time (relative to SCLK)		7			ns
tSHCH		CS# Not Active Setup Time (relative to SCLK)		7			ns
tSHSL	tCSH	CS# Deselect Time	Read	15			ns
			Write	40			ns
tSHQZ(2)	tDIS	Output Disable Time				6	ns
tCLQV	tV	Clock Low to Output Valid	30pF			8	ns
			15pF			6	ns
tCLQX	tHO	Output Hold Time		0			ns
tHLCH		HOLD# Setup Time (relative to SCLK)		5			ns
tCHHH		HOLD# Hold Time (relative to SCLK)		5			ns
tHHCH		HOLD Setup Time (relative to SCLK)		5			ns
tCHHL		HOLD Hold Time (relative to SCLK)		5			ns
tHHQX(2)	tLZ	HOLD to Output Low-Z				6	ns
tHLQZ(2)	tHZ	HOLD# to Output High-Z				6	ns
tWHSL(4)		Write Protect Setup Time		20			ns
tSHWL(4)		Write Protect Hold Time		100			ns
tDP(2)		CS# High to Deep Power-down Mode				10	us
tRES1(2)		CS# High to Standby Mode without Electronic Signature Read				8.8	us
tRES2(2)		CS# High to Standby Mode with Electronic Signature Read				8.8	us
tW		Write Status Register Cycle Time			5	40	ms
tBP		Byte-Program			9	50	us
tPP		Page Program Cycle Time			0.6	3	ms
tSE		Sector Erase Cycle Time			40	200	ms
tBE		Block Erase Cycle Time			0.4	2	s
tCE		Chip Erase Cycle Time			1.7	4	s

Note:
1. tCH + tCL must be greater than or equal to 1/f (fC or fR).
2. Value guaranteed by characterization, not 100% tested in production.
3. Expressed as a slew-rate.
4. Only applicable as a constraint for a WRSR instruction when SRWD is set at 1.
5. Test condition is shown as Figure 5 & 6.
6. The CS# rising time needs to follow tCLCH spec and CS# falling time needs to follow tCHCL spec.

Table 11. Power-Up Timing

Symbol	Parameter	Min.	Max.	Unit
tVSL(1)	VCC(min) to CS# low	200		us

Note: *1. The parameter is characterized only.*

Initial Delivery State

The device is delivered with the memory array erased: all bits are set to 1 (each byte contains FFh).

Timing Analysis

Figure 7. Serial Input Timing

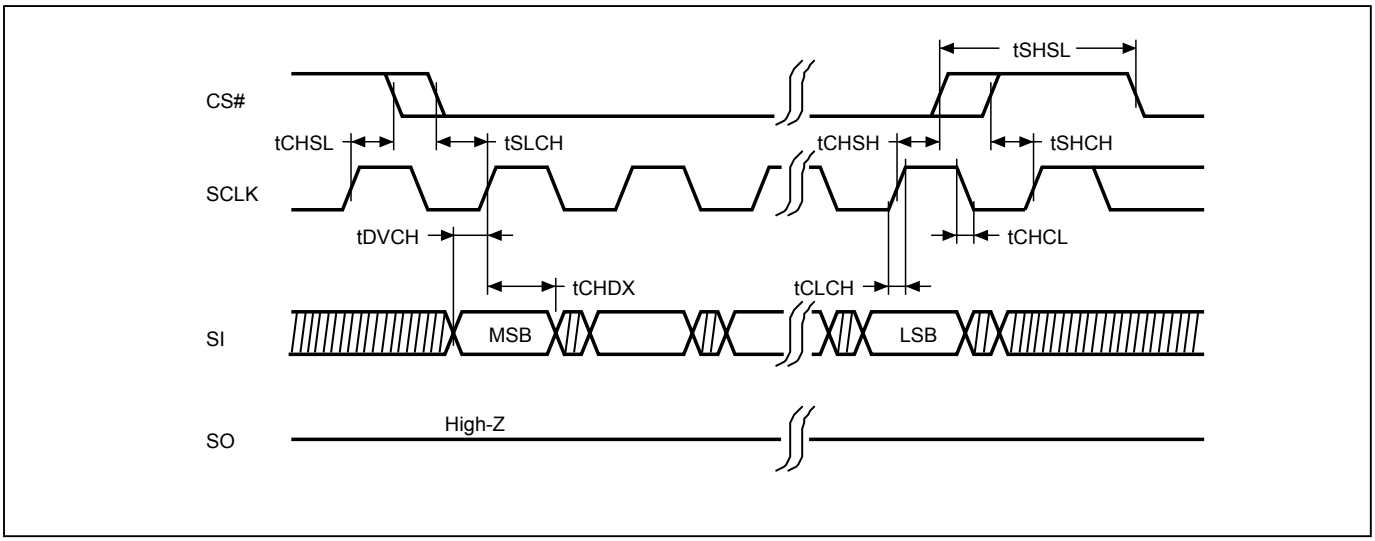

Figure 8. Output Timing

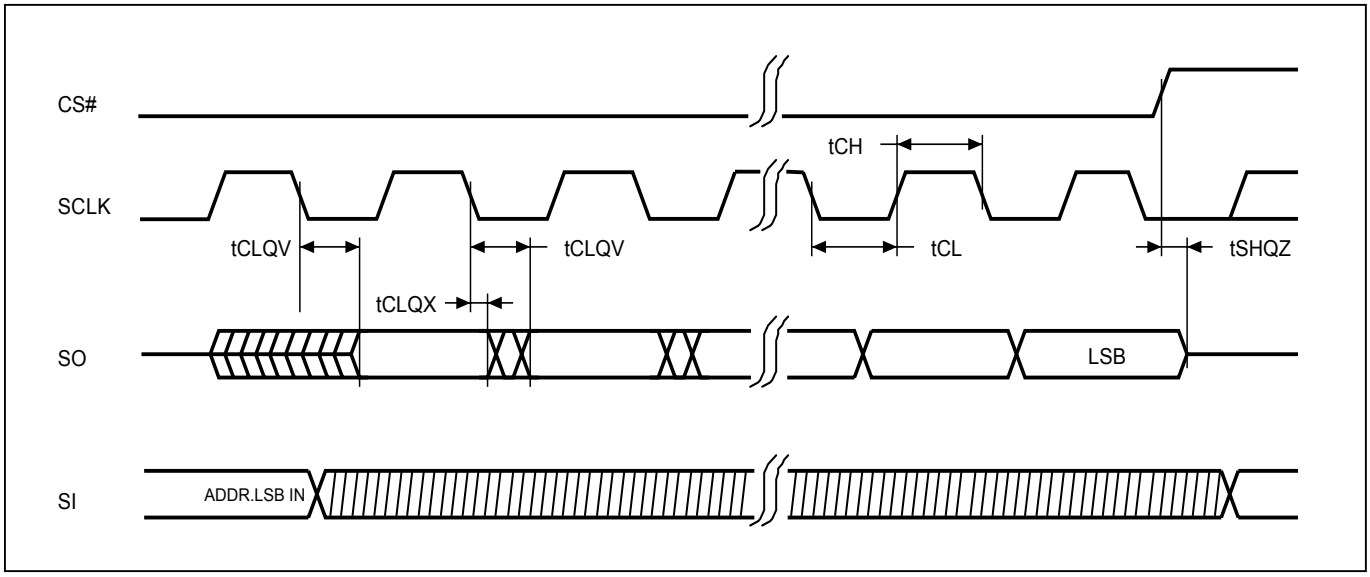

Figure 9. Hold Timing

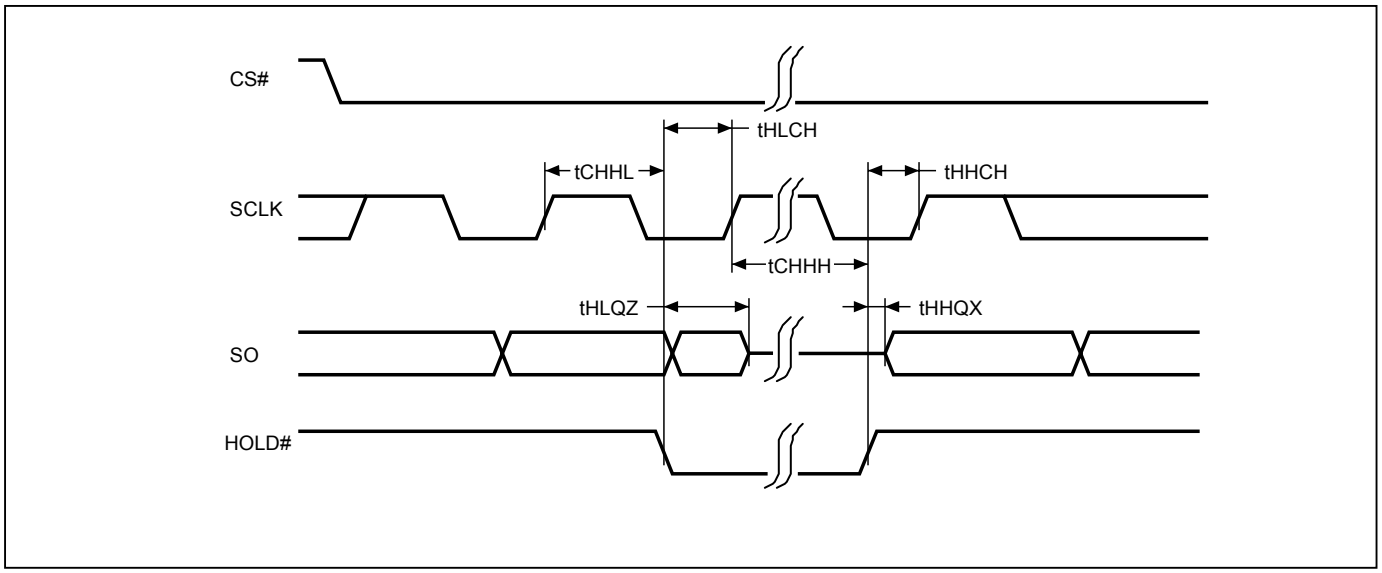

** SI is "don't care" during HOLD operation.*

Figure 10. WP# Disable Setup and Hold Timing during WRSR when SRWD=1

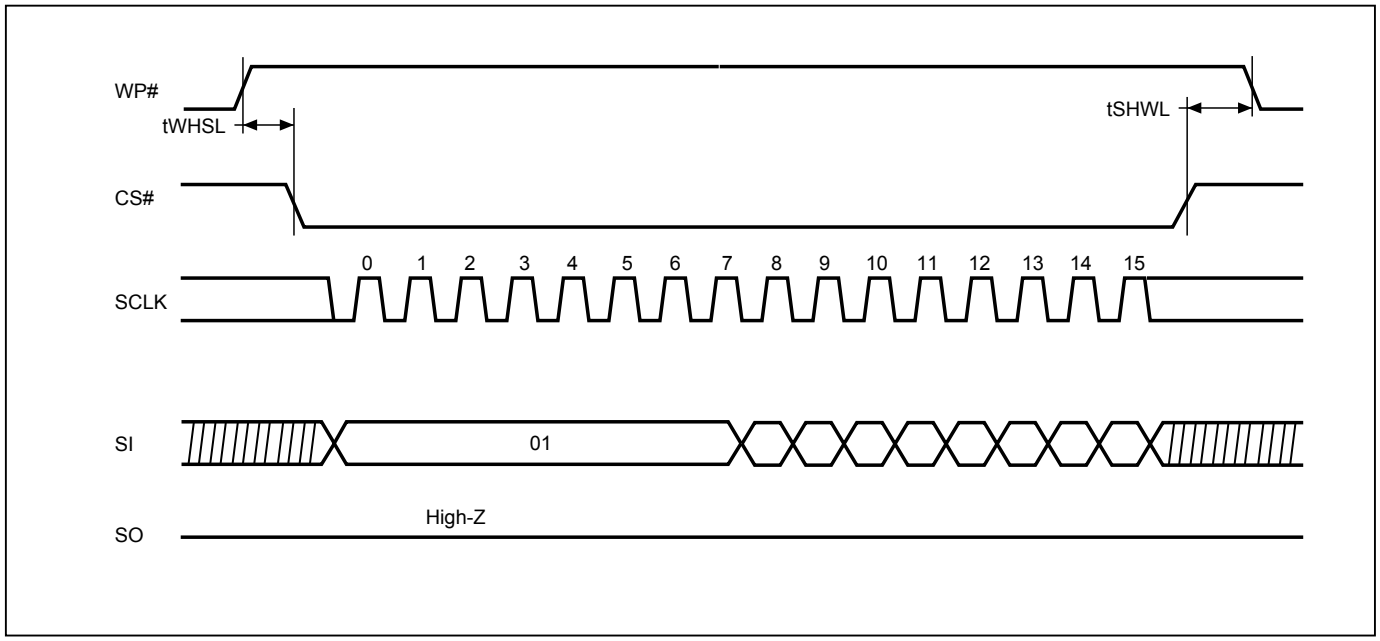

Figure 11. Write Enable (WREN) Sequence (Command 06)

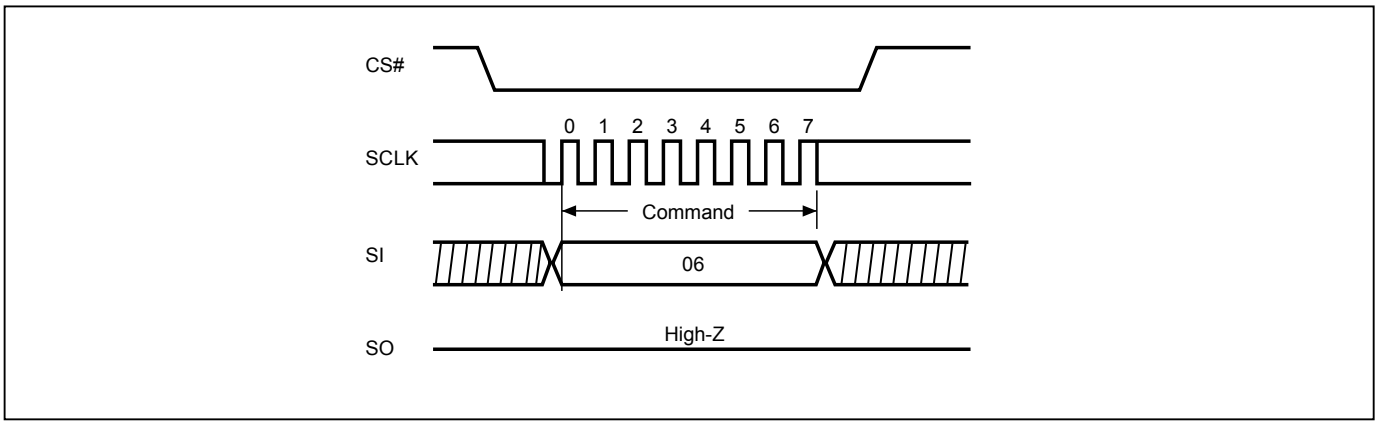

Figure 12. Write Disable (WRDI) Sequence (Command 04)

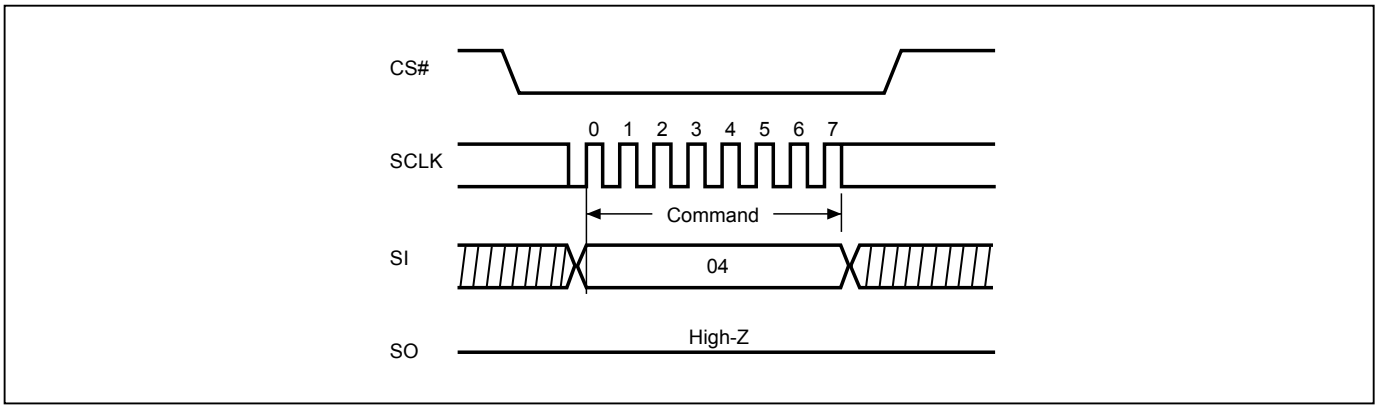

Figure 13. Read Status Register (RDSR) Sequence (Command 05)

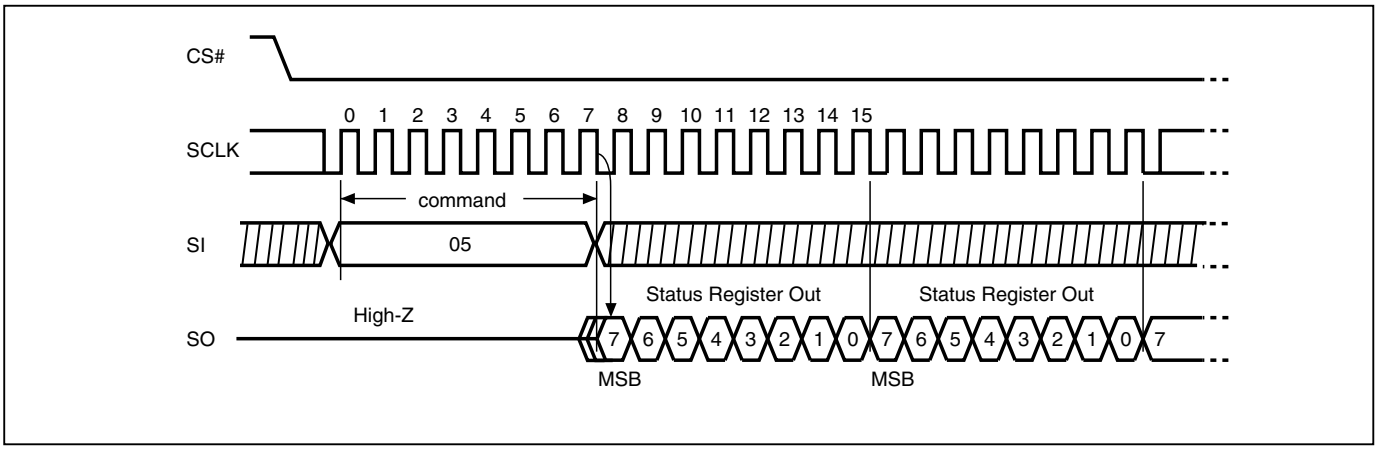

Figure 14. Write Status Register (WRSR) Sequence (Command 01)

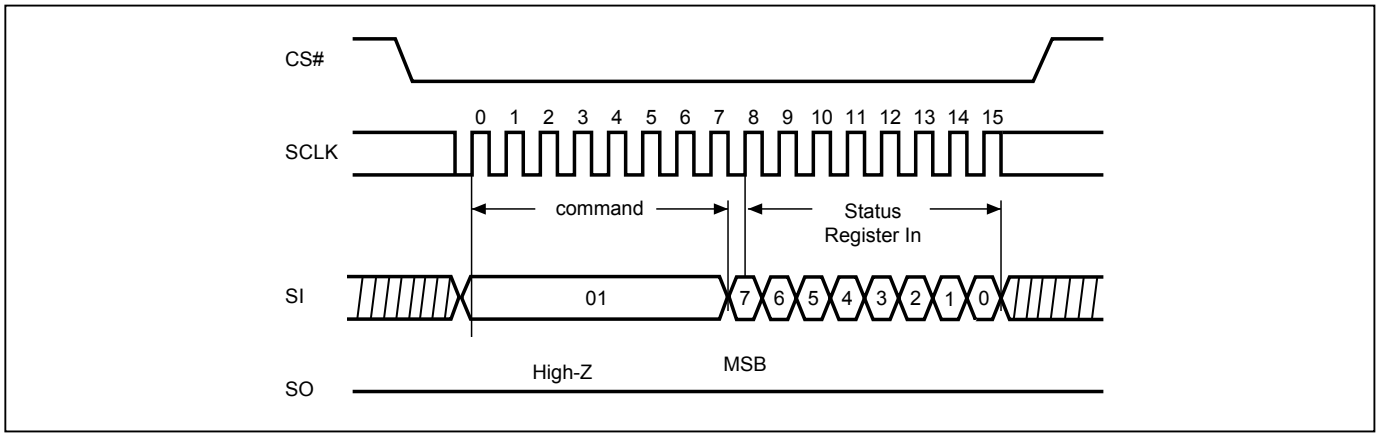

Figure 15. Read Data Bytes (READ) Sequence (Command 03)

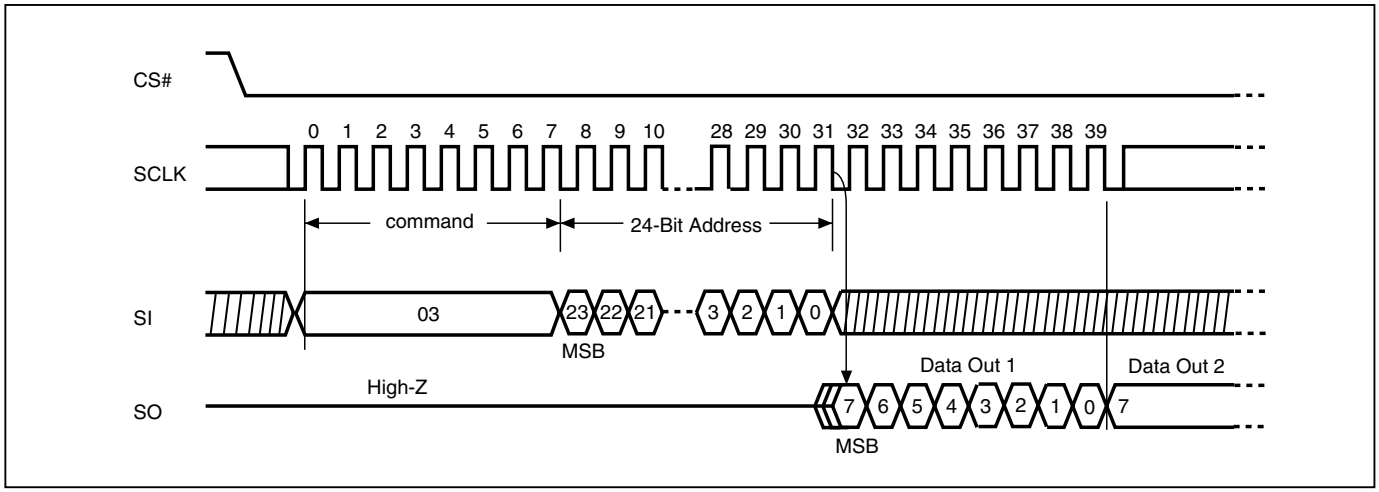

Figure 16. Read at Higher Speed (FAST_READ) Sequence (Command 0B)

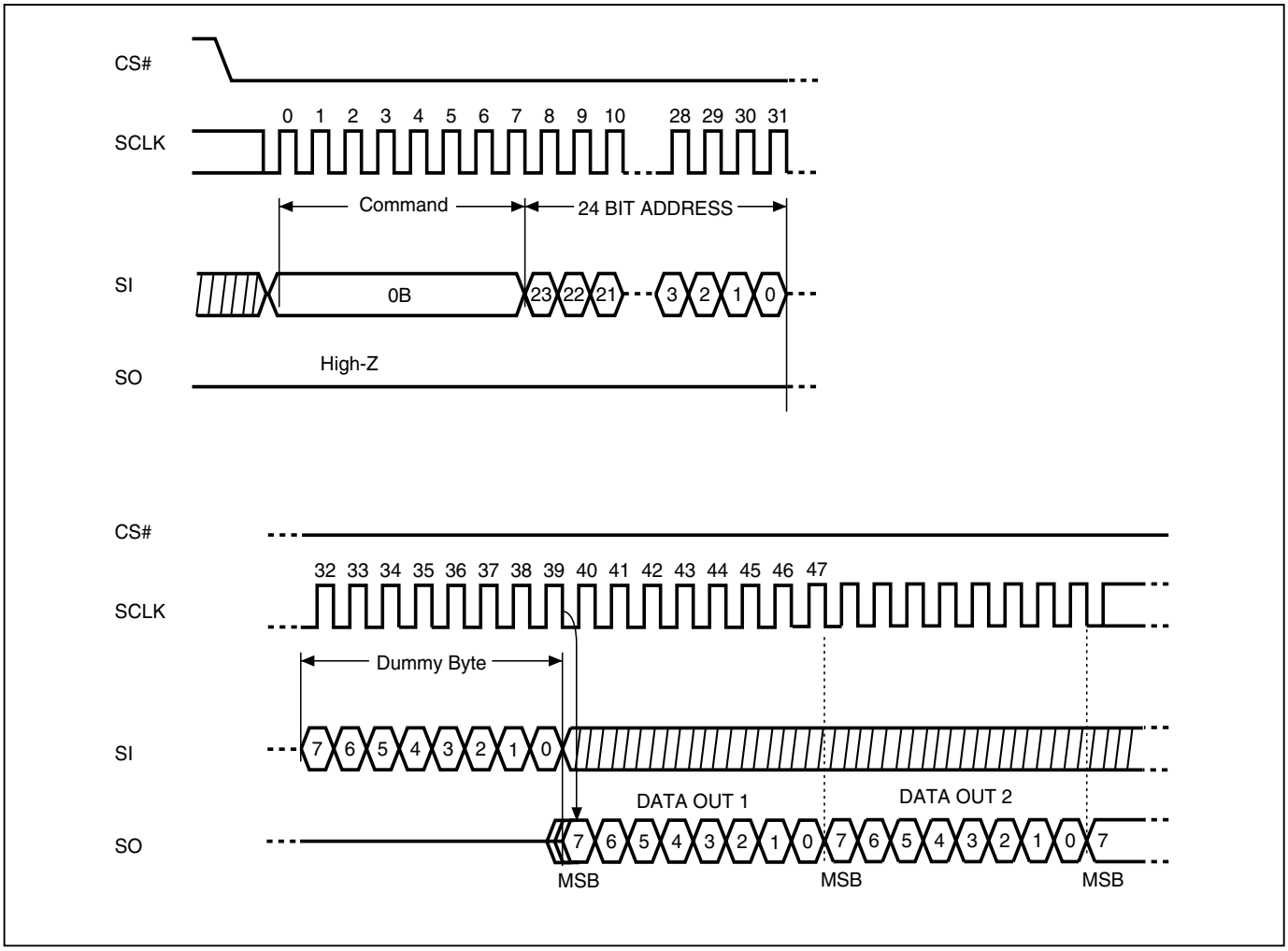

Figure 17. Dual Output Read Mode Sequence (Command 3B)

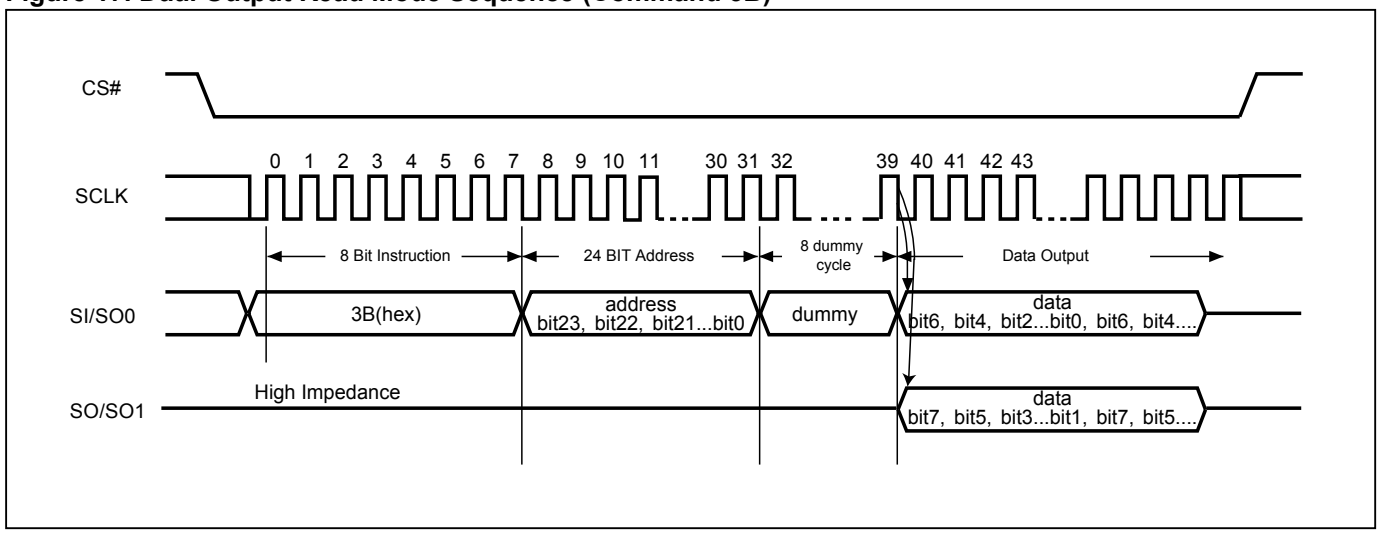

Figure 18. Sector Erase (SE) Sequence (Command 20)

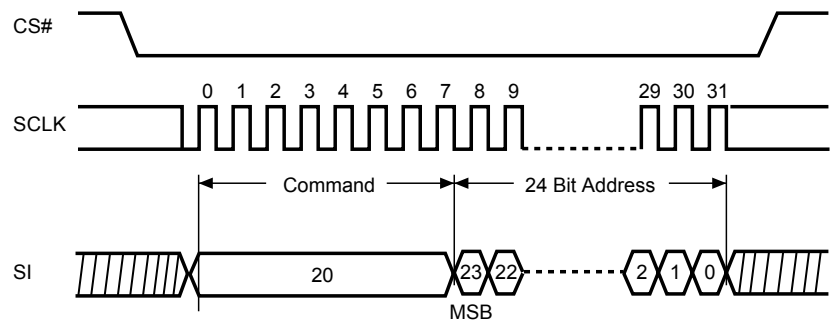

Note: *SE command is 20(hex).*

Figure 19. Block Erase (BE) Sequence (Command 52 or D8)

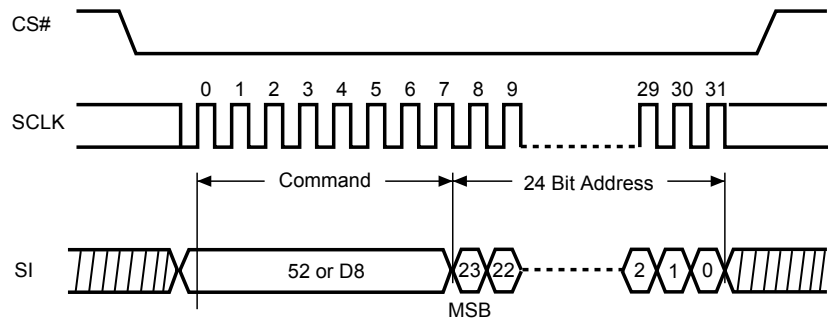

Note: *BE command is 52 or D8(hex).*

Figure 20. Chip Erase (CE) Sequence (Command 60 or C7)

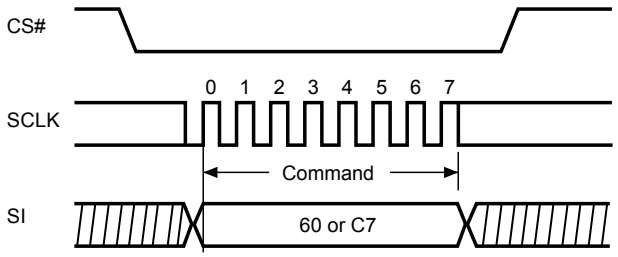

Note: *CE command is 60(hex) or C7(hex).*

Figure 21. Page Program (PP) Sequence (Command 02)

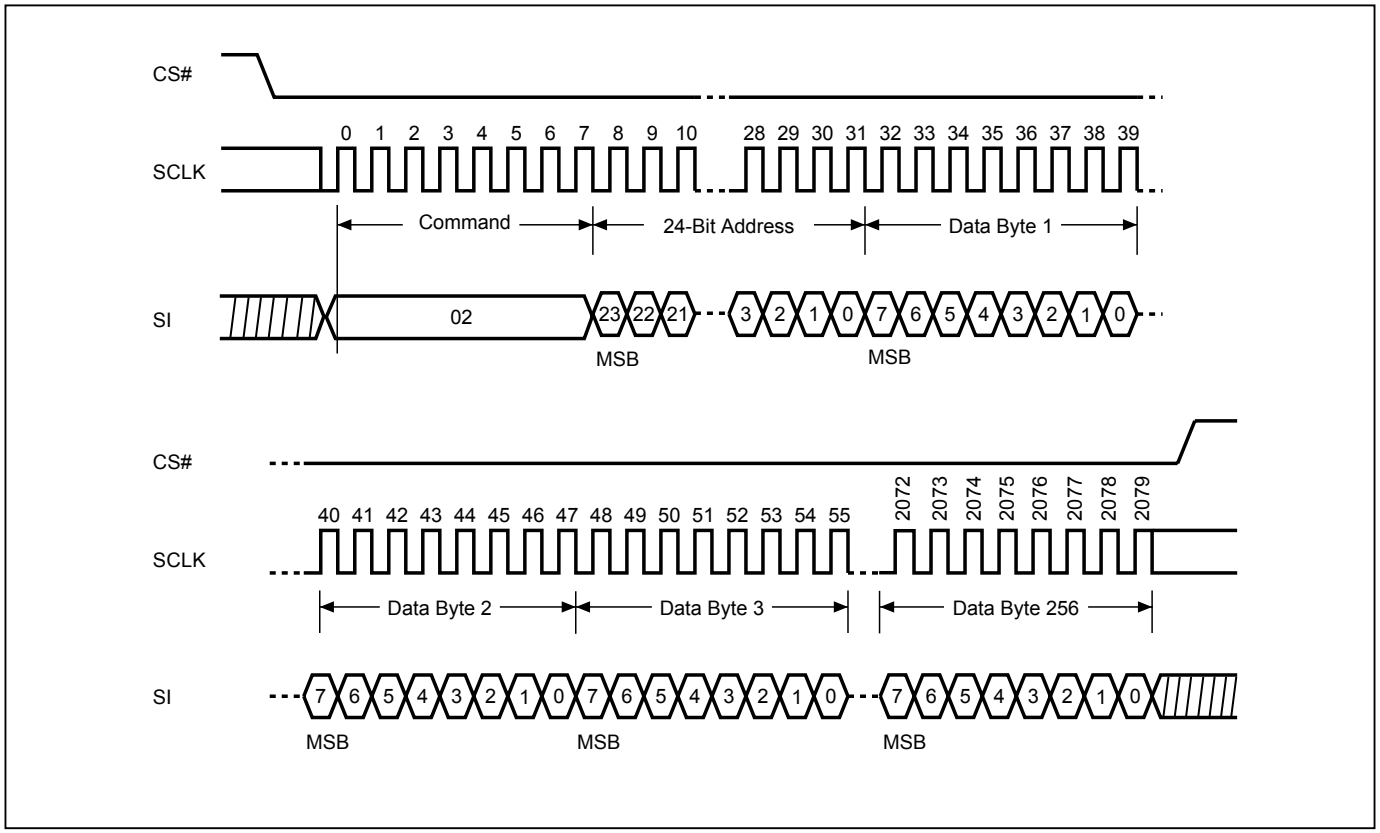

Figure 22. Deep Power-down (DP) Sequence (Command B9)

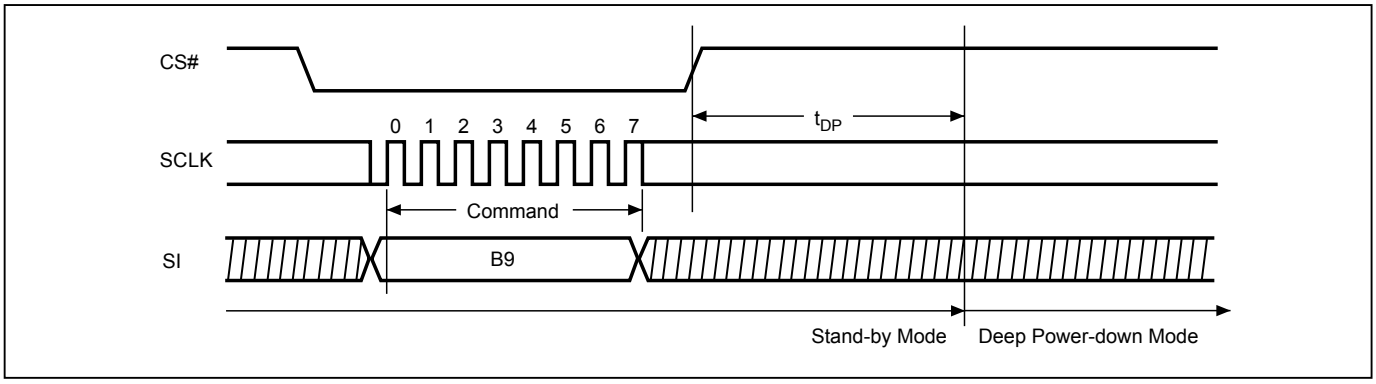

Figure 23. Read Electronic Signature (RES) Sequence (Command AB)

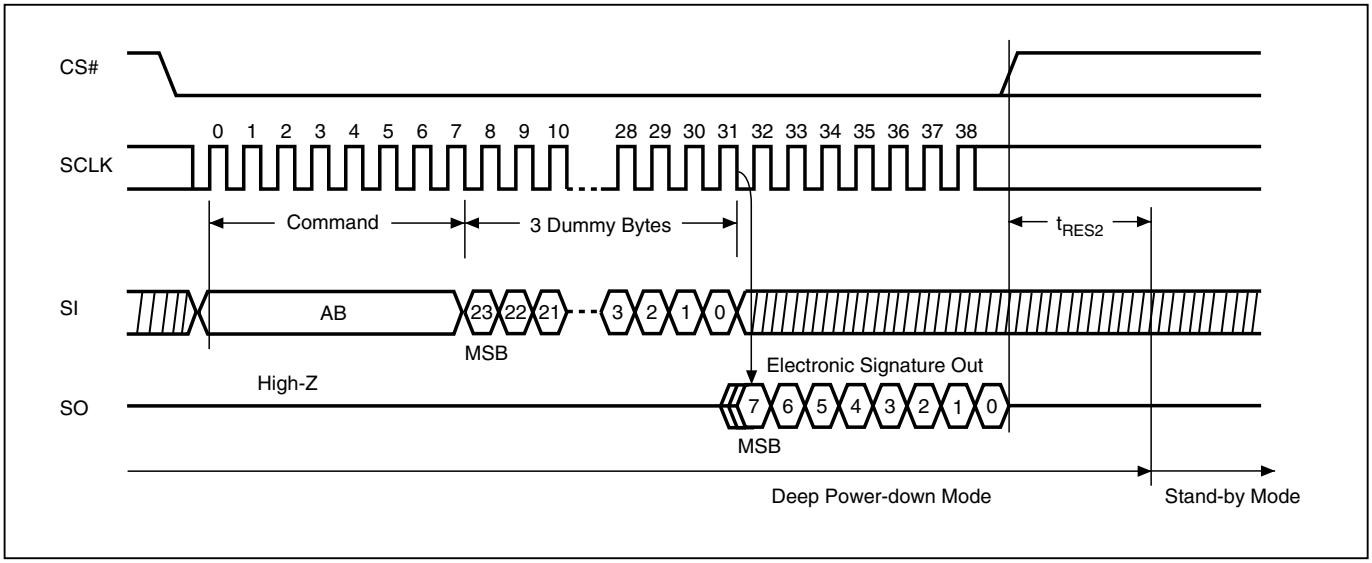

Figure 24. Release from Deep Power-down (RDP) Sequence (Command AB)

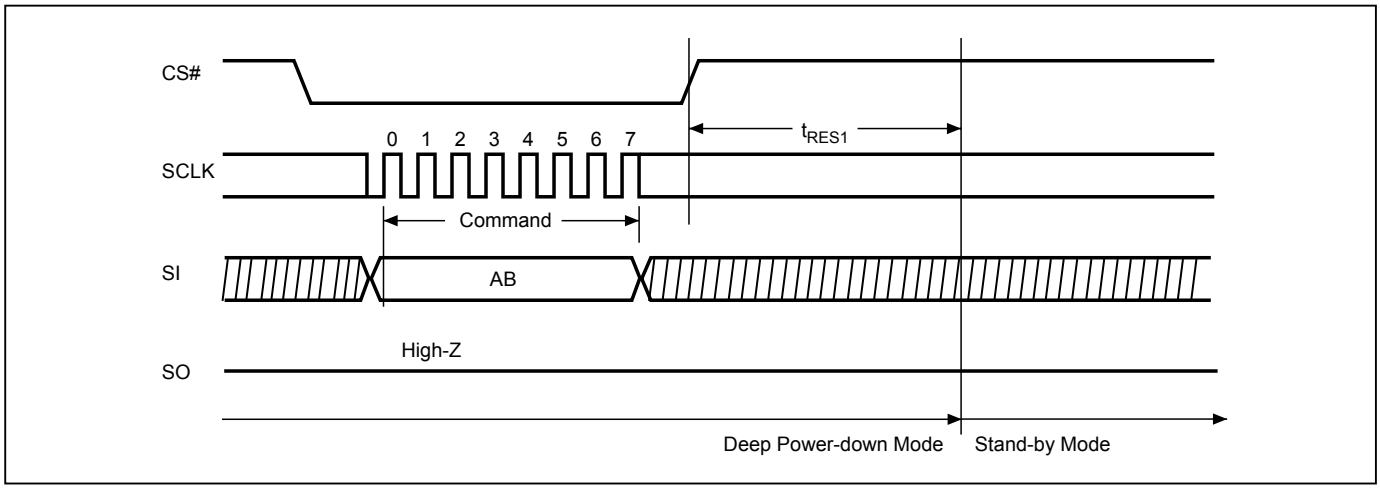

Figure 25. Read Identification (RDID) Sequence (Command 9F)

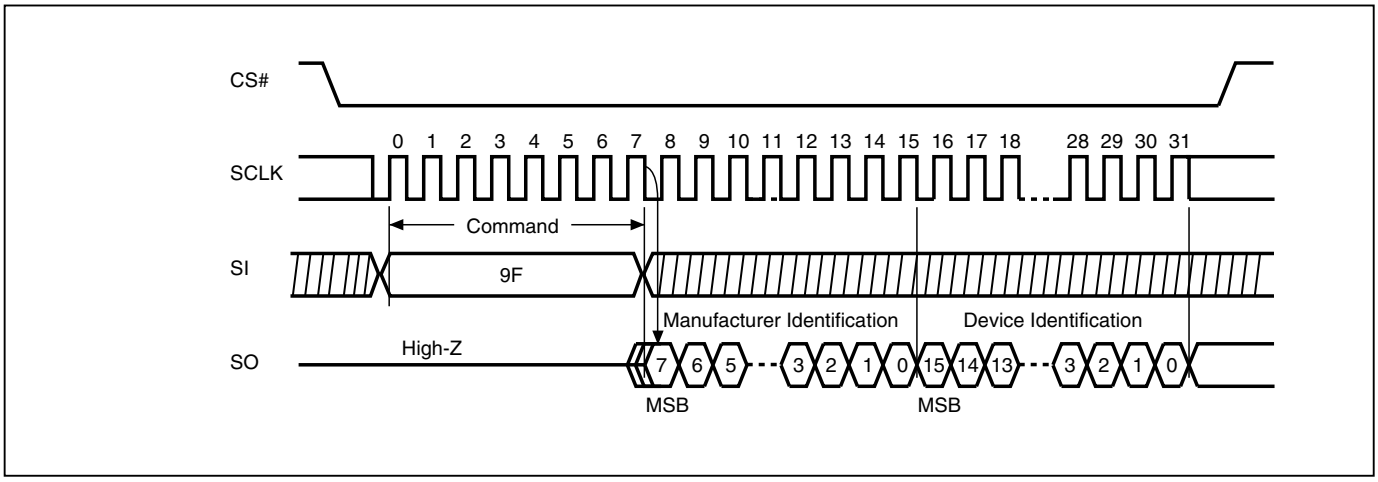

Figure 26. Read Electronic Manufacturer & Device ID (REMS) Sequence (Command 90)

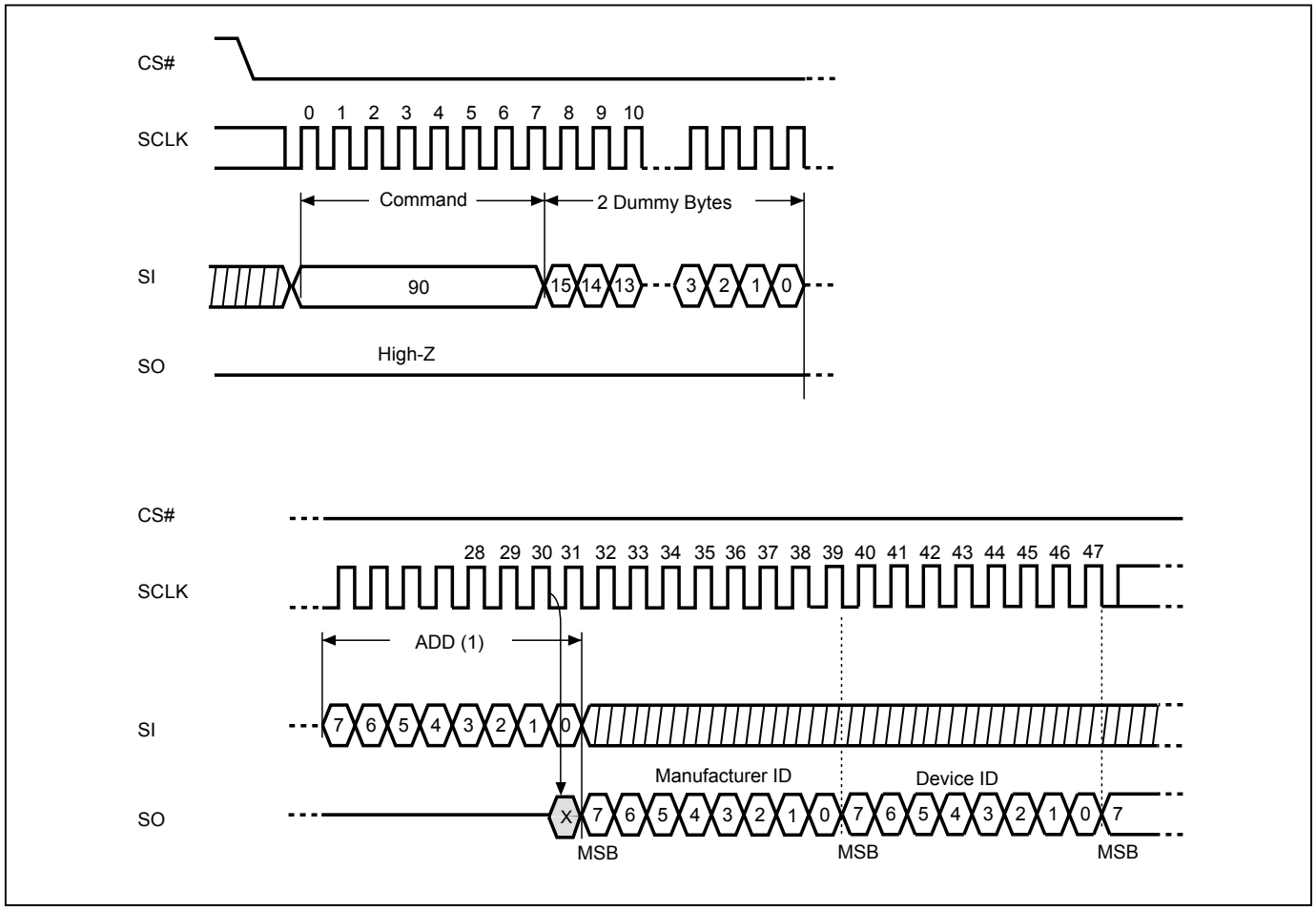

Notes:

(1) ADD=00H will output the manufacturer's ID first and ADD=01H will output device ID first.

Figure 27. Power-up Timing

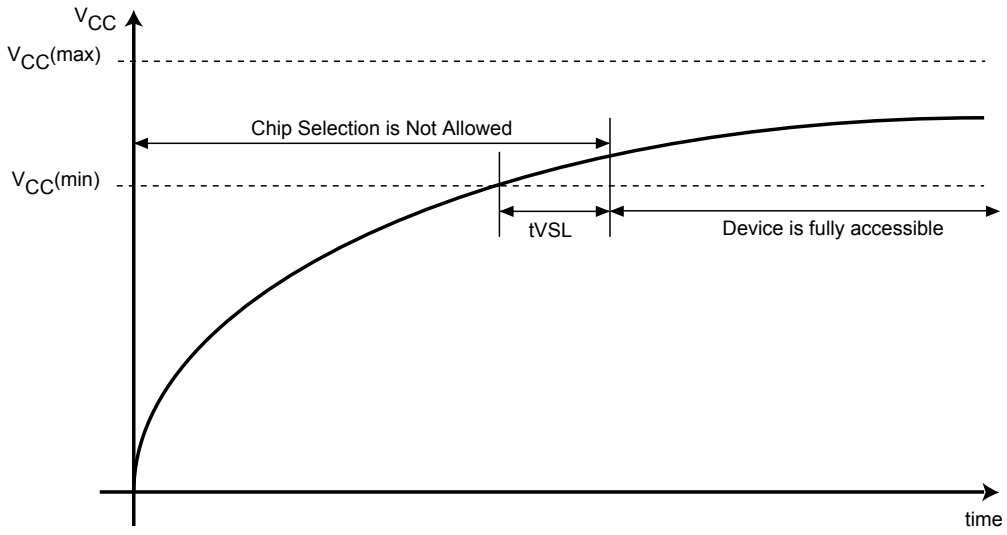

OPERATING CONDITIONS

At Device Power-Up and Power-Down

AC timing illustrated in Figure 28 and Figure 29 are the supply voltages and the control signals at device power-up and power-down. If the timing in the figures is ignored, the device will not operate correctly.

During power-up and power down, CS# needs to follow the voltage applied on VCC to keep the device not be selected. The CS# can be driven low when VCC reach Vcc(min.) and wait a period of tVSL.

Figure 28. AC Timing at Device Power-Up

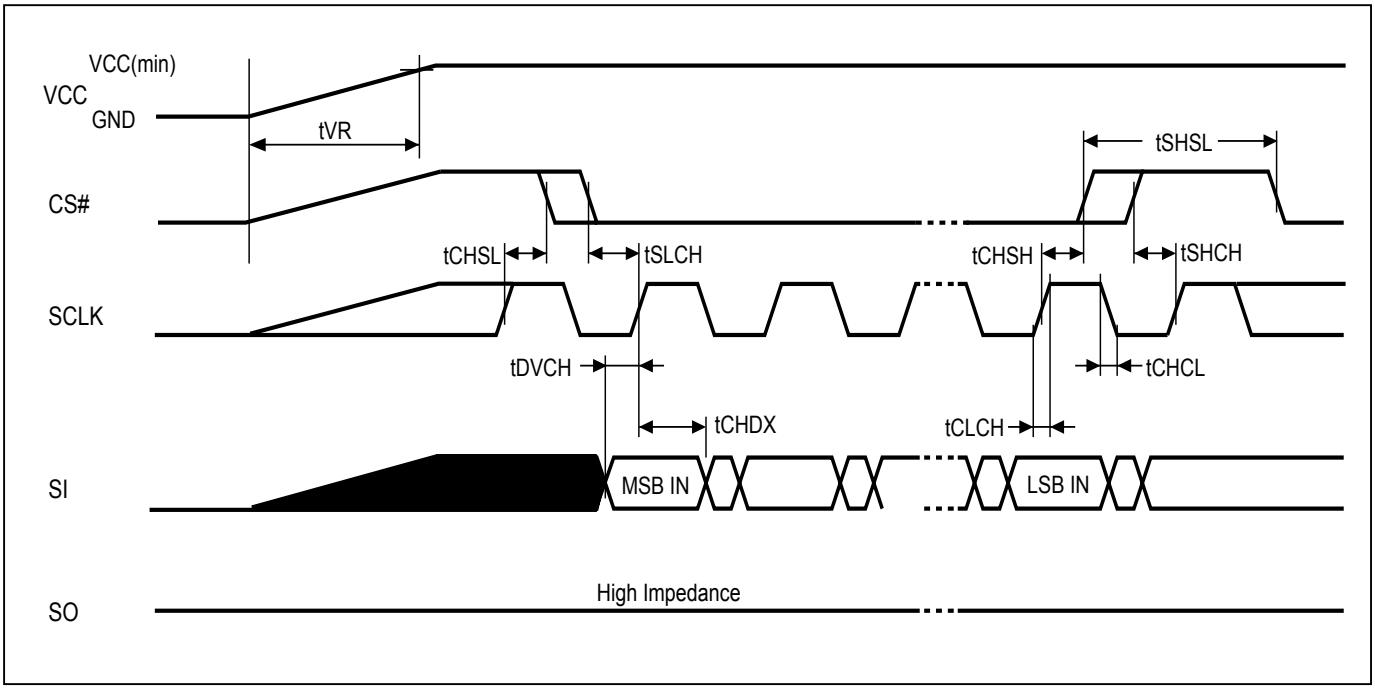

Symbol	Parameter	Notes	Min.	Max.	Unit
tVR	VCC Rise Time	1		500000	us/V

Notes :

1. Sampled, not 100% tested.

2. For AC spec tCHSL, tSLCH, tDVCH, tCHDX, tSHSL, tCHSH, tSHCH, tCHCL, tCLCH in the figure, please refer to "Table 7. AC CHARACTERISTICS".

Figure 29. Power-Down Sequence

During power down, CS# needs to follow the voltage drop on VCC to avoid mis-operation.

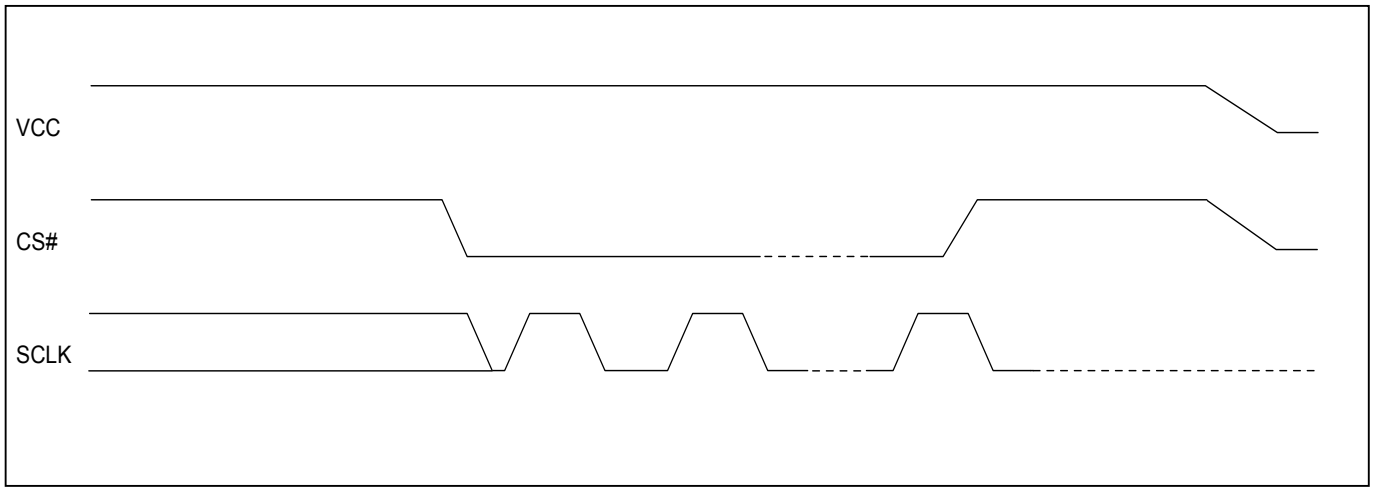

ERASE AND PROGRAMMING PERFORMANCE

Parameter	Min.	Typ. (1)	Max. (2)	Unit
Write Status Register Cycle Time		5	40	ms
Sector erase Time		40	200	ms
Block erase Time		0.4	2	s
Chip Erase Time		1.7	4	s
Byte Program Time (via page program command)		9	50	us
Page Program Time		0.6	3	ms
Erase/Program Cycle	100,000			cycles

Note:

1. *Typical program and erase time assumes the following conditions: 25°C, 3.3V, and checker board pattern.*
2. *Under worst conditions of 85°C and 2.7V.*
3. *System-level overhead is the time required to execute the first-bus-cycle sequence for the programming command.*

DATA RETENTION

Parameter	Condition	Min.	Max.	Unit
Data retention	55˚C	20		years

LATCH-UP CHARACTERISTICS

	Min.	Max.
Input Voltage with respect to GND on all power pins, SI, CS#	-1.0V	2 VCCmax
Input Voltage with respect to GND on SO	-1.0V	VCC + 1.0V
Current	-100mA	+100mA
Includes all pins except VCC. Test conditions: VCC = 3.0V, one pin at a time.		

ORDERING INFORMATION

Please contact Macronix regional sales for the latest product selection and available form factors.

Part No.	Clock (MHz)	Temperature	Package	Remark
MX25L4006EM1I-12G	86	-40~85°C	8-SOP (150mil)	
MX25L4006EM2I-12G	86	-40~85°C	8-SOP (200mil)	
MX25L4006EPI-12G	86	-40~85°C	8-PDIP (300mil)	
MX25L4006EZNI-12G	86	-40~85°C	8-land WSON (6x5mm)	
MX25L4006EZUI-12G	86	-40~85°C	8-USON (2x3x0.6mm)	

PART NAME DESCRIPTION

MX 25 L 4006E M1 I - 12 G

OPTION:
G: RoHS Compliant and Halogen-free

SPEED:
12: 86MHz

TEMPERATURE RANGE:
I: Industrial (-40°C to 85°C)

PACKAGE:
ZN: WSON (0.8mm package height)
M1: 150mil 8-SOP
M2: 200mil 8-SOP
P: 300mil 8-PDIP
ZU: 8-USON (2x3x0.6mm)

DENSITY & MODE:
4006E: 4Mb

TYPE:
L: 3V

DEVICE:
25: Serial NOR Flash

PACKAGE INFORMATION

8-pin SOP (150mil)

Doe. Title: Package Outline for SOP 8L (150MIL)

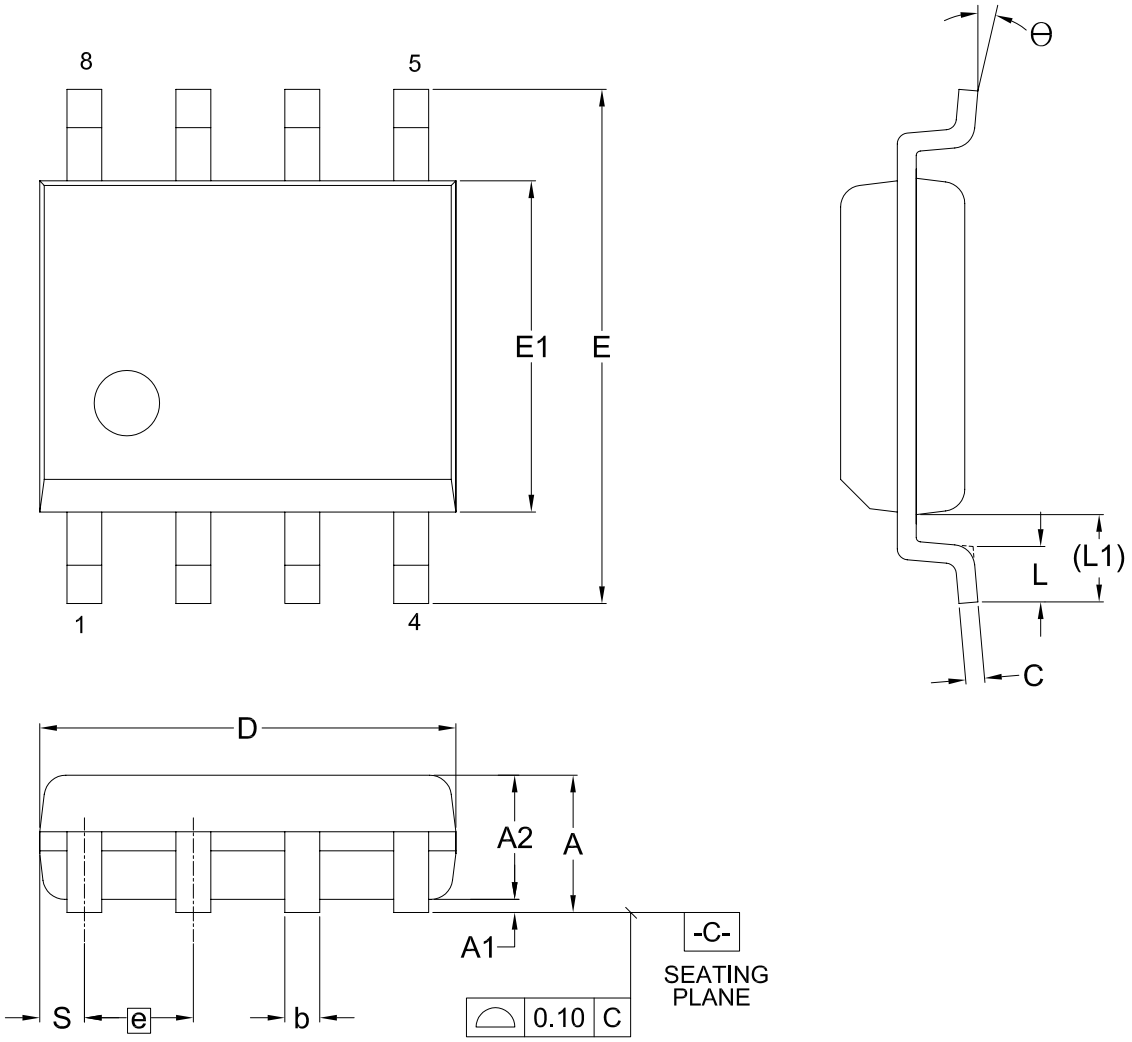

Dimensions (inch dimensions are derived from the original mm dimensions)

UNIT \ SYMBOL		A	A1	A2	b	C	D	E	E1	e	L	L1	S	θ
mm	Min.	---	0.10	1.35	0.36	0.15	4.77	5.80	3.80	---	0.46	0.85	0.41	0°
	Nom.	---	0.15	1.45	0.41	0.20	4.90	5.99	3.90	1.27	0.66	1.05	0.54	5°
	Max.	1.75	0.20	1.55	0.51	0.25	5.03	6.20	4.00	---	0.86	1.25	0.67	8°
Inch	Min.	---	0.004	0.053	0.014	0.006	0.188	0.228	0.150	---	0.018	0.033	0.016	0°
	Nom.	---	0.006	0.057	0.016	0.008	0.193	0.236	0.154	0.050	0.026	0.041	0.021	5°
	Max.	0.069	0.008	0.061	0.020	0.010	0.198	0.244	0.158	---	0.034	0.049	0.026	8°

8-pin SOP (200mil)

Doc. Title: Package Outline for SOP 8L 200MIL (official name - 209MIL)

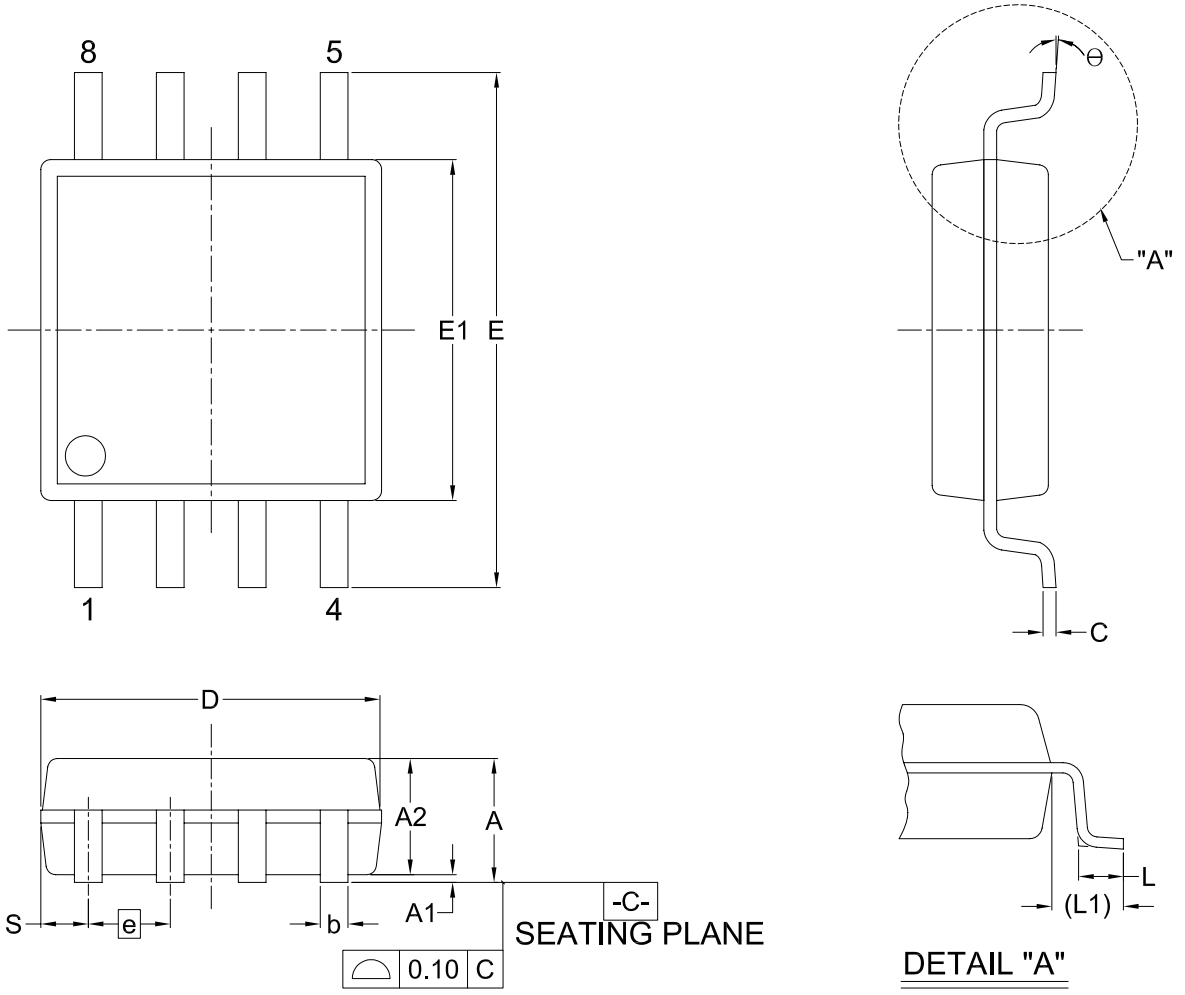

Dimensions (inch dimensions are derived from the original mm dimensions)

UNIT \ SYMBOL		A	A1	A2	b	C	D	E	E1	e	L	L1	S	θ
mm	Min.	1.75	0.05	1.70	0.36	0.19	5.13	7.70	5.18	—	0.50	1.21	0.62	0°
	Nom.	1.95	0.15	1.80	0.41	0.20	5.23	7.90	5.28	1.27	0.65	1.31	0.74	5°
	Max.	2.16	0.20	1.91	0.51	0.25	5.33	8.10	5.38	—	0.80	1.41	0.88	8°
Inch	MIn.	0.069	0.002	0.067	0.014	0.007	0.202	0.303	0.204	—	0.020	0.048	0.024	0°
	Nom.	0.077	0.006	0.071	0.016	0.008	0.206	0.311	0.208	0.050	0.026	0.052	0.029	5°
	Max.	0.085	0.008	0.075	0.020	0.010	0.210	0.319	0.212	—	0.031	0.056	0.035	8°

8-pin PDIP (300mil)

Doc. Title: Package Outline for PDIP 8L (300MIL)

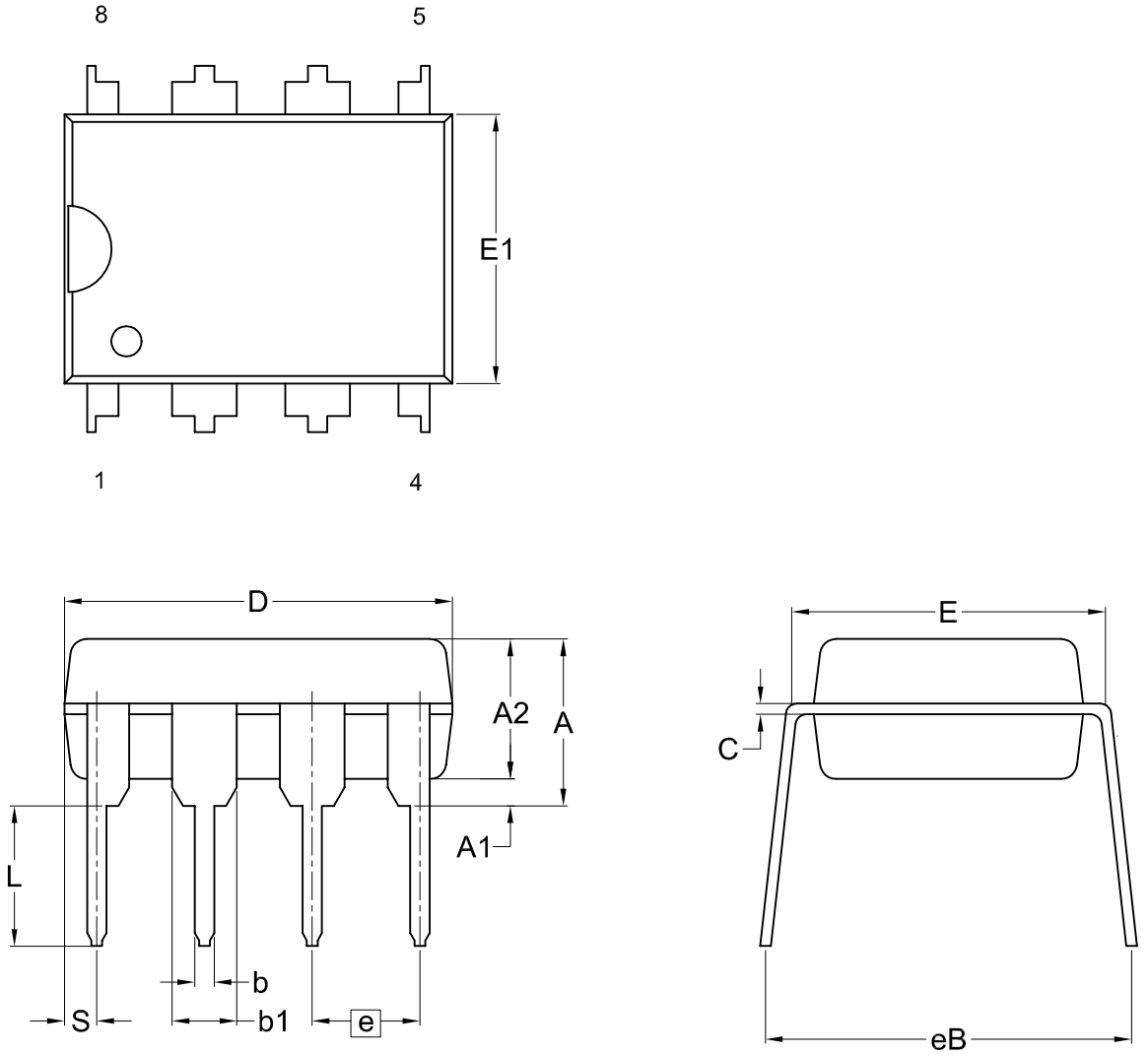

Dimensions (inch dimensions are derived from the original mm dimensions)

UNIT \ SYMBOL		A	A1	A2	b	b1	C	D	E	E1	e	eB	L	S
mm	Min.	—	0.38	3.18	0.36	1.14	0.20	9.02	7.62	6.22	—	7.87	2.92	0.76
	Nom.	—	—	3.30	0.46	1.52	0.25	9.27	7.87	6.35	2.54	8.89	3.30	1.14
	Max.	5.33	—	3.43	0.56	1.78	0.36	10.16	8.13	6.48	—	9.53	3.81	1.52
Inch	Min.	---	0.015	0.125	0.014	0.045	0.008	0.355	0.300	0.245	—	0.310	0.115	0.030
	Nom.	---	—	0.130	0.018	0.060	0.010	0.365	0.310	0.250	0.100	0.350	0.130	0.045
	Max.	0.210	—	0.135	0.022	0.070	0.014	0.400	0.320	0.255	—	0.375	0.150	0.060

8-land WSON (6x5mm, 0.8mm package height)

Doc. Title: Package Outline for WSON 8L (6x5x0.8MM, LEAD PITCH 1.27MM)

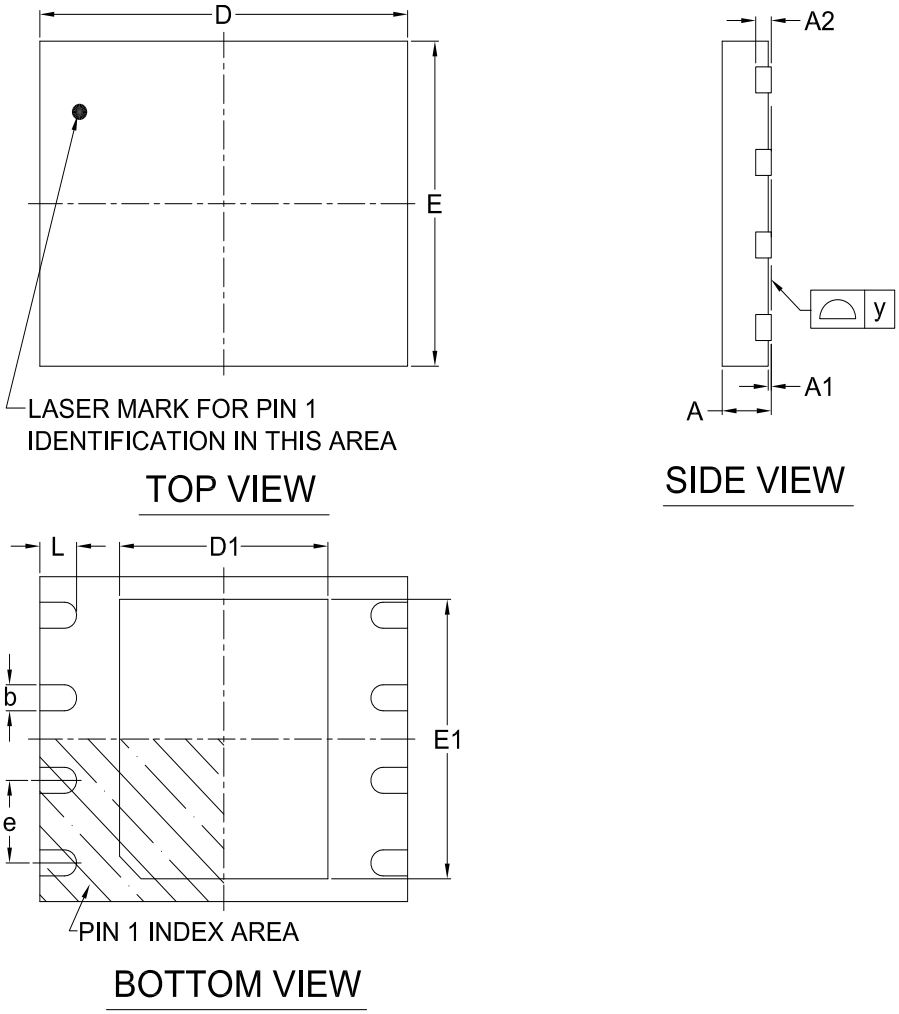

Note:

This package has an exposed metal pad underneath the package. It is recommended to leave the metal pad floating or to connect it to the same ground as the GND pin of the package. Do not connect the metal pad to any other voltage or signal line on the PCB. Avoid placing vias or traces underneath the metal pad. Connection of this metal pad to any other voltage or signal line can result in shorts and/or electrical malfunction of the device.

Dimensions (inch dimensions are derived from the original mm dimensions)

UNIT \ SYMBOL		A	A1	A2	b	D	D1	E	E1	L	e	y
mm	Min.	0.70	---	---	0.35	5.90	3.35	4.90	3.95	0.55	---	0.00
	Nom.	---	---	0.20	0.40	6.00	3.40	5.00	4.00	0.60	1.27	---
	Max.	0.80	0.05	---	0.48	6.10	3.45	5.10	4.05	0.65	---	0.05
Inch	Min.	0.028	---	---	0.014	0.232	0.132	0.193	0.156	0.022	---	0.00
	Nom.	---	---	0.008	0.016	0.236	0.134	0.197	0.157	0.024	0.05	---
	Max.	0.032	0.002	---	0.019	0.240	0.136	0.201	0.159	0.026	---	0.002

8-land USON (2x3x0.6mm)

Doc. Title: Package Outline for USON 8L (2x3x0.6MM, LEAD PITCH 0.5MM)

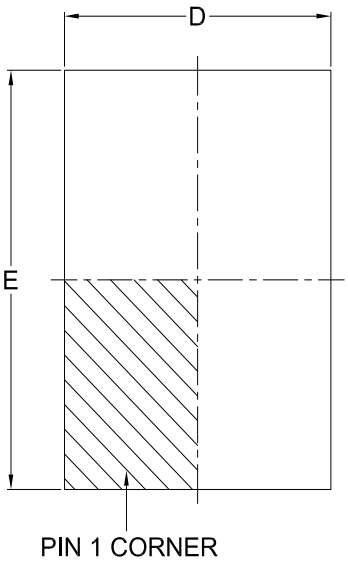

TOP VIEW

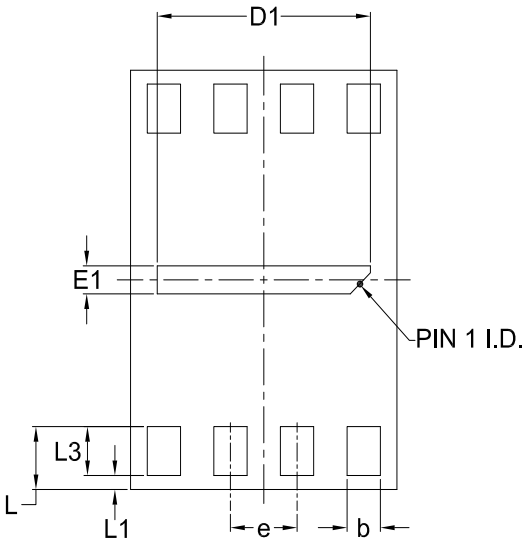

BOTTOM VIEW

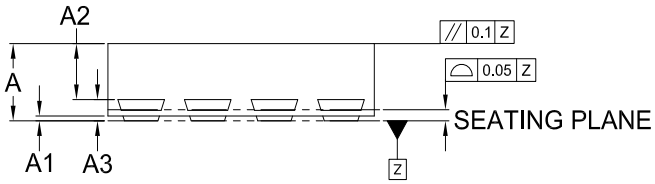

SIDE VIEW

Note:

This package has an exposed metal pad underneath the package. It is recommended to leave the metal pad floating or to connect it to the same ground as the GND pin of the package. Do not connect the metal pad to any other voltage or signal line on the PCB. Avoid placing vias or traces underneath the metal pad. Connection of this metal pad to any other voltage or signal line can result in shorts and/or electrical malfunction of the device.

Dimensions (inch dimensions are derived from the original mm dimensions)

UNIT \ SYMBOL		A	A1	A2	A3	b	D	D1	E	E1	e	L	L1	L3
mm	Min.	0.50	0	---	---	0.20	1.90	1.50	2.90	0.10	---	0.40	0	0.30
	Nom.	0.55	0.035	0.40	0.152	0.25	2.00	1.60	3.00	0.20	0.50	0.45	---	0.40
	Max.	0.60	0.05	0.425	---	0.30	2.10	1.70	3.10	0.30	---	0.50	0.15	0.50
Inch	Min.	0.020	0	---	---	0.008	0.075	0.059	0.114	0.004	---	0.016	0	0.012
	Nom.	0.022	0.0014	0.016	0.0060	0.010	0.079	0.063	0.118	0.008	0.020	0.018	---	0.016
	Max.	0.024	0.002	0.0167	---	0.012	0.083	0.067	0.122	0.012	---	0.020	0.006	0.020

REVISION HISTORY

Revision No.	Description	Page	Date
0.01	1. Modified "Initial Delivery State" description	P27	MAY/19/2010
	2. Modified OTP Capable data from 1 to 0	P21	
	3. Revised Vcc Supply Minimum Voltage Address Bits	P21	
	4. Changed wording from DMC to SFDP	P4,8,11,19	
	5. Changed title from "Advanced Information" to "Preliminary"	P4	
	6. Corrected Max. Write Status Register Cycle Time	P40	
	7. Revised SFDP sequence description	P19	
1.0	1. Removed Preliminary	P4	JUL/02/2010
	2. Removed SFDP sequence description & content table	P4,8,11,19	
	3. Removed Write Status Register Cycle Time in notes	P23,37	
1.1	1. Added CS# rising and falling time description	P8,23	OCT/26/2010
	2. Modified tW from 10(typ.)/100(max.) to 5(typ.)/40(max.)	P23,37	
	3. Added tSE(max.): 300ms	P23,37	
	4. Revised clock time to 86MHz	P38,39	
	5. Removed note 2	P13	
1.2	1. Modified tVSL from 10us(min.) to 200us(min.)	P24	MAR/21/2011
	2. Modified description for RoHS compliance	P4,38,39	
	3. Added 8-USON package	P4,5,38,39,44	
1.3	1. Added Read SFDP (RDSFDP) Mode	P4,8,11, P19~24,29	FEB/10/2012
1.4	1. Modified Secured OTP data from 1 to 0	P23	AUG/13/2013
1.5	1. Updated parameters for DC/AC Characteristics	P4,28,29	NOV/14/2013
	2. Updated Erase and Programming Performance	P4,43	
1.6	1. Modified Package Outline of SOP 8L (150MIL & 200MIL)	P47,48	OCT/24/2014
	2. Modified Hold figure and description	P10,11	
	3. Modified Note of SFDP Table	P25	
	4. Updated BLOCK DIAGRAM.	P6	
1.7	1. Updated tVR descriptions	P42	JAN/08/2018
	2. Added "Macronix Proprietary" footnote	All	
	3. Revised *"BLOCK DIAGRAM"*	P6	
	4. Format modification	P4,47-51	
	5. Modified *"Figure 9. Hold Timing"*	P33	
	6. Added a statement for product ordering information	P45	
	7. Updated "8-land WSON (6x5mm, 0.8mm package height)" in Pin 1 drawing (bottom view), Max. "y" values and Min./Max. D1, E1 and L values	P50	
	8. Updated 8-land USON (2x3x0.6mm) to add L1 (Min.) and L3 (Nom./Max.) values	P51	

Except for customized products which has been expressly identified in the applicable agreement, Macronix's products are designed, developed, and/or manufactured for ordinary business, industrial, personal, and/or household applications only, and not for use in any applications which may, directly or indirectly, cause death, personal injury, or severe property damages. In the event Macronix products are used in contradicted to their target usage above, the buyer shall take any and all actions to ensure said Macronix's product qualified for its actual use in accordance with the applicable laws and regulations; and Macronix as well as it's suppliers and/or distributors shall be released from any and all liability arisen therefrom.

Copyright© Macronix International Co., Ltd. 2010-2019. All rights reserved, including the trademarks and tradename thereof, such as Macronix, MXIC, MXIC Logo, MX Logo, Integrated Solutions Provider, Nbit, Macronix NBit, HybridNVM, HybridFlash, HybridXFlash, XtraROM, KH Logo, BE-SONOS, KSMC, Kingtech, MXSMIO, Macronix vEE, RichBook, Rich TV, OctaRAM, OctaBus, OctaFlash, FitCAM, ArmorFlash. The names and brands of third party referred thereto (if any) are for identification purposes only.

For the contact and order information, please visit Macronix's Web site at: http://www.macronix.com

MACRONIX INTERNATIONAL CO., LTD. reserves the right to change product and specifications without notice.