Crystal Bridge to the Future

Crystal Clock Oscillator

■NZ2016SHA Data Sheet
(For Automotive Safety)

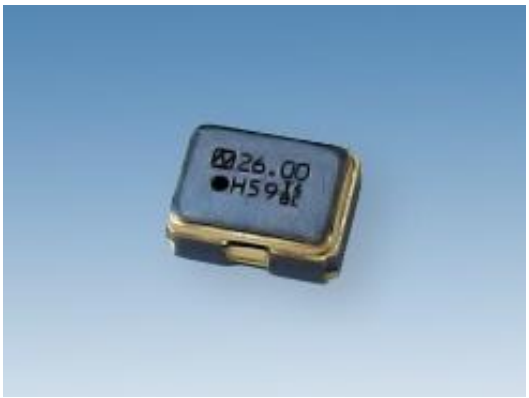

RoHS Compliant
Directive 2011/65/EU
Directive (EU) 2015/863

Pb free

AEC
Q100/Q200

Application

●For Automotive safety
(e.g., Millimeter wave radar or Image processing for self-driving)

Features

- Output Specification : CMOS
- High quality and high reliability design for Automotive safety
- Supports a wide frequency range. (6.5 ~ 160 MHz)
- Supports a wide temperature range from -40 to +125 °C.
- Compact and light. Dimensions : 2.0 x 1.6 x 0.7 mm, weight : 0.01 g.
- Low phase jitter (Typ. 100 fs (Frequency Offset : 12 kHz to 20 MHz)@80 MHz, 3.3 V)
- Taped units enable automatic mounting IR Reflow (lead free) is possible.
- Lead-free.
- Conforms to AEC-Q100/Q200.

1. Item : Crystal Clock Oscillator

2. Type : NZ2016SHA

3. Nominal Frequency : 6.5 ~ 160 MHz

4. NDK Spec. No. : See Table.1

5. Maximum Ratings

	Item	Ratings			Notes
		min	max	Units	
1	Supply Voltage	-0.3	+4.0	V	80＜F max 3.96 V
2	Input Voltage	-0.3	V_{CC}+0.3	V	
3	Output Current	-20	+20	mA	
4	Storage Temperature Range	-55	+125	°C	

6. Electrical Specifications

	Parameters	SYM	Electrical Spec.				Notes
			min	typ	max	Units	
1	Nominal Frequency	f_{nom}	6.5		160	MHz	*2
2	Supply Voltage	V_{CC}	+1.8 to +3.3			V	*3
3	Current Consumption (Operating)	I_{CC}	See Table.2			mA	at 25 °C
4	Current Consumption (Stand-by)	I_{ST}			20	μA	at 25 °C
5	Output Level	-	CMOS				
6	Load Capacitance	C_L			15	pF	
7	Operating Temperature Range	T_{opr}	[-40 to +85] to [-40 to +125]			°C	See Table.1
8	Overall Frequency Tolerance	$\Delta f/f_{nom}$	± 50 to ± 100			ppm	See Table.1, *1
9	Output Voltage	V_{OL}			0.1 V_{CC}	V	6.5≦F≦80
		V_{OH}	0.9 V_{CC}			V	
		V_{OL}			0.2 V_{CC}	V	80＜F≦160
		V_{OH}	0.8 V_{CC}			V	
10	Rise Time(t_r), Fall Time(t_f)	t_r/t_f			5	ns	+2.5 V to +3.3 V 0.1 V_{CC} to 0.9 V_{CC}
					6	ns	+1.8 V 0.1 V_{CC} to 0.9 V_{CC}
					3	ns	80＜F≦160 0.2 V_{CC} ~ 0.8 V_{CC}
11	Symmetry	SYM	45		55	%	at 1/2 V_{CC}
12	Start-up Time	t_{su}			4	ms	
13	Output Wave Form	-	Square wave				
14	Stand-by Function	#1 PAD input			# 3 PAD output		
		H level (0.7 V_{CC} to V_{CC}) or open			Operating		
		L level (0.3 V_{CC} max)			High impedance		

*1 Inclusive of Freq. tolerance (at 25 °C), frequency/temperature characteristics, frequency/voltage coefficient.

*2 Frequencies below 6.5MHz are also available, so please contact us if you are interested.

*3 Supply Voltage: +2.5 to +3.3 V (131 to 160 MHz)

Table.1 NDK Spec. No. List

6.5MHz ≦ F ≦ 60MHz

Overall Frequency Tolerance	Operating Temperature Range [°C]	Supply Voltage [V]			
		+1.8±0.18	+2.5±0.25	+3.0±0.3	+3.3±0.33
±100 × 10^{-6}	-40 to +125	NSC5182A	NSC5182B	NSC5182C	NSC5182D
±50 × 10^{-6}	-40 to +105	NSC5295A	NSC5295B	NSC5295C	NSC5295D
±50 × 10^{-6}	-40 to +85	NSC5296A	NSC5296B	NSC5296C	NSC5296D

60MHz ＜ F ≦ 80MHz

Overall Frequency Tolerance	Operating Temperature Range [°C]	Supply Voltage [V]			
		+1.8±0.18	+2.5±0.25	+3.0±0.3	+3.3±0.33
±100 × 10^{-6}	-40 ~ +125	NSC5465A	NSC5465B	NSC5465C	NSC5465D
±50 × 10^{-6}	-40 ~ +105	NSC5466A	NSC5466B	NSC5466C	NSC5466D
±50 × 10^{-6}	-40 ~ +85	NSC5467A	NSC5467B	NSC5467C	NSC5467D

80MHz ＜ F ≦ 160MHz

Overall Frequency Tolerance	Operating Temperature Range [°C]	Supply Voltage [V]			
		+1.8±0.18	+2.5±0.25	+3.0±0.3	+3.3±0.33
±100 × 10^{-6}	-40 ~ +125	NSC5457A	NSC5457B	NSC5457C	NSC5457D
±50 × 10^{-6}	-40 ~ +105	NSC5458A	NSC5458B	NSC5458C	NSC5458D
±50 × 10^{-6}	-40 ~ +85	NSC5459A	NSC5459B	NSC5459C	NSC5459D

Table.2 Current Consumption (Operating)

	Current Consumption [mA]							
Nominal Frequency [MHz]	1.5≦F＜10	10≦F＜20	20≦F＜30	30≦F＜40	40≦F＜50	50≦F＜60	60≦F＜70	70≦F≦80
1.8 V	2.5 MAX	3.5 MAX	4.0 MAX	4.5 MAX	5.0 MAX	5.5 MAX	6.0 MAX	6.5 MAX
2.5 V	3.0 MAX	4.0 MAX	4.5 MAX	5.0 MAX	5.5 MAX	6.0 MAX	6.5 MAX	7.5 MAX
3.0 V	3.5 MAX	4.5 MAX	5.0 MAX	5.5 MAX	6.0 MAX	6.5 MAX	7.5 MAX	8.5 MAX
3.3 V	3.5 MAX	4.5 MAX	5.0 MAX	5.5 MAX	6.0 MAX	7.0 MAX	8.0 MAX	9.0 MAX

Current Consumption [mA]				
Nominal Frequency [MHz]	80＜F≦85	85＜F≦105	105＜F≦130	130＜F≦160
1.8 V	9.5 MAX	10.5 MAX	12.0 MAX	—
2.5 V	11.5 MAX	12.5 MAX	15.5 MAX	32.0 MAX
3.0 V	13.0 MAX	15.5 MAX	19.5 MAX	37.5 MAX
3.3 V	13.5 MAX	16.0 MAX	20.0 MAX	38.0MAX

Table.3 Supported Frequency List

Nominal Frequency [MHz]						
12 MHz	100MHz					
16.6666 MHz	125 MHz					
20 MHz	156.25 MHz					
24 MHz	160 MHz					
25 MHz						
27 MHz						
33.3333 MHz						
40 MHz						
80 MHz						

Frequencies not listed in the list are also available, so please contact us if you have any request.

Output Voltage

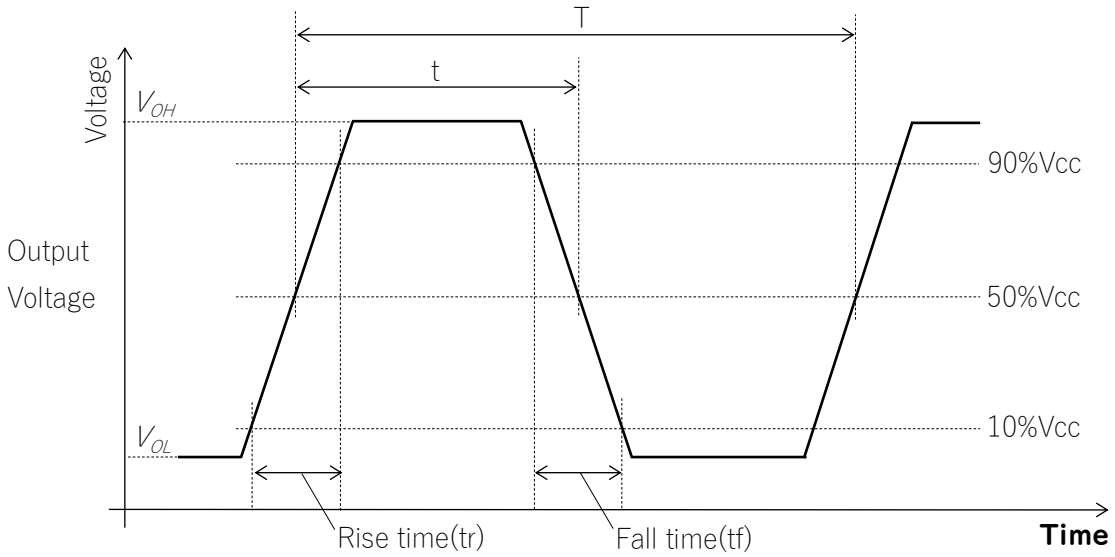

Symmetry(SYM) = t / T x 100 [%]

Start-up Time

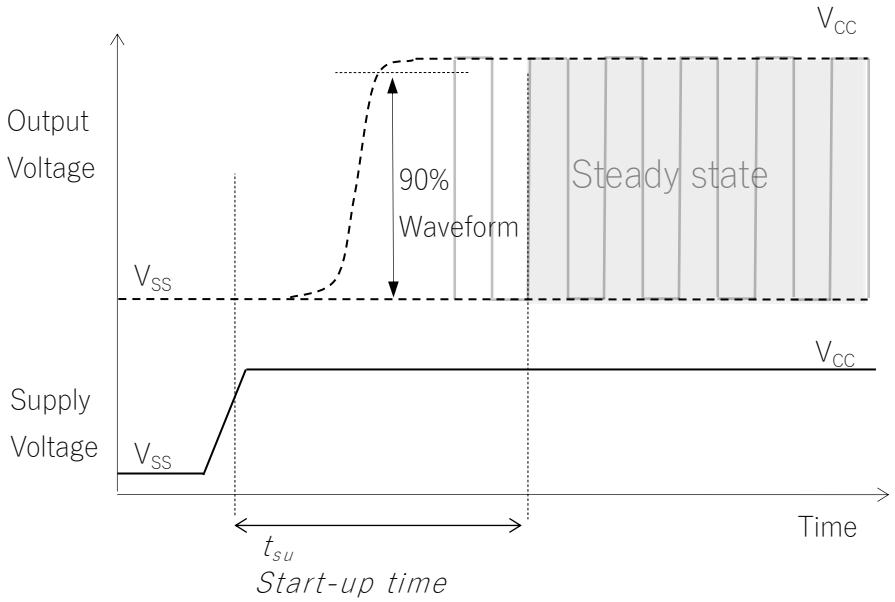

Measuring circuits

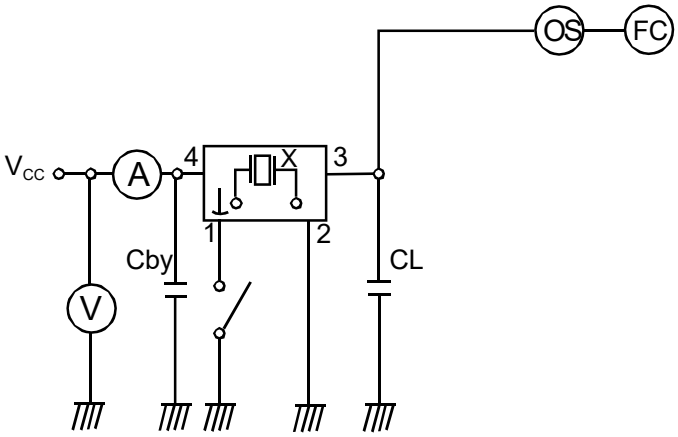

CL ; 15pF MAX including input capacity of oscilloscope
Cby ; Bypass capacitor (0.01uF)

7. Prohibited items

Example For Soldering Conditions (The below graph corresponds to Pb free solder)

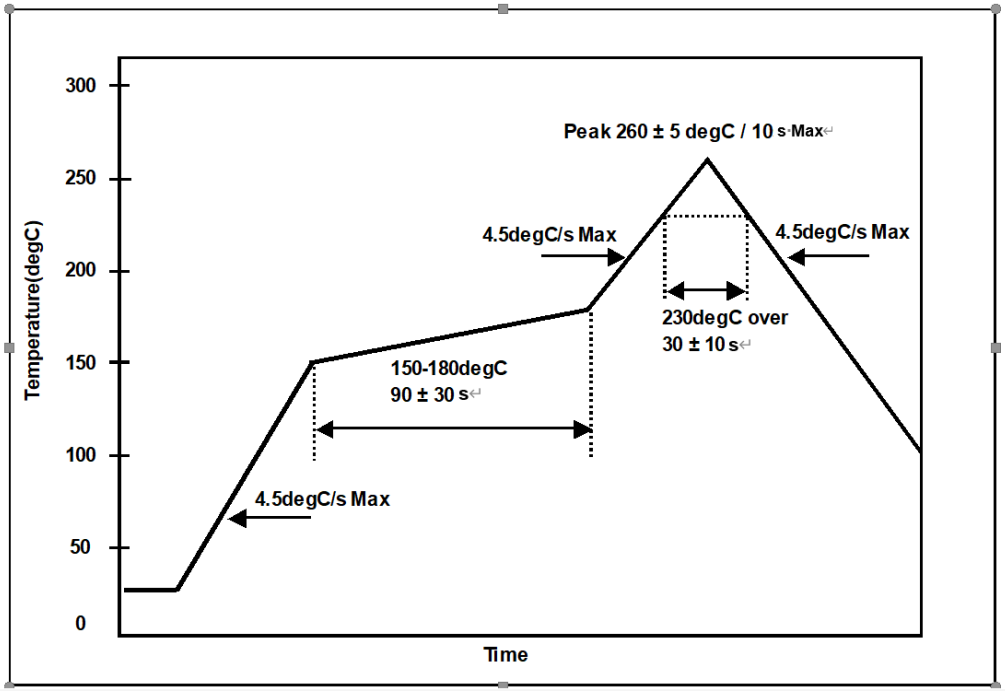

Be sure to use the product under the following conditions. Otherwise, the characteristics deterioration or destruction of the product may result.

(1) Reflow soldering heat resistance

Peak temperature: 265 °C, 10 s
Heating: 230 °C or higher, 40 s
Preheating: 150 °C to 180 °C, 120 s
Reflow passage times: 3 times

(2) Manual soldering heat resistance

Pressing a soldering iron of 350°C on the terminal electrode for 3 s.

8. Electrostatic Discharge

MM: 200 V
HBM: 2000 V
CDM: 500 V

9. MSL (Moisture Sensitivity Level)

This products MSL is 1.

■Dimension of External

Unit : mm
Tolerance : ±0.1 mm

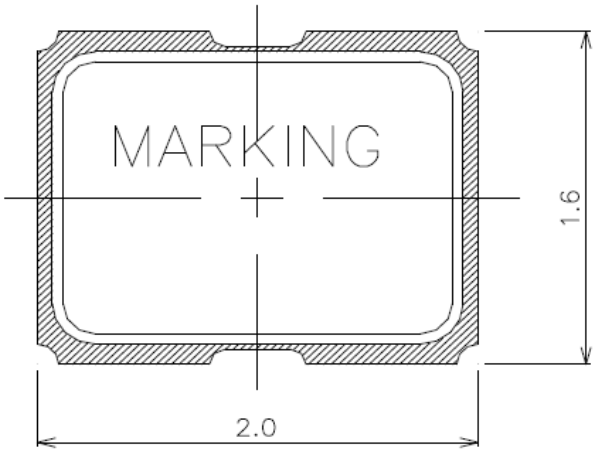

Terminal Land connections

#1	STAND-BY
#2	GND
#3	OUT
#4	Vcc

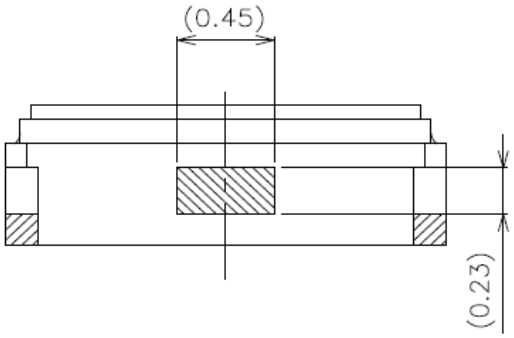

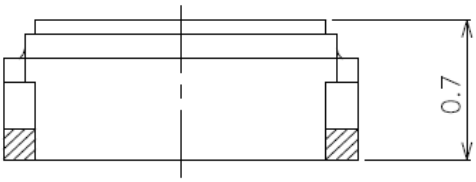

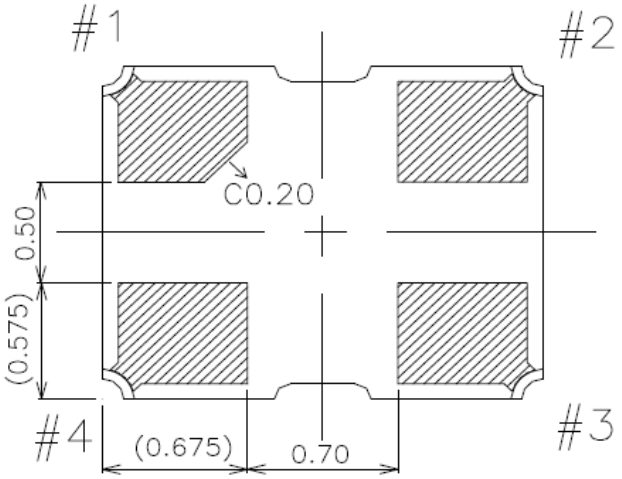

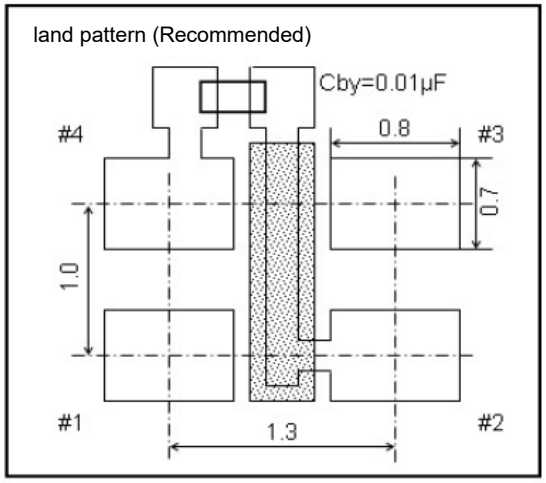

■Taping and Reel Spec.

Unit : mm

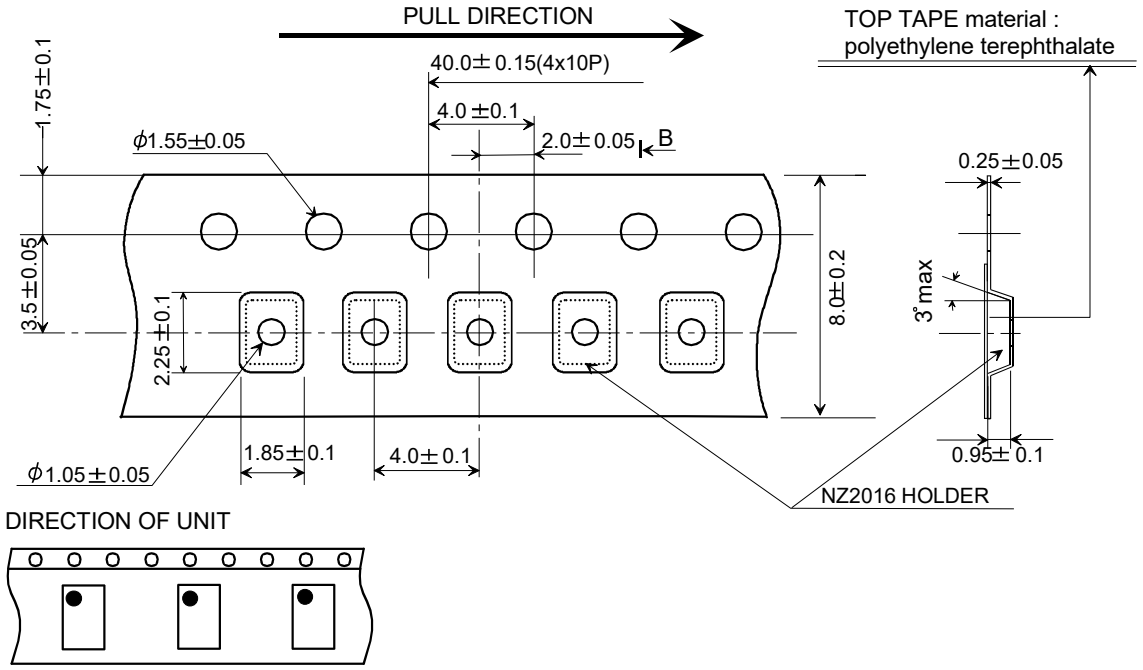

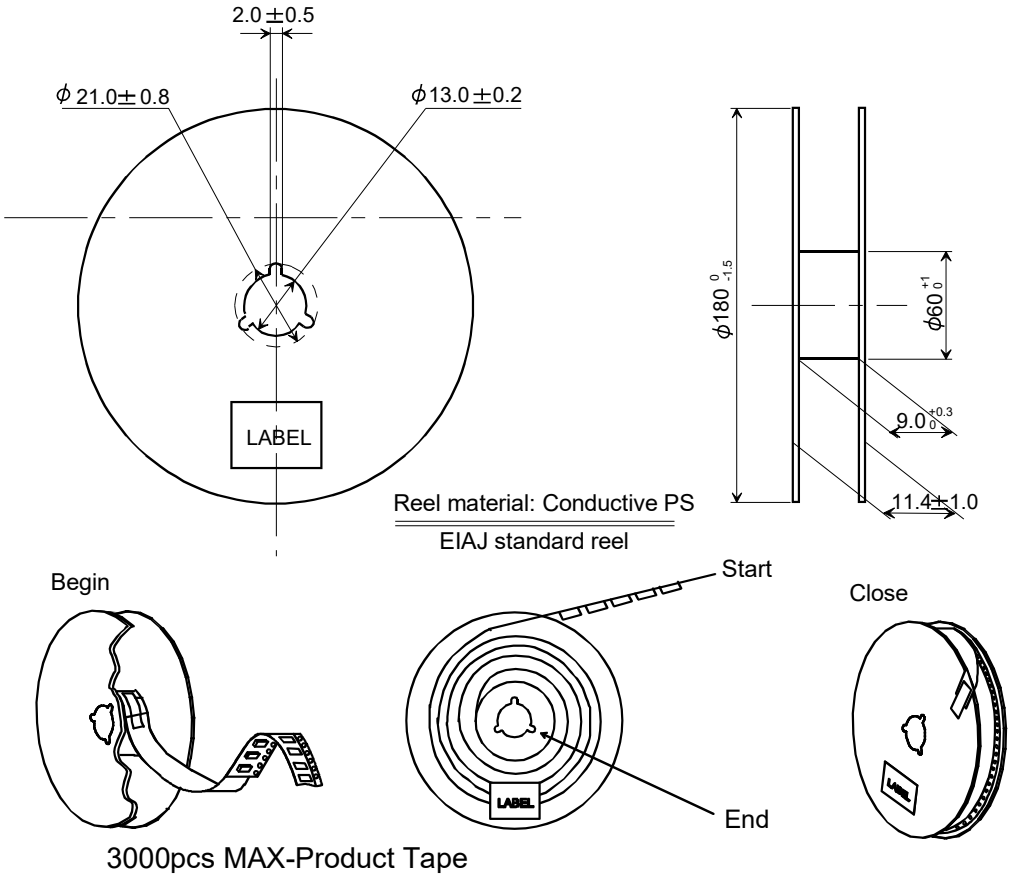

3000pcs MAX-Product Tape

■Marking

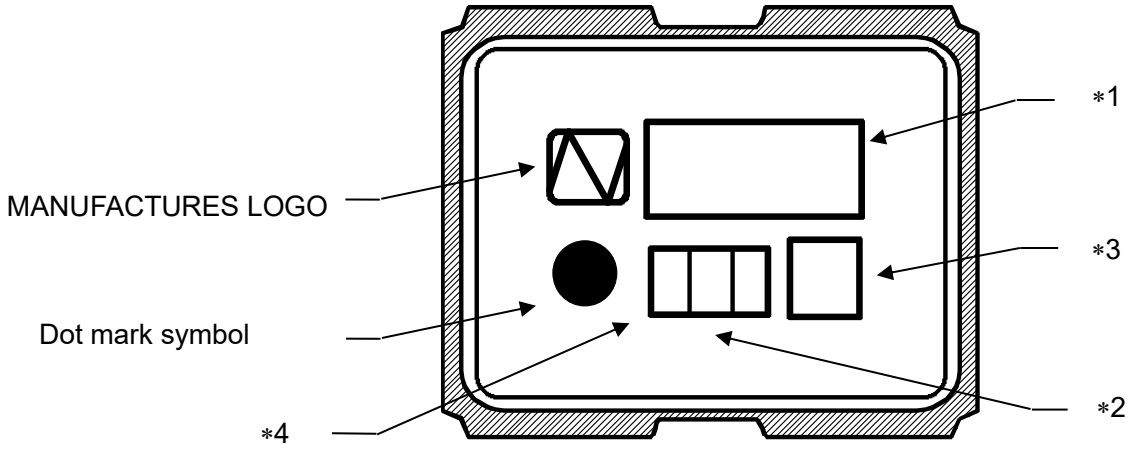

∗1 [FREQUENCY]

*2[Lot Code(Digits are Two)]

∗3 [Trace code]

∗4 [Model Symbol]
NZ2016SHA → H

■Data

- Phase noise

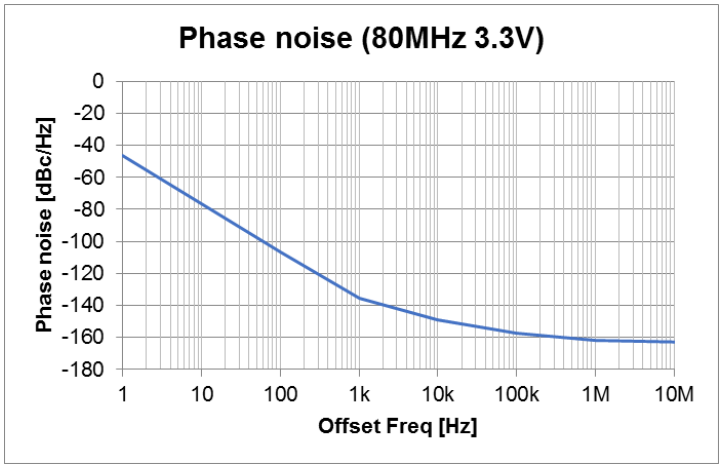

- Phase jitter : Typ. 100 fs (Offset frequency : 12 kHz to 20 MHz)@80 MHz, 3.3 V

Instruction Notice

1 Noise

When using this product, please insert a bypass capacitor between the power supply and GND. (Closer to the product terminal is desirable.)
The bypass capacitor values shown in our specifications and drawings are for reference only. (They are not guaranteed values.)
In actual use, please select the appropriate bypass capacitor value for your circuit.
NDK shall not be liable for any and all events resulting from or in connection with the use of this product in a manner that does not comply with the above instruction.

2 Resistance to dropping

The NZ2016S series is designed to be impactproof so that no damage occurs when dropped a height (75 cm) three times. However, if dropped from a desk etc., it is advisable to check their performance or contact us to check it.

3 Electrostatic protection

The NZ2016S series employ C-MOS ICs for the active element. Please use them in static-free environments.

4 Cleaning

Basically, the NZ2016S series are applicable for ultrasonic wave cleaning. However, in some case, during ultrasonic wave cleanings, internal design may get damage. Please check condition carefully beforehand.

5 Other

The NZ2016S series are C-MOS applied products. And careful handling (same as with C-MOS IC) are needed to avoid electrostatic problems.
Incorrect PAD connection is cause of trouble. Please make sure to connect correctly as below.

#2 terminal → GND
#4 terminal → V_{CC}

Notes On Use

1 Even if the appearance color etc. of the product differs by purchasing the component parts by more than two companies, there is no influence on the characteristics and reliability.

2 IN THE CASE OF THE FOLLOWING ITEMS, WE ARE NOT RESPONSIBLE FOR WARRANTY / COMPENSATION.

(1) WHEN PRODUCTS OF THIS SPECIFICATION ARE USED FOR EQUIPMENT RELATED TO HUMAN LIFE OR PROPERTY, IT IS THE RESPONSIBILITY OF THE CUSTOMER TO CONFIRM THE INFLUENCE ON THIS PRODUCT AND EQUIPMENT TO BE USED BEFOREHAND, CONDUCT NECESSARY SAFETY DESIGN (INCLUDING REDUNDANT DESIGN, MALFUNCTION PREVENTION DESIGN, etc.), PLEASE USE IT AFTER SECURING SUFFICIENT SAFETY OF EQUIPMENT.

1.SAFETY-RELATED EQUIPMENT SUCH AS AUTOMOBILES, TRAINS, SHIPS, etc., OR EQUIPMENT DIRECTLY INVOLVED IN OPERATION
2.AIRCRAFT EQUIPMENT
3.SPACE EQUIPMENT
4.MEDICAL EQUIPMENT
5.MILITARY EQUIPMENT
6.DISASTER PREVENTION / CRIME PREVENTION EQUIPMENT
7.TRAFFIC LIGHT
8.OTHER EQUIPMENT REQUIRING THE SAME PERFORMANCE AS THE ABOVE-MENTIONED EQUIPMENT

(2) IN CASES WHERE IT IS NOT INDICATED IN THE REQUESTED STANDARD AND IS USED UNDER CONDITIONS OF USE (INCLUDING CIRCUIT MARGIN etc.) THAT CAN NOT BE PREDICTED AT THE PRODUCTION STAGE.

(3) WHEN USING ULTRASONIC WELDING MACHINE.(THERE IS A POSSIBILITY THAT THE CHARACTERISTIC DEGRADATION IS CAUSED BY THE RESONANCE PHENOMENON OF THE PIEZOELECTORIC MATERIAL.(EXAMPLE;CRYSTAL PIECE))
WE WILL NOT TAKE ANY RESPONSIBILITY FOR THE INFLUENCE OF THE CUSTOMERS' PROCESS.
SO, PLEASE SUFFICIENTLY EVALUATE AT A SAMPLE STEP WHEN YOU USE ULTRASONIC WELDING MACHINE.

(4) USING RESIN MOLD MAY AFFECT THE PRODUCT CHARACTERISTIC.
PLEASE MAKE SURE TO TELL OUR SALES CONTACT WHEN YOU USE RESIN MOLD. WE WILL PERFORM INDIVIDUAL CORRESPONDENCE ABOUT A DELIVERY SPECIFICATION AND A EVALUATION METHOD.
IN ADDITION, IF YOU USE RESIN MOLD WITHOUT CONTACTING US, AND CAUSES DAMAGES AGAINST A CUSTOMER OR A THIRD PARTY, WE WILL NOT BE LIABLE FOR THE DAMAGES AND OTHER RESPONSIBILITIES BECAUSE WE CONSIDER IT IS UNDER ELF-RESPONSIBILITY USING RESIN MOLD.
WE WILL NOT TAKE ANY RESPONSIBILITY FOR THE INFLUENCE OF THE CUSTOMERS' PROCESS. PLEASE EFFICIENTLY EVALUATE AT A SAMPLE STEP WHEN YOU USE RESIN MOLD.

(5) WHEN PERFORMING IMPROPER HANDLING THAT EXCEEDS THE GUARANTEED RANGE.

Notes on storage

1 When storing the product in high temperature and high humidity condition for a long time, product characteristics (solderability etc.) and packaging condition may be deteriorated. Please store product at temperature + 5 °C to + 35 °C, humidity 85 % RH or less. The product is an electronic component, so please do not storage and use, under a dewing state.

2 The product storage deadline is 12 months after delivery in unopened state. Please use within storage deadline. If you exceed storage deadline, please check the product characteristics etc, please use.

Handling of this document and other requests

Please refer to the " Site Guidance" on our website for the handling of information contained in this document. (https://www.ndk.com/jp/terms/)