PART NO.	ENG. NO.	CKT. NO.	MOUNT OPTION	MAT'L	RAMP OPTION
39-01-4032	5559-03P2	3	2	BLANK	POSITIVE
39-01-4033	5559-03P2-210	3	2	210	POSITIVE
46999-0291	5559-03P2-400	3	2	400	POSITIVE
39-01-4036	5559-03P3	3	3	BLANK	POSITIVE
39-01-4037	5559-03P3-210	3	3	210	POSITIVE
46999-0290	5559-03P3-400	3	3	400	POSITIVE
39-01-6030	5559-03P2-BL	3	2	BL	POSITIVE
39-01-6031	5559-03P3-BL	3	3	BL	POSITIVE
50-29-0088	5559-03P4	3	4	BLANK	PASSIVE
50-29-0089	5559-03P5	3	5	BLANK	PASSIVE
50-29-0091	5559-03P4-210	3	4	210	PASSIVE
50-29-0093	5559-03P4-BL	3	4	BL	PASSIVE
50-29-0094	5559-03P5-BL	3	5	BL	PASSIVE

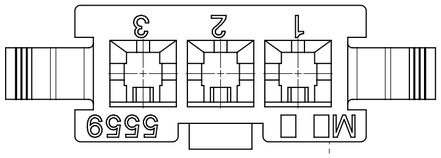

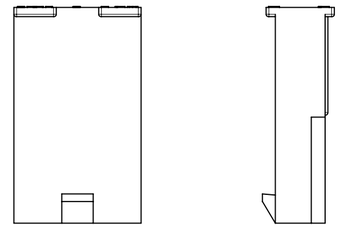

5559-03P3-***
WITHOUT MOUNTING EARS

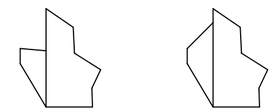

POSITIVE RAMP PASSIVE RAMP

RAMP OPTIONS

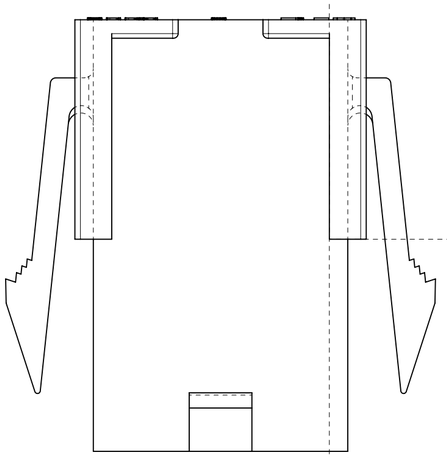

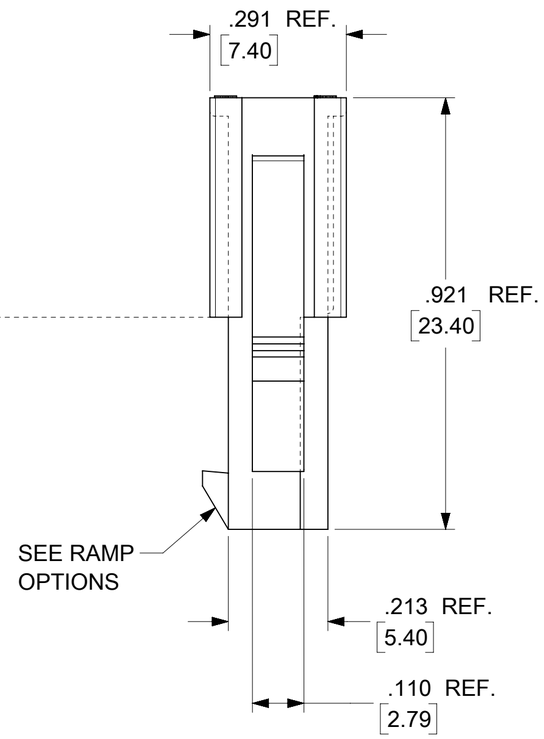

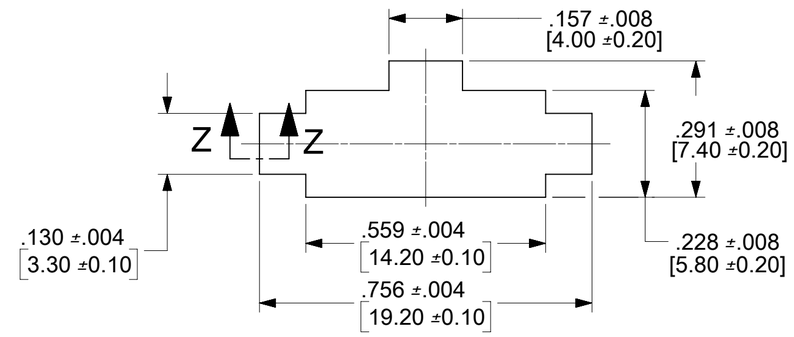

RECOMMMENDED PANEL CUT-OUT
(SEE NOTES 7 & 8)

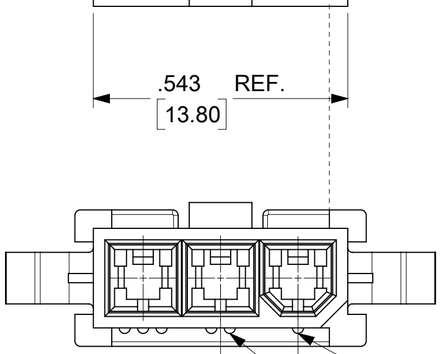

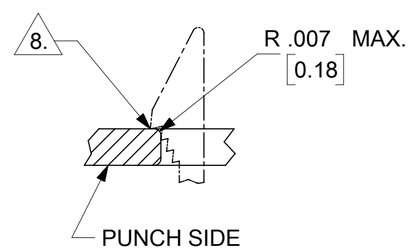

SECTION Z-Z
NO SCALE

NOTES:

1. MATERIAL;
   BLANK = NYLON 6/6, UL 94V-2, COLOR: NATURAL.
   210 = NYLON 6/6, UL 94V-0, COLOR: NATURAL.
   BL = NYLON 6/6, UL 94V-2, COLOR: BLACK.
   400 = NYLON 6/6, UL 94V-0, COLOR: BACK
2. FINISH = NOT APPLICABLE
3. PRODUCT SPECIFICATION: PS-5556-001
4. PACKAGING SPECIFICATION: PK-5559-003
5. THIS PART MATES WITH RECEPTACLE NO 5557,46994,200453.
6. THIS PART IS FOR USE WITH MOLEX MALE TERMINAL NO. 5558-*.
7. PANEL MOUNT VERSION IS FOR USE WITH .031/0.79/(0.80/2.00)THICK PANELS.
8. PANEL SHOULD BE PUNCHED IN THE DIECTION OF CONNECTOR INSERTION.
9. MOUNTING & RAMP OPTION
   2 = WITH EARS, WITH POSITIVE RAMP
   3 = WITHOUT EARS, WITH POSITIVE RAMP
   4 = WITH EARS, WITH PASSIVE RAMP
   5 = WITHOUT EARS, WITH PASSIVE RAMP
10. PART IS NOT DESIGNED FOR CURRENT SHARING.
11. CONNECTORS ARE NOT TO BE MATED OR UNMATED WHILE CIRCUITS ARE LIVE.
12. WIRES ARE TO BE DRESSED IN SUCH A MANNER TO ALLOW THE TERMINALS TO FLOAT FREELY IN THE POCKET.
13. PART CONFORMS TO CLASS "B" REQUIREMENTS OF COSMETIC SPECIFICATION PS-45499-002.

LEGEND

5559 - 03 P * - ***

- MAT'L. (SEE NOTE 1)
- MOUNTING & RAMP OPTION (SEE NOTE 9)
- PLUG
- CIRCUIT SIZE
- BASE NUMBER

THIS DRAWING REPLACES DRAWING SD-5559-03P*

THIS DRAWING CONTAINS INFORMATION THAT IS PROPRIETARY TO MOLEX ELECTRONIC TECHNOLOGIES, LLC AND SHOULD NOT BE USED WITHOUT WRITTEN PERMISSION

DIMENSION UNITS	SCALE
IN/MM	NTS

GENERAL TOLERANCES (UNLESS SPECIFIED)

	MM	INCH
4 PLACES	±	±
3 PLACES	±	± 0.01
2 PLACES	± 0.25	± 0.015
1 PLACE	± 0.38	±
0 PLACES	±	±
ANGULAR TOL	± 0.5 °	

DRAFT WHERE APPLICABLE MUST REMAIN WITHIN DIMENSIONS

CURRENT REV DESC:

EC NO: 806008
DRWN: JERRYW8 2024/11/25
CHK'D: XQZHANG 2024/12/09
APPR: XQZHANG 2024/12/09

INITIAL REVISION:
DRWN: GEP 1990/07/11
APPR: RAS 1990/07/11

THIRD ANGLE PROJECTION

molex

MINI-FIT JR. SERIES,
3 CKT. PLUG.

PRODUCT CUSTOMER DRAWING

DOCUMENT NUMBER	DOC TYPE	DOC PART	REVISION
55590300-SD	PSD	000	A2

DRAWING	SERIES	MATERIAL NUMBER	CUSTOMER	SHEET NUMBER
C-SIZE	5559	SEE TABLE	GENERAL MARKET	1 OF 1

DOCUMENT STATUS	P1	RELEASE DATE	2024/12/09 01:53:17

FORMAT: Eng-legs-master-B-prod-C
REVISION: E1
DATE: 2021/05/01