ARF469AG
ARF469BG

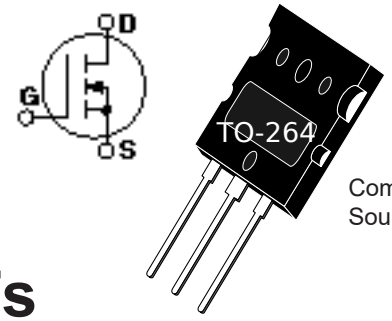

Common Source

RF POWER MOSFETs

N- CHANNEL ENHANCEMENT MODE

150V 350W 45MHz

The ARF469A and ARF469B comprise a symmetric pair of common source RF power transistors designed for push-pull scientific, commercial, medical and industrial RF power amplifier applications up to 45 MHz. They have been optimized for both linear and high efficiency classes of operation.

- **Specified 150 Volt, 40.68 MHz Characteristics:**
  - **Output Power = 350 Watts.**
  - **Gain = 16dB (Class AB)**
  - **Efficiency = 75% (Class C)**
- **Low Cost Common Source RF Package.**
- **Low Vth thermal coefficient.**
- **Low Thermal Resistance.**
- **Optimized SOA for Superior Ruggedness.**

MAXIMUM RATINGS

All Ratings: T_C = 25°C unless otherwise specified.

Symbol	Parameter	Ratings	UNIT
V_{DSS}	Drain-Source Voltage	500	Volts
V_{DGO}	Drain-Gate Voltage	500	
I_D	Continuous Drain Current @ T_C = 25°C	30	Amps
V_{GS}	Gate-Source Voltage	±30	Volts
P_D	Total Power Dissipation @ T_C = 25°C	445	Watts
$R_{\theta JC}$	Junction to Case	0.28	°C/W
T_J,T_{STG}	Operating and Storage Junction Temperature Range	-55 to 150	°C
T_L	Lead Temperature: 0.063" from Case for 10 Sec.	300	

STATIC ELECTRICAL CHARACTERISTICS

Symbol	Characteristic / Test Conditions	MIN	TYP	MAX	UNIT
BV_{DSS}	Drain-Source Breakdown Voltage (V_{GS} = 0V, I_D = 250 μA)	500			Volts
$R_{DS(ON)}$	Drain-Source On-State Resistance ① (V_{GS} = 10V, I_D = 15A)		0.25	0.28	ohms
I_{DSS}	Zero Gate Voltage Drain Current (V_{DS} = 500V, V_{GS} = 0V)			25	μA
	Zero Gate Voltage Drain Current (V_{DS} = 400V, V_{GS} = 0V, T_C = 125°C)			250	
I_{GSS}	Gate-Source Leakage Current (V_{GS} = ±30V, V_{DS} = 0V)			±100	nA
g_{fs}	Forward Transconductance (V_{DS} = 25V, I_D = 6.5A)		8		mhos
V_{GS}(TH)	Gate Threshold Voltage (V_{DS} = V_{GS}, I_D = 1mA)	2		4	Volts

CAUTION: These Devices are Sensitive to Electrostatic Discharge. Proper Handling Procedures Should Be Followed.

050-4983 Rev C 6-2023

DYNAMIC CHARACTERISTICS

Symbol	Characteristic	Test Conditions	MIN	TYP	MAX	UNIT
C_{iss}	Input Capacitance	V_{GS} = 0V V_{DS} = 150V f = 1 MHz		2300		pF
C_{oss}	Output Capacitance			250		
C_{rss}	Reverse Transfer Capacitance			125		

FUNCTIONAL CHARACTERISTICS

Symbol	Characteristic	Test Conditions	MIN	TYP	MAX	UNIT
G_{PS}	Common Source Amplifier Power Gain	f = 40.68 MHz	14	16		dB
η	Drain Efficiency	V_{GS} = 2.5V V_{DD} = 150V	70	75		%
Ψ	Electrical Ruggedness VSWR 10:1	P_{out} = 350W	No Degradation in Output Power			

① Pulse Test: Pulse width < 380µS, Duty Cycle < 2%

TYPICAL PERFORMANCE CURVES

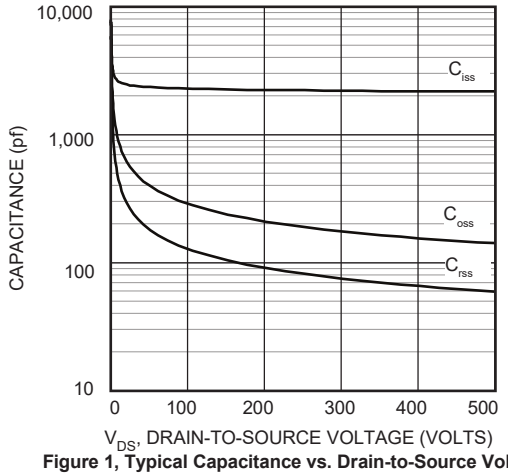

Figure 1, Typical Capacitance vs. Drain-to-Source Voltage

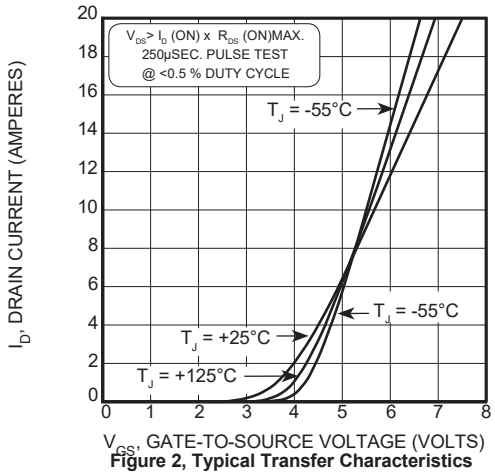

Figure 2, Typical Transfer Characteristics

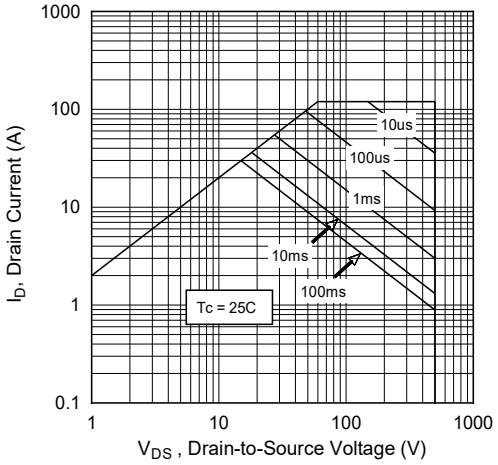

Figure 3, Typical Maximum Safe Operating Area

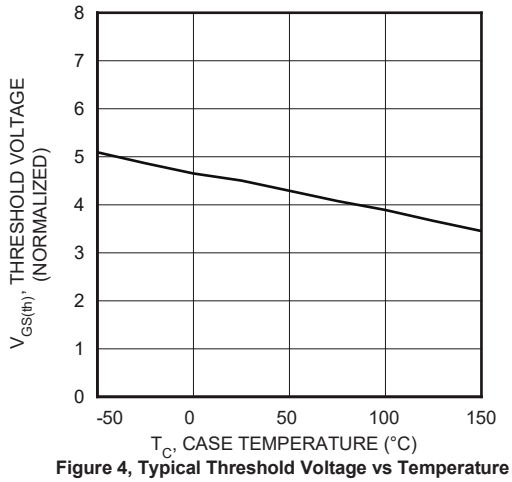

Figure 4, Typical Threshold Voltage vs Temperature

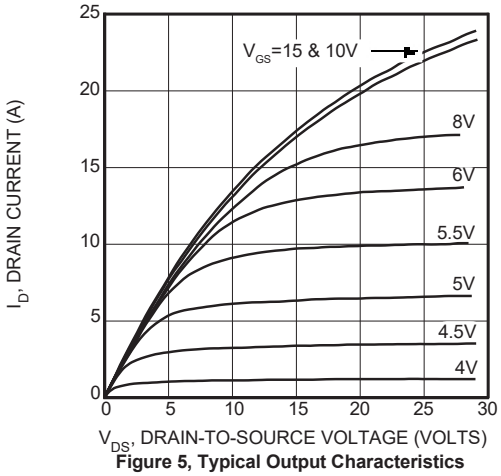

Figure 5, Typical Output Characteristics

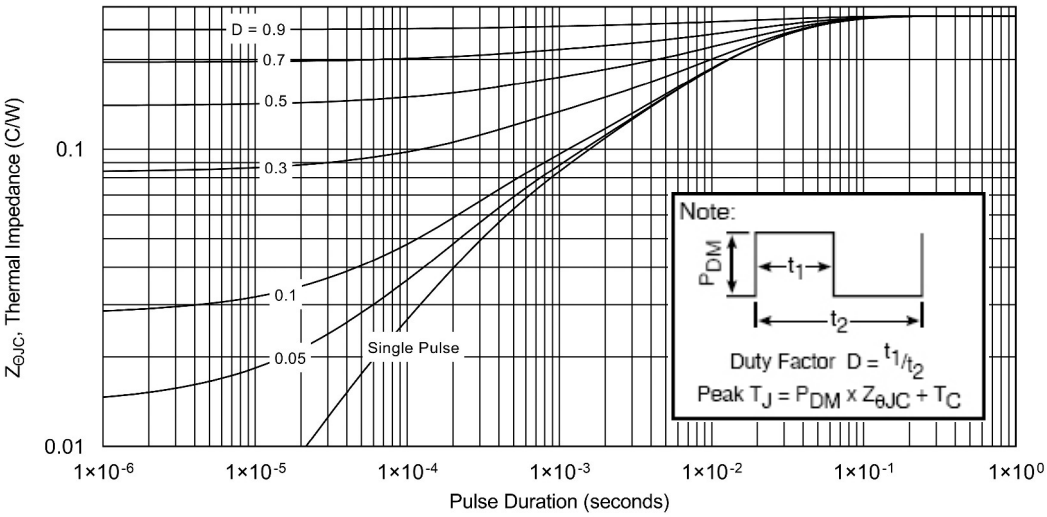

FIGURE 6, MAXIMUM EFFECTIVE TRANSIENT THERMAL IMPEDANCE, JUNCTION-TO-CASE vs PULSE DURATION

Table 1 - Typical Class AB Large Signal Input - Output Impedance

Freq. (MHz)	Z_{in} (Ω)	Z_{OL} (Ω)
2.0	18 - j 10.8	30 - j 1.5
13.5	1.3 - j 4.8	26- j 9.6
27.1	0.4- j 2.4	18 - j 13.1
40.7	0.2 - j 1.4	12 - j 12.4

Z_{IN} - Gate shunted with 25Ω I_{dq} = 100mA
Z_{OL} - Conjugate of optimum load for 300 Watts output at V_{dd}=150V

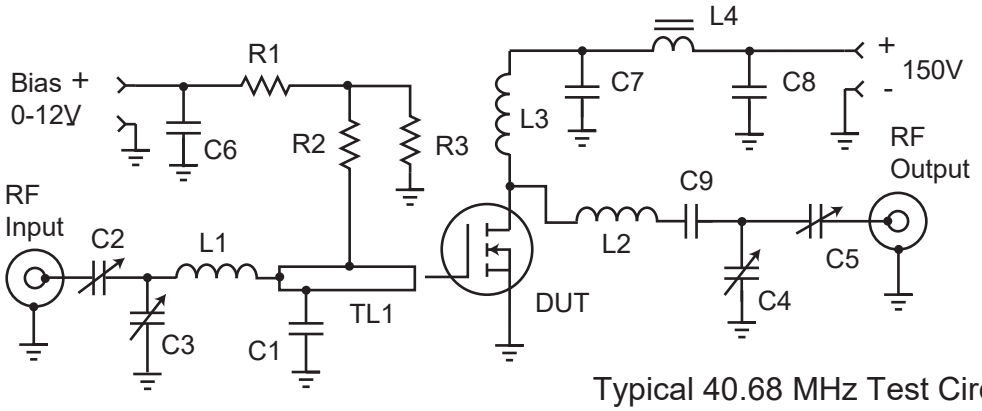

Typical 40.68 MHz Test Circuit

C1 -- 2200pF ATC 700B
C2-C5 -- Arco 465 Mica trimmer
C6-C8 -- .1 µF 500V ceramic chip
C9 -- 3x 2200 pF 500V chips COG

L1 -- 4t #22 AWG .25"ID .25 "L ~87nH
L2 -- 5t #16 AWG .312" ID .35"L ~176nH
L3 -- 10t #24 AWG .25"ID ~.5µH
L4 -- VK200-4B ferrite choke 3µH

R1- R3 -- 1kΩ 0.5Ω Carbon
TL1 -- 34Ω t-line 0.175” x 1”
C1 .45" from gate pin.
PCB -- 0.062” FR4, Er=4.7

TO-264 (L) Package Outline

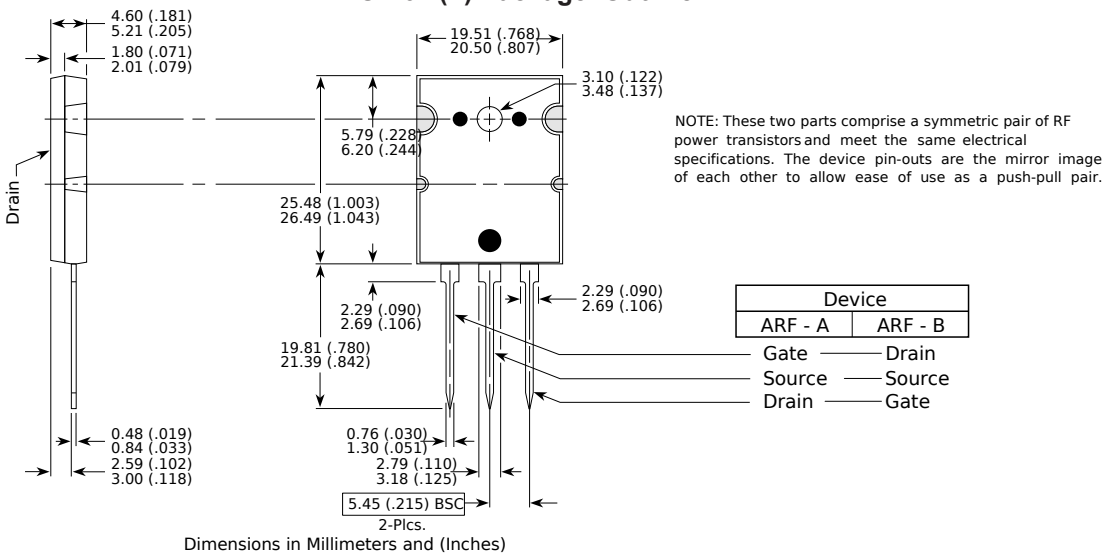

NOTE: These two parts comprise a symmetric pair of RF power transistors and meet the same electrical specifications. The device pin-outs are the mirror image of each other to allow ease of use as a push-pull pair.

Dimensions in Millimeters and (Inches)

Microchip Information

The Microchip Website

Microchip provides online support via our website at www.microchip.com/. This website is used to make files and information easily available to customers. Some of the content available includes:

- **Product Support** – Data sheets and errata, application notes and sample programs, design resources, user's guides and hardware support documents, latest software releases and archived software
- **General Technical Support** – Frequently Asked Questions (FAQs), technical support requests, online discussion groups, Microchip design partner program member listing
- **Business of Microchip** – Product selector and ordering guides, latest Microchip press releases, listing of seminars and events, listings of Microchip sales offices, distributors and factory representatives

Product Change Notification Service

Microchip's product change notification service helps keep customers current on Microchip products. Subscribers will receive email notification whenever there are changes, updates, revisions or errata related to a specified product family or development tool of interest.

To register, go to www.microchip.com/pcn and follow the registration instructions.

Customer Support

Users of Microchip products can receive assistance through several channels:

- Distributor or Representative
- Local Sales Office
- Embedded Solutions Engineer (ESE)
- Technical Support

Customers should contact their distributor, representative or ESE for support. Local sales offices are also available to help customers. A listing of sales offices and locations is included in this document.

Technical support is available through the website at: www.microchip.com/support

Microchip Devices Code Protection Feature

Note the following details of the code protection feature on Microchip products:

- Microchip products meet the specifications contained in their particular Microchip Data Sheet.
- Microchip believes that its family of products is secure when used in the intended manner, within operating specifications, and under normal conditions.
- Microchip values and aggressively protects its intellectual property rights. Attempts to breach the code protection features of Microchip product is strictly prohibited and may violate the Digital Millennium Copyright Act.
- Neither Microchip nor any other semiconductor manufacturer can guarantee the security of its code. Code protection does not mean that we are guaranteeing the product is "unbreakable". Code protection is constantly evolving. Microchip is committed to continuously improving the code protection features of our products.

Legal Notice

This publication and the information herein may be used only with Microchip products, including to design, test, and integrate Microchip products with your application. Use of this information in any other manner violates these terms. Information regarding device applications is provided only for your convenience and may be superseded by updates. It is your responsibility to ensure

© 2023 Microchip Technology Inc. and its subsidiaries

that your application meets with your specifications. Contact your local Microchip sales office for additional support or, obtain additional support at www.microchip.com/en-us/support/design-help/client-support-services.

THIS INFORMATION IS PROVIDED BY MICROCHIP "AS IS". MICROCHIP MAKES NO REPRESENTATIONS OR WARRANTIES OF ANY KIND WHETHER EXPRESS OR IMPLIED, WRITTEN OR ORAL, STATUTORY OR OTHERWISE, RELATED TO THE INFORMATION INCLUDING BUT NOT LIMITED TO ANY IMPLIED WARRANTIES OF NON-INFRINGEMENT, MERCHANTABILITY, AND FITNESS FOR A PARTICULAR PURPOSE, OR WARRANTIES RELATED TO ITS CONDITION, QUALITY, OR PERFORMANCE.

IN NO EVENT WILL MICROCHIP BE LIABLE FOR ANY INDIRECT, SPECIAL, PUNITIVE, INCIDENTAL, OR CONSEQUENTIAL LOSS, DAMAGE, COST, OR EXPENSE OF ANY KIND WHATSOEVER RELATED TO THE INFORMATION OR ITS USE, HOWEVER CAUSED, EVEN IF MICROCHIP HAS BEEN ADVISED OF THE POSSIBILITY OR THE DAMAGES ARE FORESEEABLE. TO THE FULLEST EXTENT ALLOWED BY LAW, MICROCHIP'S TOTAL LIABILITY ON ALL CLAIMS IN ANY WAY RELATED TO THE INFORMATION OR ITS USE WILL NOT EXCEED THE AMOUNT OF FEES, IF ANY, THAT YOU HAVE PAID DIRECTLY TO MICROCHIP FOR THE INFORMATION.

Use of Microchip devices in life support and/or safety applications is entirely at the buyer's risk, and the buyer agrees to defend, indemnify and hold harmless Microchip from any and all damages, claims, suits, or expenses resulting from such use. No licenses are conveyed, implicitly or otherwise, under any Microchip intellectual property rights unless otherwise stated.

Trademarks

The Microchip name and logo, the Microchip logo, Adaptec, AVR, AVR logo, AVR Freaks, BesTime, BitCloud, CryptoMemory, CryptoRF, dsPIC, flexPWR, HELDO, IGLOO, JukeBlox, KeeLoq, Kleer, LANCheck, LinkMD, maXStylus, maXTouch, MediaLB, megaAVR, Microsemi, Microsemi logo, MOST, MOST logo, MPLAB, OptoLyzer, PIC, picoPower, PICSTART, PIC32 logo, PolarFire, Prochip Designer, QTouch, SAM-BA, SenGenuity, SpyNIC, SST, SST Logo, SuperFlash, Symmetricom, SyncServer, Tachyon, TimeSource, tinyAVR, UNI/O, Vectron, and XMEGA are registered trademarks of Microchip Technology Incorporated in the U.S.A. and other countries.

AgileSwitch, APT, ClockWorks, The Embedded Control Solutions Company, EtherSynch, Flashtec, Hyper Speed Control, HyperLight Load, Libero, motorBench, mTouch, Powermite 3, Precision Edge, ProASIC, ProASIC Plus, ProASIC Plus logo, Quiet- Wire, SmartFusion, SyncWorld, Temux, TimeCesium, TimeHub, TimePictra, TimeProvider, TrueTime, and ZL are registered trademarks of Microchip Technology Incorporated in the U.S.A.

Adjacent Key Suppression, AKS, Analog-for-the-Digital Age, Any Capacitor, AnyIn, AnyOut, Augmented Switching, BlueSky, BodyCom, Clockstudio, CodeGuard, CryptoAuthentication, CryptoAutomotive, CryptoCompanion, CryptoController, dsPICDEM, dsPICDEM.net, Dynamic Average Matching, DAM, ECAN, Espresso T1S, EtherGREEN, GridTime, IdealBridge, In-Circuit Serial Programming, ICSP, INICnet, Intelligent Paralleling, IntelliMOS, Inter-Chip Connectivity, JitterBlocker, Knob-on-Display, KoD, maxCrypto, maxView, memBrain, Mindi, MiWi, MPASM, MPF, MPLAB Certified logo, MPLIB, MPLINK, MultiTRAK, NetDetach, Omniscient Code Generation, PICDEM, PICDEM.net, PICkit, PICtail, PowerSmart, PureSilicon, QMatrix, REAL ICE, Ripple Blocker, RTAX, RTG4, SAM-ICE, Serial Quad I/O, simpleMAP, SimpliPHY, SmartBuffer, SmartHLS, SMART-I.S., storClad, SQI, SuperSwitcher, SuperSwitcher II, Switchtec, SynchroPHY, Total Endurance, Trusted Time, TSHARC, USBCheck, VariSense, VectorBlox, VeriPHY, ViewSpan, WiperLock, XpressConnect, and ZENA are trademarks of Microchip Technology Incorporated in the U.S.A. and other countries.

SQTP is a service mark of Microchip Technology Incorporated in the U.S.A.

The Adaptec logo, Frequency on Demand, Silicon Storage Technology, and Symmcom are registered trademarks of Microchip Technology Inc. in other countries.

GestIC is a registered trademark of Microchip Technology Germany II GmbH & Co. KG, a subsidiary of Microchip Technology Inc., in other countries.

All other trademarks mentioned herein are property of their respective companies.

© 2023 Microchip Technology Inc. and its subsidiaries

© 2023, Microchip Technology Incorporated and its subsidiaries. All Rights Reserved.

ISBN: 978-1-6683-2363-2

Quality Management System

For information regarding Microchip's Quality Management Systems, please visit www.microchip.com/quality.

Worldwide Sales and Service

AMERICAS	ASIA/PACIFIC	ASIA/PACIFIC	EUROPE
Corporate Office	**Australia - Sydney**	**India - Bangalore**	**Austria - Wels**
2355 West Chandler Blvd.	Tel: 61-2-9868-6733	Tel: 91-80-3090-4444	Tel: 43-7242-2244-39
Chandler, AZ 85224-6199	**China - Beijing**	**India - New Delhi**	Fax: 43-7242-2244-393
Tel: 480-792-7200	Tel: 86-10-8569-7000	Tel: 91-11-4160-8631	**Denmark - Copenhagen**
Fax: 480-792-7277	**China - Chengdu**	**India - Pune**	Tel: 45-4485-5910
Technical Support:	Tel: 86-28-8665-5511	Tel: 91-20-4121-0141	Fax: 45-4485-2829
www.microchip.com/support	**China - Chongqing**	**Japan - Osaka**	**Finland - Espoo**
Web Address:	Tel: 86-23-8980-9588	Tel: 81-6-6152-7160	Tel: 358-9-4520-820
www.microchip.com	**China - Dongguan**	**Japan - Tokyo**	**France - Paris**
Atlanta	Tel: 86-769-8702-9880	Tel: 81-3-6880- 3770	Tel: 33-1-69-53-63-20
Duluth, GA	**China - Guangzhou**	**Korea - Daegu**	Fax: 33-1-69-30-90-79
Tel: 678-957-9614	Tel: 86-20-8755-8029	Tel: 82-53-744-4301	**Germany - Garching**
Fax: 678-957-1455	**China - Hangzhou**	**Korea - Seoul**	Tel: 49-8931-9700
Austin, TX	Tel: 86-571-8792-8115	Tel: 82-2-554-7200	**Germany - Haan**
Tel: 512-257-3370	**China - Hong Kong SAR**	**Malaysia - Kuala Lumpur**	Tel: 49-2129-3766400
Boston	Tel: 852-2943-5100	Tel: 60-3-7651-7906	**Germany - Heilbronn**
Westborough, MA	**China - Nanjing**	**Malaysia - Penang**	Tel: 49-7131-72400
Tel: 774-760-0087	Tel: 86-25-8473-2460	Tel: 60-4-227-8870	**Germany - Karlsruhe**
Fax: 774-760-0088	**China - Qingdao**	**Philippines - Manila**	Tel: 49-721-625370
Chicago	Tel: 86-532-8502-7355	Tel: 63-2-634-9065	**Germany - Munich**
Itasca, IL	**China - Shanghai**	**Singapore**	Tel: 49-89-627-144-0
Tel: 630-285-0071	Tel: 86-21-3326-8000	Tel: 65-6334-8870	Fax: 49-89-627-144-44
Fax: 630-285-0075	**China - Shenyang**	**Taiwan - Hsin Chu**	**Germany - Rosenheim**
Dallas	Tel: 86-24-2334-2829	Tel: 886-3-577-8366	Tel: 49-8031-354-560
Addison, TX	**China - Shenzhen**	**Taiwan - Kaohsiung**	**Israel - Ra'anana**
Tel: 972-818-7423	Tel: 86-755-8864-2200	Tel: 886-7-213-7830	Tel: 972-9-744-7705
Fax: 972-818-2924	**China - Suzhou**	**Taiwan - Taipei**	**Italy - Milan**
Detroit	Tel: 86-186-6233-1526	Tel: 886-2-2508-8600	Tel: 39-0331-742611
Novi, MI	**China - Wuhan**	**Thailand - Bangkok**	Fax: 39-0331-466781
Tel: 248-848-4000	Tel: 86-27-5980-5300	Tel: 66-2-694-1351	**Italy - Padova**
Houston, TX	**China - Xian**	**Vietnam - Ho Chi Minh**	Tel: 39-049-7625286
Tel: 281-894-5983	Tel: 86-29-8833-7252	Tel: 84-28-5448-2100	**Netherlands - Drunen**
Indianapolis	**China - Xiamen**		Tel: 31-416-690399
Noblesville, IN	Tel: 86-592-2388138		Fax: 31-416-690340
Tel: 317-773-8323	**China - Zhuhai**		**Norway - Trondheim**
Fax: 317-773-5453	Tel: 86-756-3210040		Tel: 47-72884388
Tel: 317-536-2380			**Poland - Warsaw**
Los Angeles			Tel: 48-22-3325737
Mission Viejo, CA			**Romania - Bucharest**
Tel: 949-462-9523			Tel: 40-21-407-87-50
Fax: 949-462-9608			**Spain - Madrid**
Tel: 951-273-7800			Tel: 34-91-708-08-90
Raleigh, NC			Fax: 34-91-708-08-91
Tel: 919-844-7510			**Sweden - Gothenberg**
New York, NY			Tel: 46-31-704-60-40
Tel: 631-435-6000			**Sweden - Stockholm**
San Jose, CA			Tel: 46-8-5090-4654
Tel: 408-735-9110			**UK - Wokingham**
Tel: 408-436-4270			Tel: 44-118-921-5800
Canada - Toronto			Fax: 44-118-921-5820
Tel: 905-695-1980			
Fax: 905-695-2078			

© 2023 Microchip Technology Inc. and its subsidiaries