DIO3340
USB 3.1/3.0 Super-Speed 11 Gbps Switch

Features

- Wide V_{DD} input voltage range: 1.5 V to 5.0 V
- Up to 11 Gbps for applications under USB3.0, USB3.1, 10GE, Thunderbolt, and SAS3.0 protocols
- Bidirectional operation
- Bandwidth: 11 GHz (typ.)
- -0.9 dB typical insertion loss at 2.5 GHz
- Low active power of 15 µA (typ.) at 3.6 V V_{DD}
- Low shutdown power of < 0.5 µA (max.)
- Low crosstalk: -55 dB at 2.5 GHz
- Low off isolation: -27 dB at 2.5 GHz
- Operation temperature range: -40°C to 85 °C
- ±3 kV HBM ESD protection
- Packaged in QFN2*3-18 and QFN2*2-18

Applications

- Smartphones
- Tablets
- Notebooks

Descriptions

The DIO3340 is a two-pair, 2:1 data switch for USB Super Speed Gen1 and Gen2, 5 Gbps, and 10 Gbps data. The DIO3340 focuses on the mobile device market, for use in Type-C applications as a reversible cable switch. It can minimize the switch channel-to-channel skew and channel-to-channel crosstalk of the super speed signals.

The DIO3340 data switches offer superior performance and support various high-speed data transmission protocols, such as USB3.0, USB3.1, 10GE, Thunderbolt, and SAS3.0.

Block Diagram

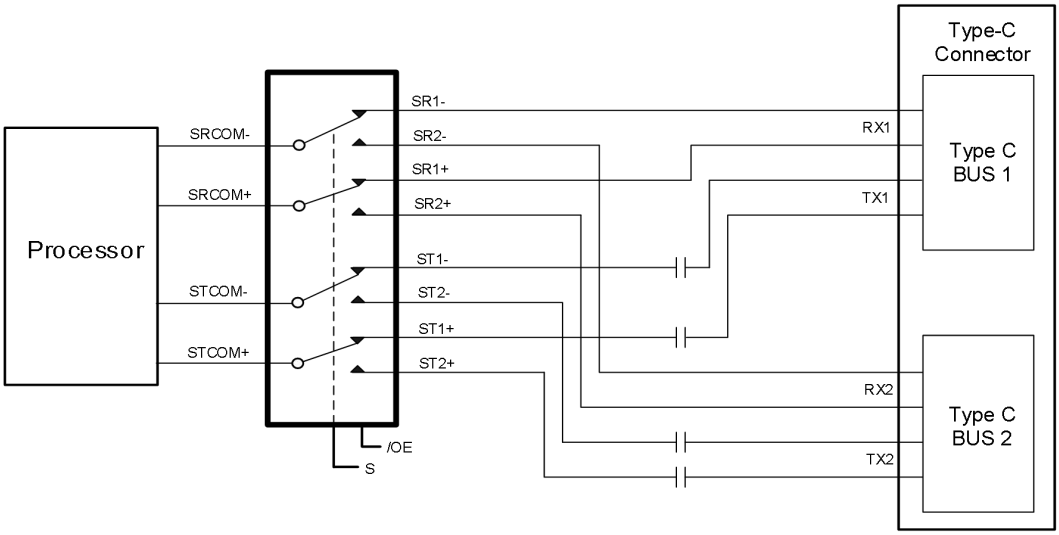

© 2024 DIOO MICROCIRCUITS CO., LTD

Ordering Information

Odering Part No.	Top Marking	MSL	RoHS	T_A	Package	
DIO3340QN18	D3DV	3	Green	-40 to 85°C	QFN2*3-18	Tape & Reel, 3000
DIO3340CN18	D3DV	3	Green	-40 to 85°C	QFN2*2-18	Tape & Reel, 3000

Pin Assignment

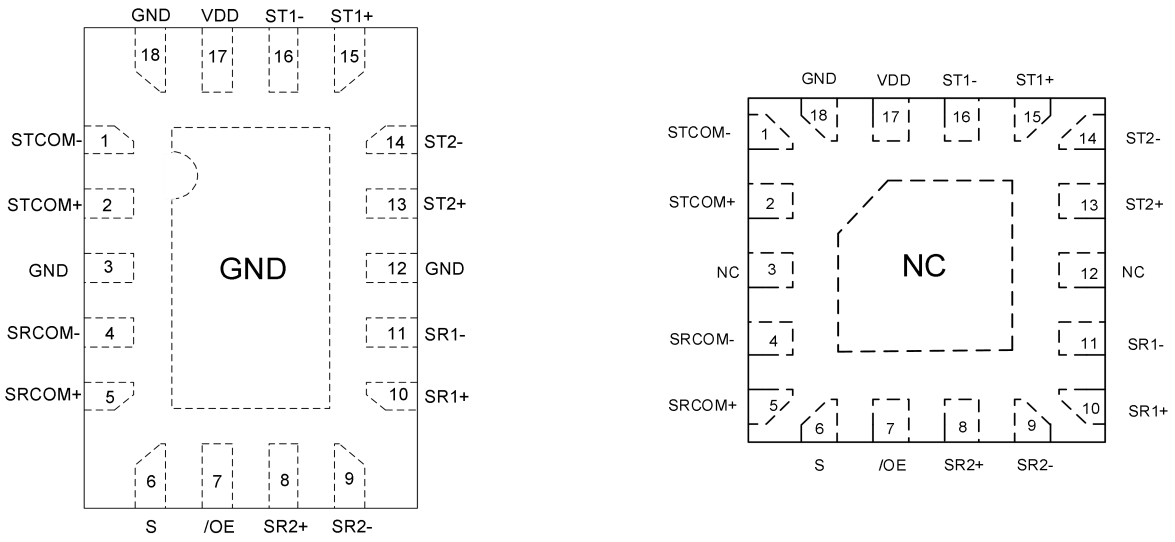

QFN2*3-18 QFN2*2-18

Figure 1. Top view

© 2024 DIOO MICROCIRCUITS CO., LTD

Pin Descriptions

Pin Name	Type	Description
STCOM-	SW	Super speed TX- common
STCOM+	SW	Super speed TX+ common
SRCOM-	SW	Super speed RX- common
SRCOM+	SW	Super speed RX+ common
S	Input	Switch select (0 = SW1, 1 = SW2)
/OE	Input	Output enable (0 = switches enabled, 1 = switches disabled)
SR2+	SW	Super speed RX2+
SR2-	SW	Super speed RX2-
SR1+	SW	Super speed RX1+
SR1-	SW	Super speed RX1-
ST2+	SW	Super speed TX2+
ST2-	SW	Super speed TX2-
ST1+	SW	Super speed TX1+
ST1-	SW	Super Speed TX1-
VDD	VDD	Device Power
GND	GND	Ground
NC	NC	No connection

© 2024 DIOO MICROCIRCUITS CO., LTD

Absolute Maximum Ratings

Stresses beyond those listed under the Absolute Maximum Rating table may cause permanent damage to the device. These are stress ratings only and functional operation of the device at these or any other condition beyond those indicated in the operational sections of the specifications is not implied. Exposure to absolute maximum rating conditions for extended periods may affect device reliability.

Symbol	Parameter	Rating	Unit
V_{DD}	Supply voltage	-0.5 to 6.0	V
V_{CNTRL}	DC input voltage (S, /OE) (1)	-0.5 to V_{DD}	V
V_{SW}	DC switch I/O voltage (1,2)	-0.3 to 2.1	V
I_{IK}	DC input diode current	-50	mA
I_{SW}	DC switch current	25	mA
T_{STG}	Storage temperature	-65 to 150	°C
ESD	Human-body model, JEDEC: JESD22-A114F	±3	kV
	Charged-device model, ANSI/ESDA/JEDEC JS-002	±2	kV

Note:

(1) The input and output negative ratings may be exceeded if the input and output diode current ratings are observed.

(2) V_{SW} refers to analog data switch paths.

Recommend Operating Conditions

The Recommended Operating Conditions table defines the conditions for actual device operation. Recommended Operating conditions are specified to ensure optimal performance to the datasheet specifications. DIOO does not Recommend exceeding them or designing to Absolute Maximum Ratings.

Symbol	Parameter	Rating	Unit
V_{DD}	Supply voltage	1.5 to 5.0	V
V_{CNTRL}	Control input voltage (S, /OE) (1)	0 to 5.0	V
V_{SW}	Switch I/O voltage (both SSUSB switch paths)	0 to 2.0	V
T_A	Operating temperature range	-40 to 85	°C

Note:

(1) The control inputs must be held HIGH or LOW; they must not float.

© 2024 DIOO MICROCIRCUITS CO., LTD

DC and Transient Characteristics

All typical values are at T_A = 25°C unless otherwise specified.

Symbol	Parameter	Conditions	V_{DD} (V)	Min	Typ	Max	Unit
V_{IH}	Control input voltage high	S, /OE	1.5	0.825			V
		S, /OE	1.8	0.85			
		S, /OE	2.5	1.3			
		S, /OE	3.6	1.4			
		S, /OE	5.0	1.5			
V_{IL}	Control input voltage low	S, /OE	1.5			0.375	V
		S, /OE	1.8			0.4	
		S, /OE	2.5			0.5	
		S, /OE	3.6			0.6	
		S, /OE	5.0			0.7	
I_{IN}	Control input leakage	V_{SW} = -0.6 to 2.0 V V_{CNTRL} = 0 to V_{DD}	5.0	-500		500	nA
I_{OZ}	Off-state leakage for open data paths	V_{SW} = 0.0 ≤ data ≤ 2.0 V	5.0	-0.5		0.5	μA
I_{CL}	On-state leakage for closed data paths(1)	V_{SW} = 0.0 ≤ data ≤ 2.0 V	5.0	-0.5		0.5	μA
I_{OFF}	Power-off leakage current (all I/O ports)	V_{SW} = 0 V or 2.0 V	0	-500		500	μA
R_{ON}	Switch on-resistance	V_{SW} = 0.2 V, I_{ON} = -8 mA	1.5		6	8	Ω
ΔR_{ON}	Difference in R_{ON} between positive-negative	V_{SW} = 0.2 V, I_{ON} = -8 mA	1.5		0.1		Ω
R_{ONF}	Flatness for R_{ON}	V_{SW} = 0.0 ≤ data ≤ 2.0 V, I_{ON} = -8 mA	1.5			0.5	Ω
I_{CC}	Quiescent supply current	$V_{/OE}$ = 0, V_{SEL} = 0 or V_{DD}, I_{OUT} = 0	3.6		15	25	μA
			5.0		21	30	
I_{CCZ}	Quiescent supply current (high impedance)	V_{SEL} = X, $V_{/OE}$ = V_{DD}, I_{OUT} = 0	5.0			0.5	μA
I_{CCT}	Increase in quiescent supply current per V_{CNTRL}	V_{SEL} or $V_{/OE}$ = 1.5 V	5.0		7	15	μA

Note:

(1) For this test, the data switch is closed with the respective switch pin floating.

(2) Specifications subject to change without notice.

© 2024 DIOO MICROCIRCUITS CO., LTD

AC Electrical Characteristics

All typical values are at V_{DD} = 3.6 V, T_A = 25°C, unless otherwise specified.

Symbol	Parameter	Conditions	V_{DD} (V)	Min	Typ	Max	Unit
t_{ON}	Turn-on time, S to output	R_L = 50 Ω, C_L = 0 pF, V_{SW} = 0 V, V_{SW} = 0.6 V	1.5 to 5.0		420	700	ns
t_{OFF}	Turn-off time, S to output	R_L = 50 Ω, CL = 0 pF, V_{SW} = 0 V, V_{SW} = 3.3 V	1.5 to 5.0		60	300	ns
$t_{ZHM,ZL}$	Enable time, /OE to output	R_L = 50 Ω, C_L = 0 pF, V_{SW} = 0.6 V	1.5 to 5.0		53	150	μs
$t_{LZM,HZ}$	Disable Time, /OE to output	R_L = 50 Ω, C_L = 0 pF, V_{SW} = 0.6 V	1.5 to 5.0		100	300	ns
t_{PD} (1)	Propagation delay	C_L = 0 pF, R_L = 50 Ω	1.5 to 5.0		60		ps
t_{BBM} (1)	Break-before-make	R_L = 50 Ω, C_L = 0 pF, V_{SW} = 0.6 V	1.5 to 5.0	120		600	ns
DO_{IRR} (1)	Differential off isolation	V_S = 0 dBm, R_L = 50 Ω, f = 2.5 GHz	3.6		-27		dB
		V_S = 0 dBm, R_L = 50 Ω, f = 5.0 GHz			-20		dB
SDDNEXT (1)	Differential channel crosstalk	V_S = 0 dBm, R = 50 Ω, f = 2.5 GHz	3.6		-55		dB
		V_S = 0 dBm, R = 50 Ω, f = 5.0 GHz			-47		dB
DIL (1)	Differential insertion loss (all data paths)	V_{IN} = 0 dBm, f = 2.5 GHz, R_L = 50 Ω, C_L = 0 pF	3.6		-0.9		dB
		V_{IN} = 0 dBm, f = 5.0 GHz, R_L = 50 Ω, C_L = 0 pF			-1.4		
BW (1)	Differential -3 dB bandwidth	V_{IN} = 1 Vpk-pk, R_L = 50 Ω, C_L = 0 pF (both data paths)	3.6		11		GHz
$t_{sk(P)}$ (2)	Skew of opposite transitions of the same output	R_{PU} = 50 Ω to V_{DD}, C_L = 0 pF	3.6		6		ps
C_{IN} (1)	Control pin input capacitance	V_{DD} = 0 V, f = 1 MHz			2.7		pF
C_{ON} (1)	On capacitance	V_{DD} = 3.3 V, f = 2.5 GHz			0.45		pF
C_{OFF} (1)	Off capacitance	V_{DD} = 3.3 V, f = 2.5 GHz			0.36		pF

Note:

(1) Guaranteed by characterization.

(2) Guaranteed by design.

(3) Specifications subject to change without notice

© 2024 DIOO MICROCIRCUITS CO., LTD

Typical Performance Characteristics

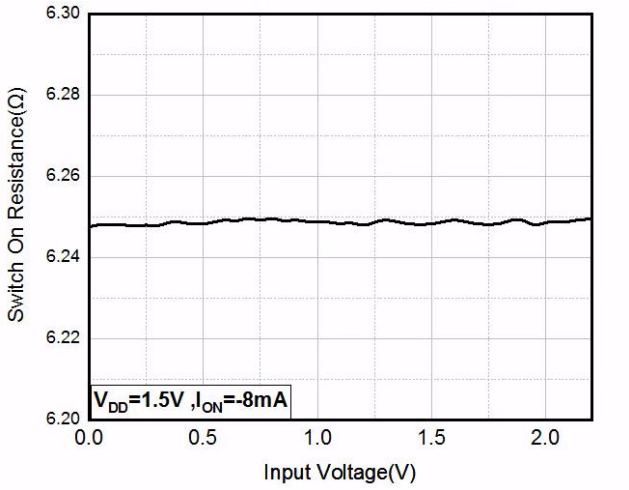

Figure 2. R_{ON} vs. V_{IN}

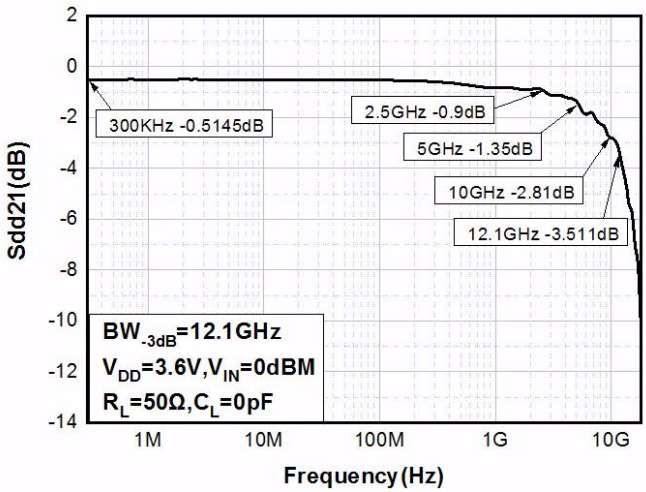

Figure 3. Differential -3 dB bandwidth

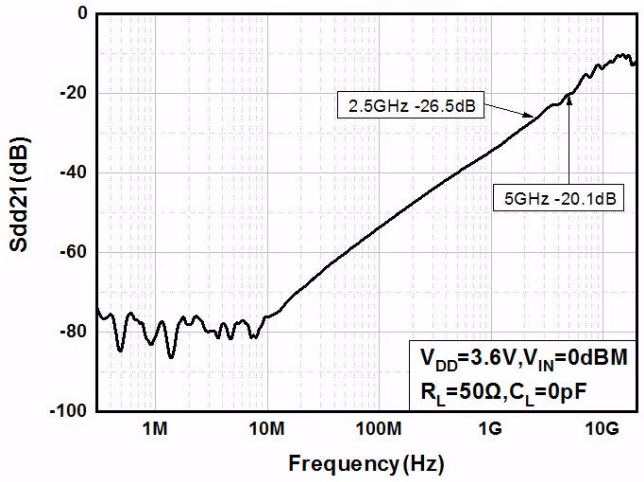

Figure 4. Differential off isolation

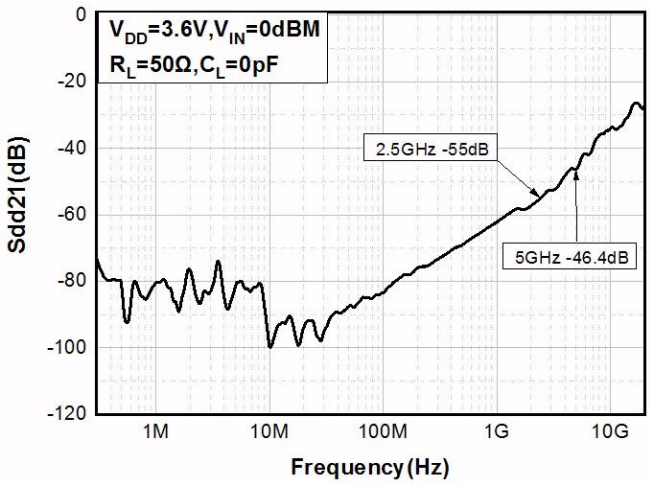

Figure 5. Differential channel crosstalk

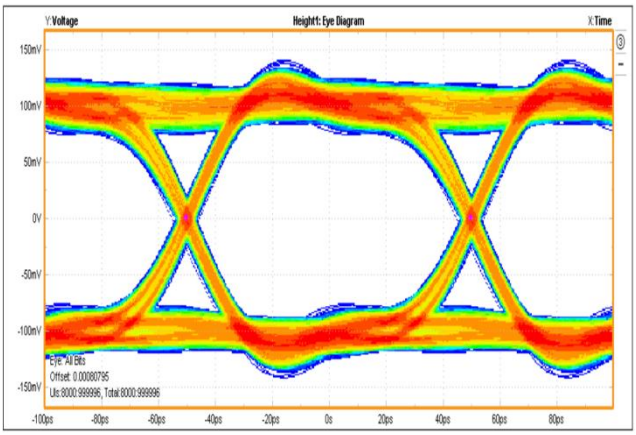

Before switch

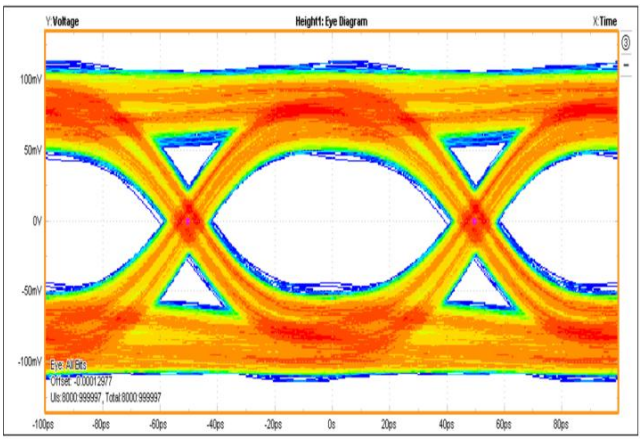

After switch

Figure 6. Eye opening at 10Gb/s by using PRBS15 pattern

© 2024 DIOO MICROCIRCUITS CO., LTD

Typical Applications

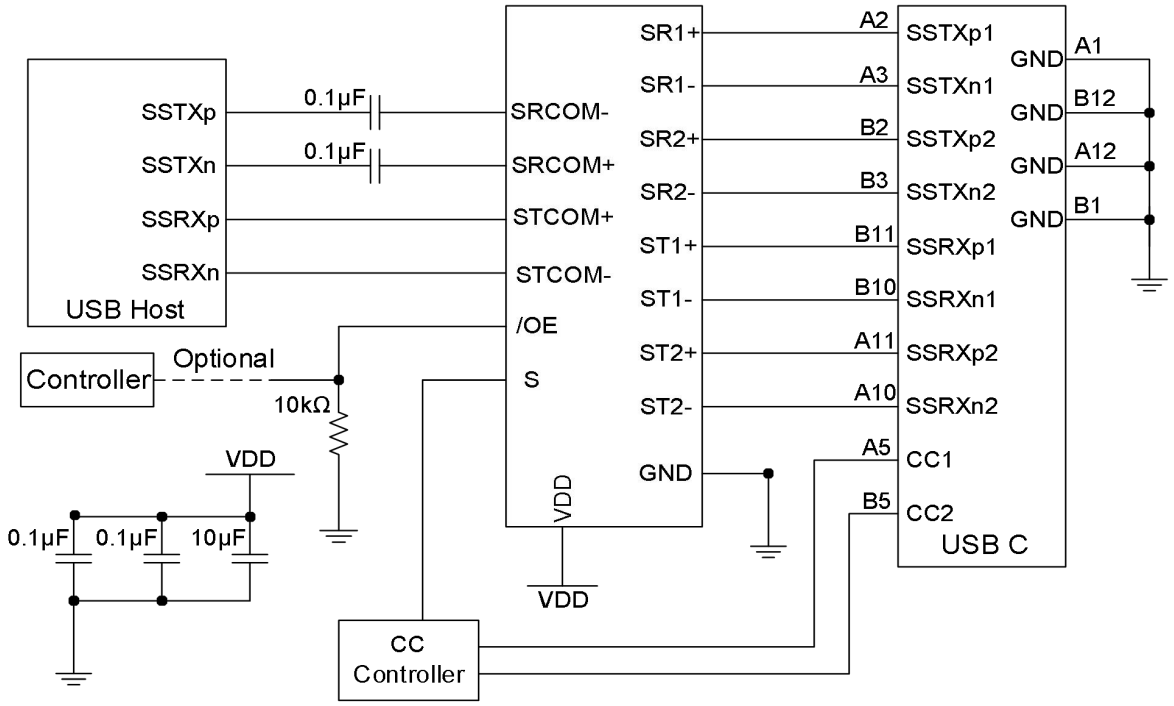

Figure 7. Down facing port for USB3.1 type C connector

Systems Examples

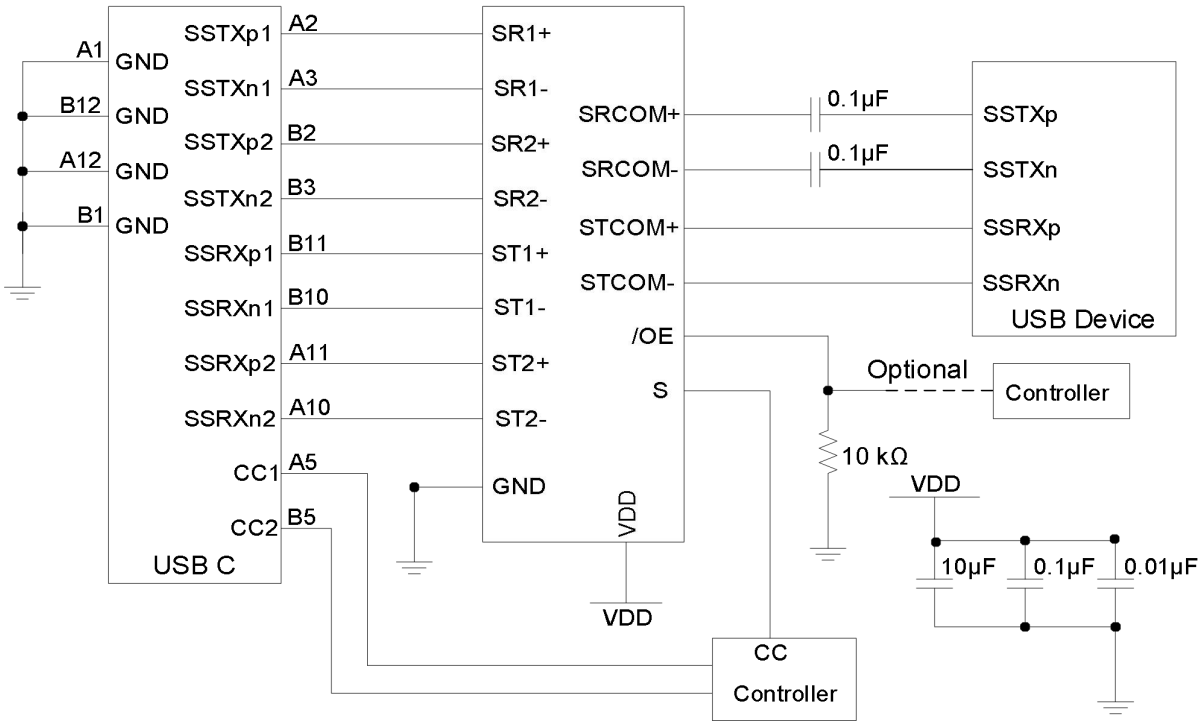

Figure 8. Up facing port for USB3.1 USB type-C connector

© 2024 DIOO MICROCIRCUITS CO., LTD

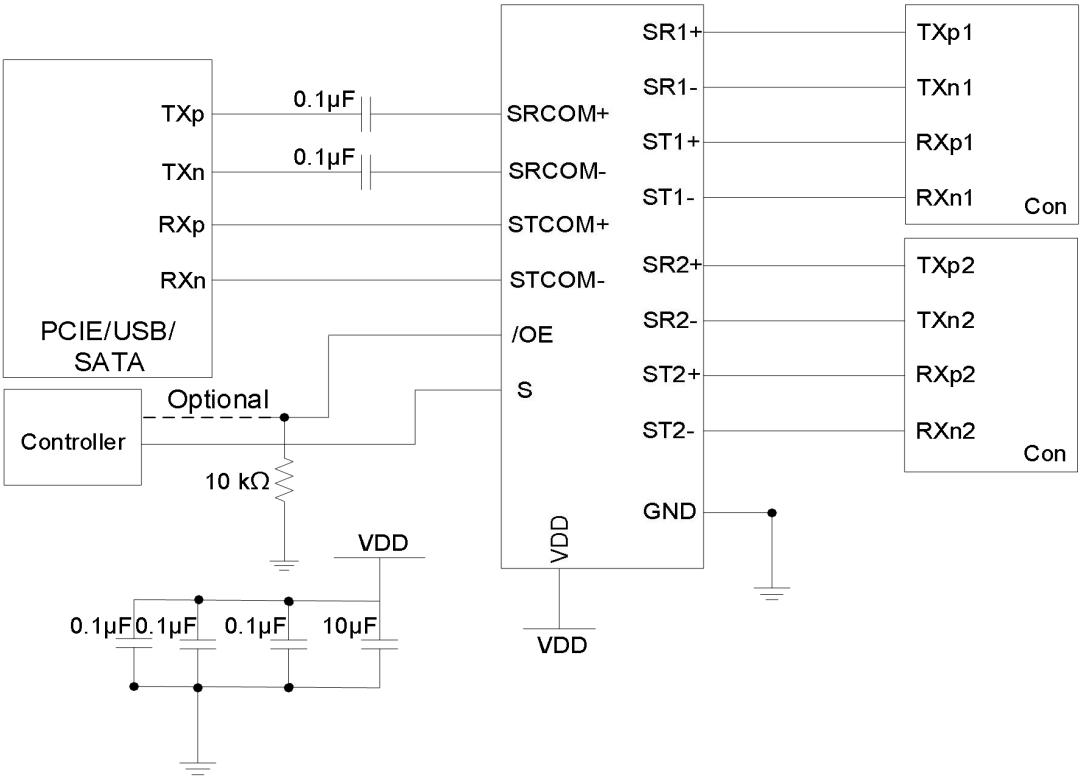

Figure 9. PCIE motherboard

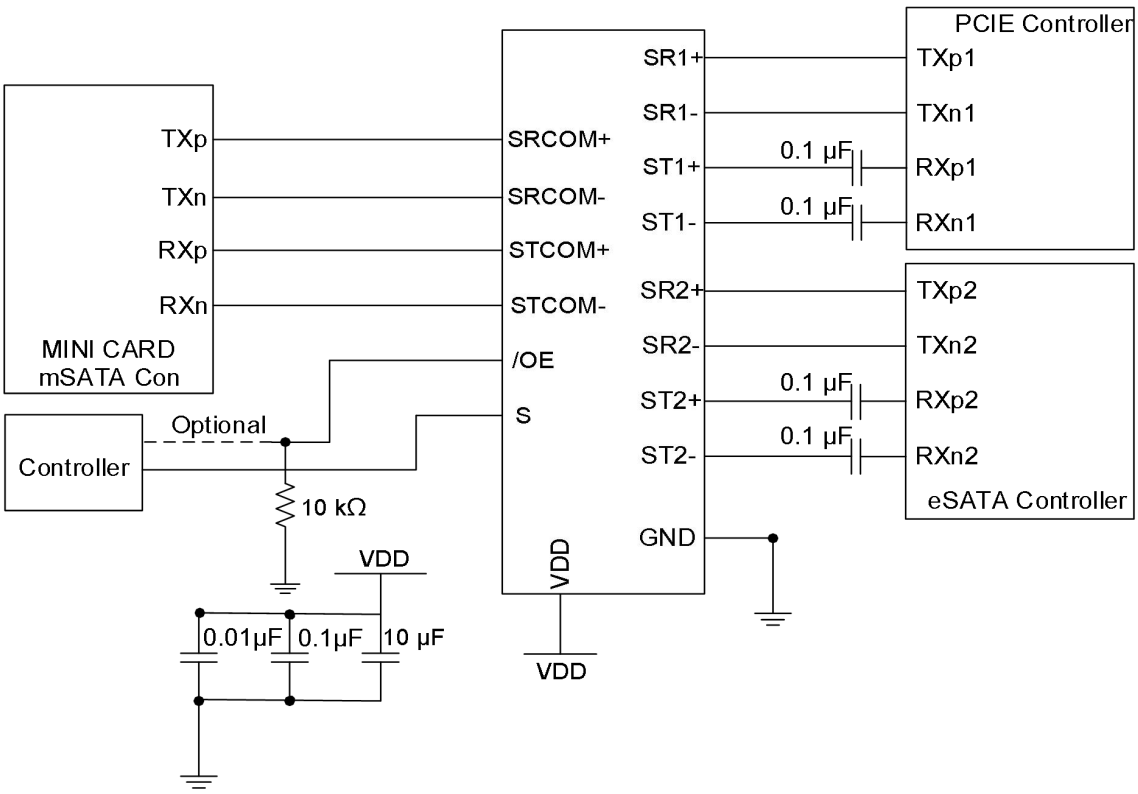

Figure10. PCIE and eSATA combo

© 2024 DIOO MICROCIRCUITS CO., LTD

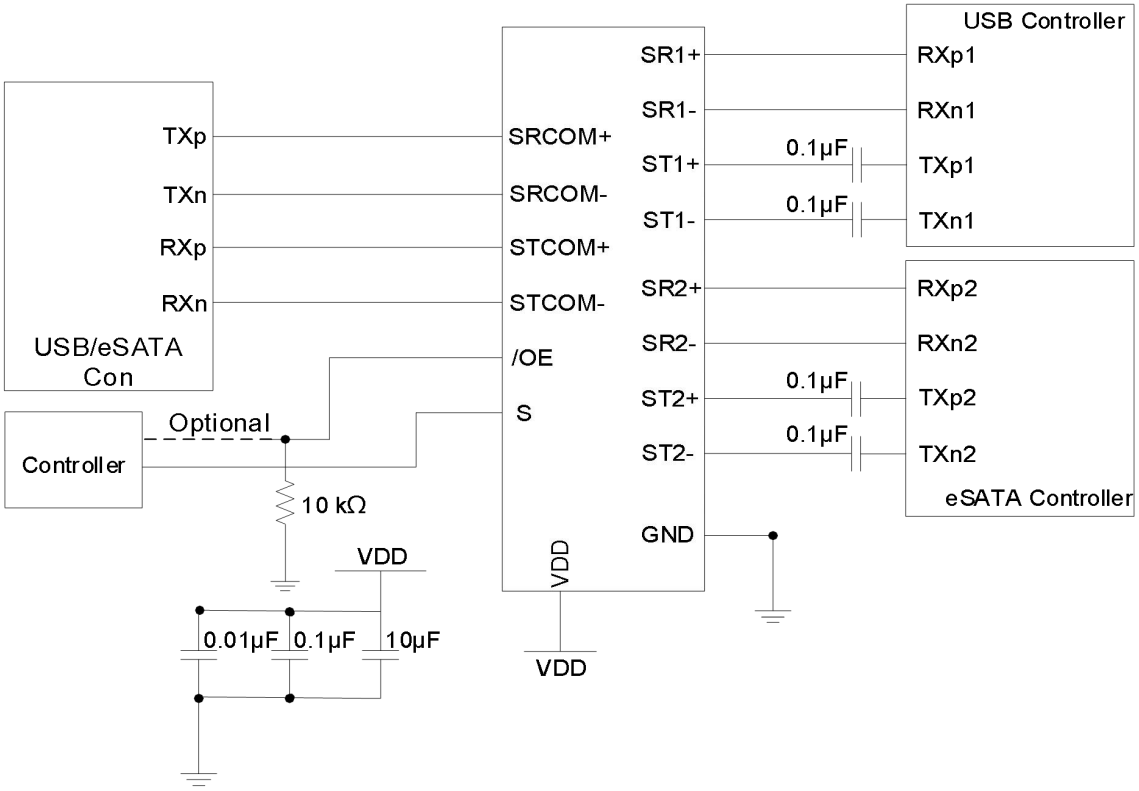

Figure 11. eSATA and USB 3.0 combo connector

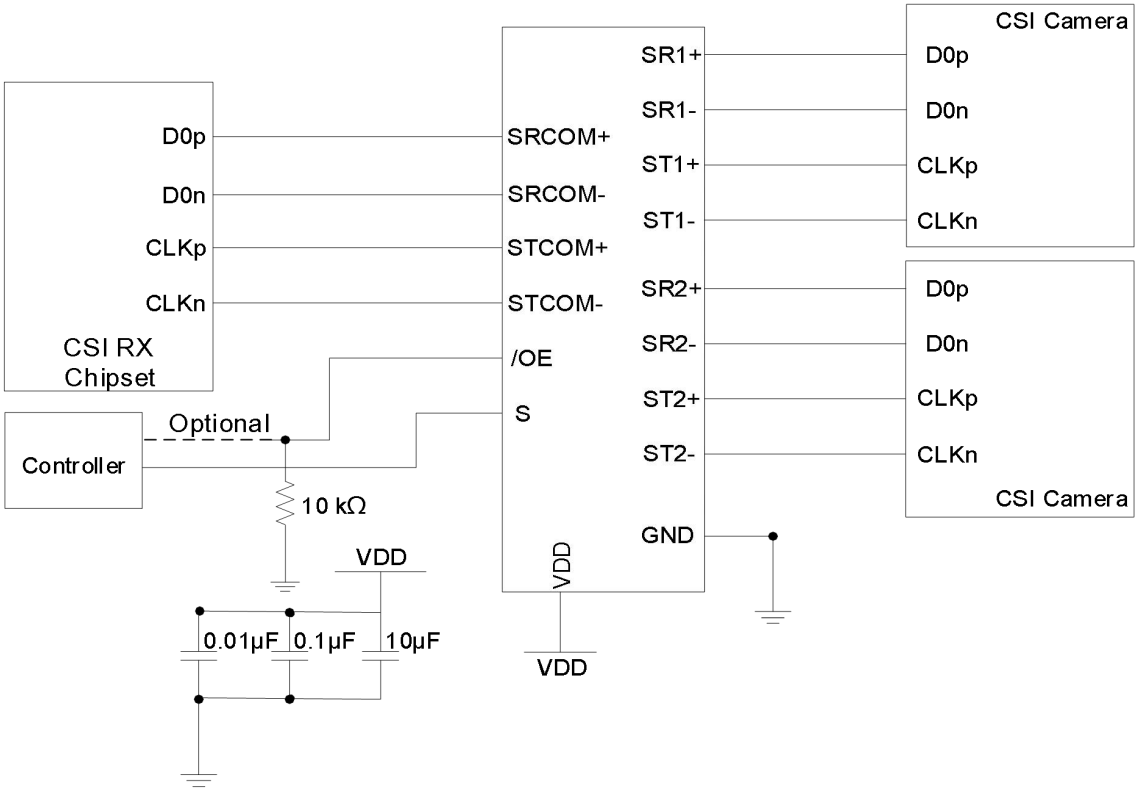

Figure 12. CSI camera array

© 2024 DIOO MICROCIRCUITS CO., LTD

Physical Dimensions: QFN2*3-18

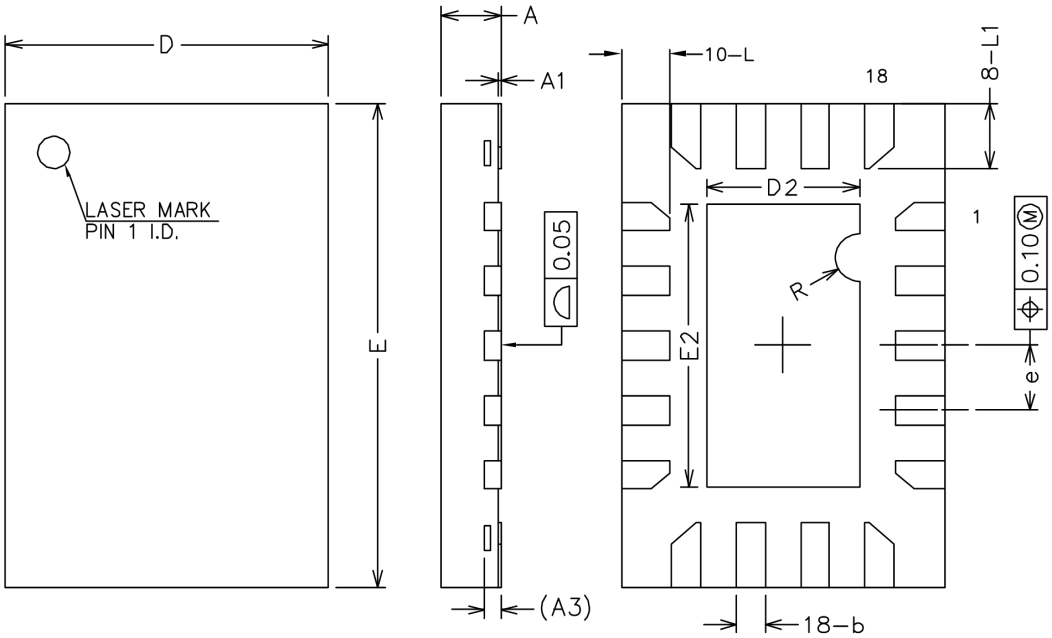

TOP VIEW SIDE VIEW BOTTOM VIEW

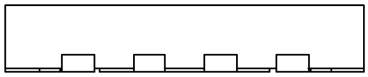

SIDE VIEW

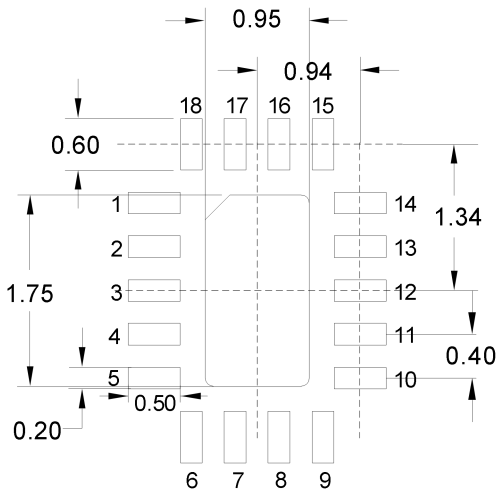

LAND PATTERN RECOMMENDATION

Common Dimensions (Units of measure = Millimeter)			
Symbol	**Min**	**Nom**	**Max**
A	0.50	0.55	0.60
A1	0	0.02	0.05
A3	0.10 REF		
b	0.13	0.18	0.23
D	1.90	2.00	2.10
E	2.90	3.00	3.10
D2	0.85	0.95	1.05
E2	1.65	1.75	1.85
e	0.30	0.40	0.50
L	0.25	0.30	0.35
L1	0.35	0.40	0.45
R	0.15 REF		

© 2024 DIOO MICROCIRCUITS CO., LTD

Physical Dimensions: QFN2*2-18

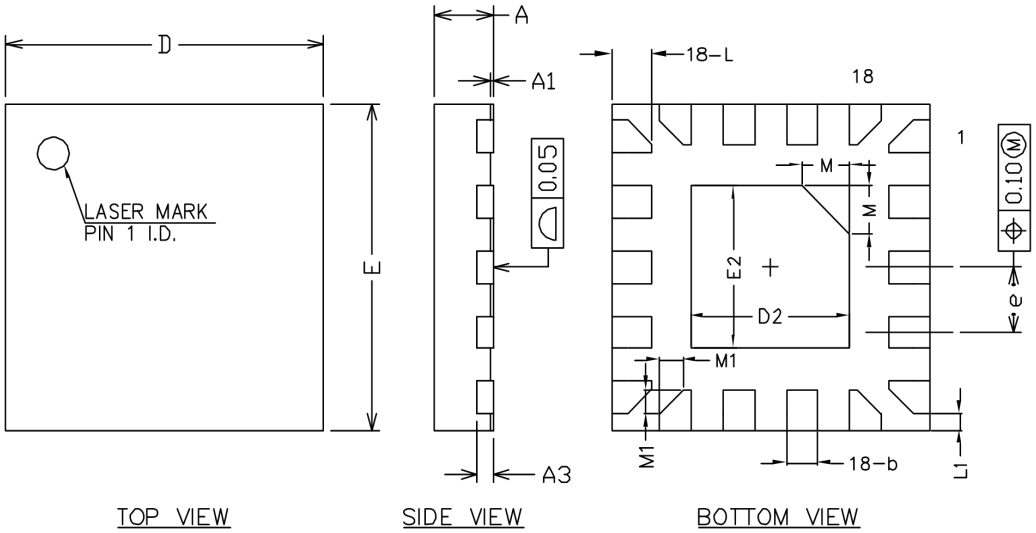

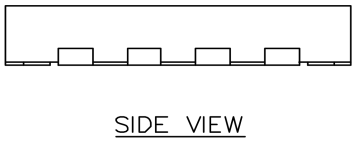

Common Dimensions (Units of measure = Millimeter)			
Symbol	**Min**	**Nom**	**Max**
A	0.50	0.55	0.60
A1	0	0.02	0.05
A3	0.10 REF		
b	0.15	0.20	0.25
D	1.90	2.00	2.10
E	1.90	2.00	2.10
D2	0.90	1.00	1.10
E2	0.90	1.00	1.10
e	0.30	0.40	0.50
L	0.20	0.25	0.30
L1	0.05	0.10	0.15
M	0.30 REF		
M1	0.15 REF		

© 2024 DIOO MICROCIRCUITS CO., LTD

CONTACT US

Dioo is a professional design and sales corporation for high-quality and performance analog semiconductors. The company focuses on industry markets, such as cell phones, handheld products, laptops, medical equipment, and so on. Dioo's product families include analog signal processing and amplifying, LED drivers, and charger ICs. Go to http://www.dioo.com for a complete list of Dioo product families.

For additional product information or full datasheet, please contact our sales department or representatives.

© 2024 DIOO MICROCIRCUITS CO., LTD

Mouser Electronics

Authorized Distributor

Click to View Pricing, Inventory, Delivery & Lifecycle Information:

DIOO:

DIO3340QN18