Customer Information Sheet

IF IN DOUBT - ASK	©	NOT TO SCALE	THIRD ANGLE PROJECTION	ALL DIMENSIONS IN mm

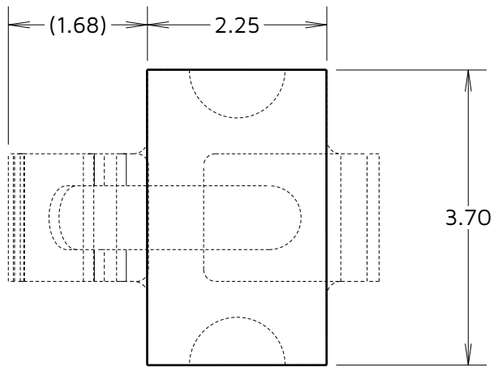

RECOMMENDED PCB PAD LAYOUT
(ALL TOLERANCES ±0.05mm)

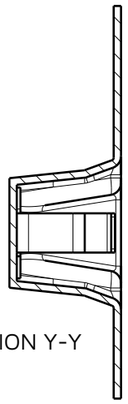

SECTION Y-Y

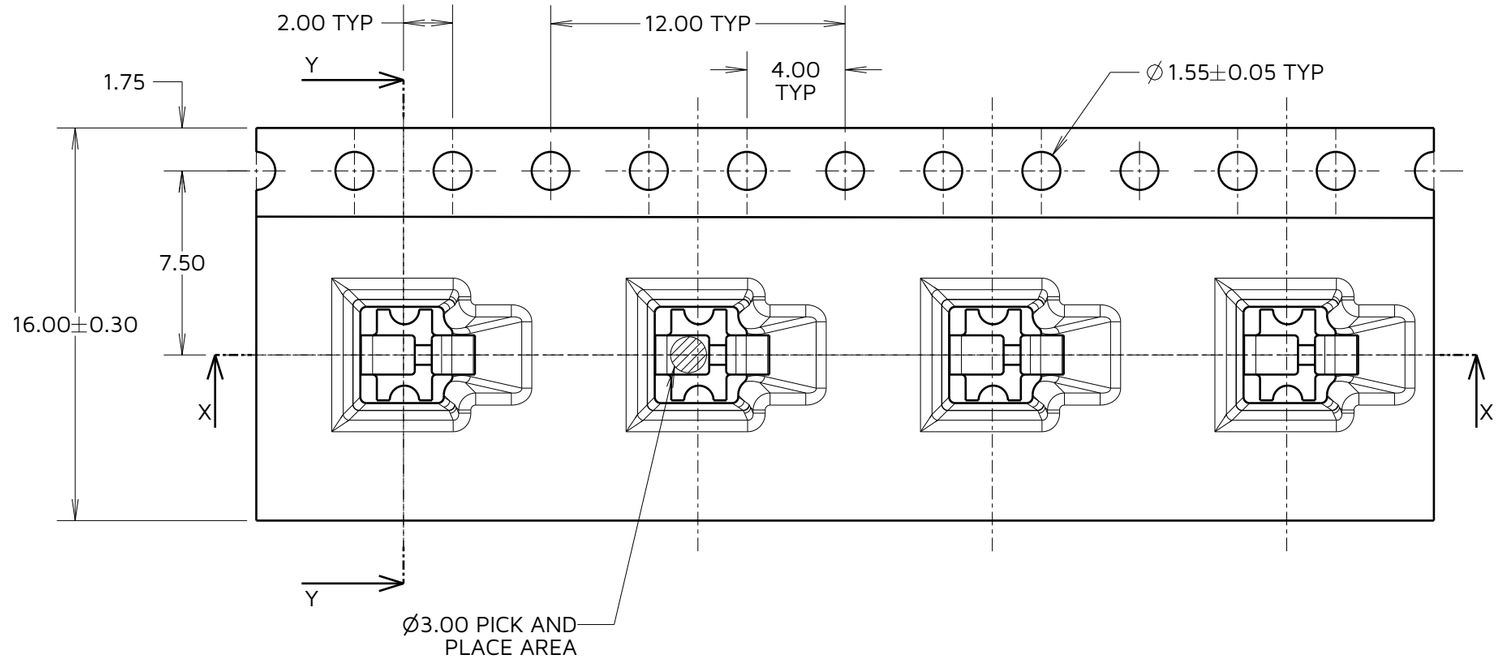

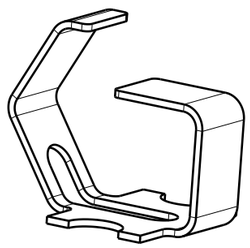

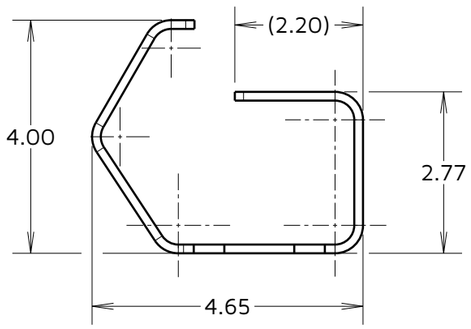

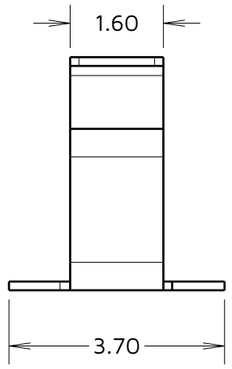

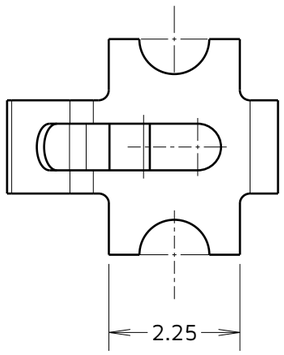

COMPONENT
DETAILS

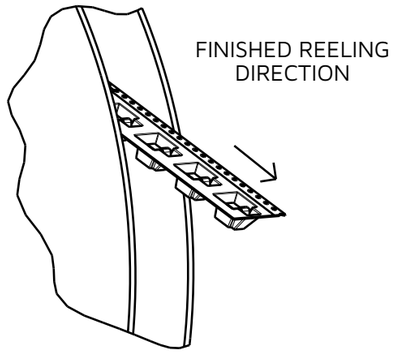

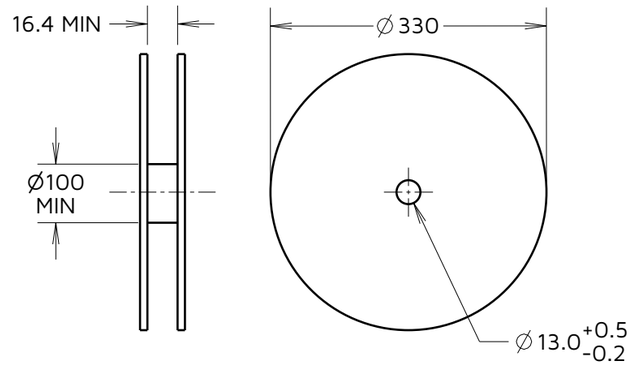

REEL DETAILS

NOTES:
1. QUANTITY OF COMPONENTS PER REEL = 1,100 PCS.
2. THIS PRODUCT IS TAPED AND REELED IN ACCORDANCE WITH EIA-481 (ELETRONICS INDUSTRIES ASSOCIATION).
3. SEE COMPONENT SPEC C055XX FOR FULL SPECIFICATION (LATEST ISSUE).
4. SEE SHEET 3 FOR RECOMMENDED DEFLECTION DIMENSIONS.

RTP	1	24.04.23	32471
NAME	ISS.	DATE	CN/CO
APPROVED:	S.BENNETT		
CHECKED:	A.BOXALL		
DRAWN:	R.PORTLOCK		
ASSEMBLY DRG:			

HARWIN
www.harwin.com

TOLERANCES
X. = ±1mm
X.X = ±0.50mm
X.XX = ±0.20mm
X.XXX = ±0.01mm
ANGLES = ±5°
UNLESS STATED

THIS DRAWING AND ANY INFORMATION OR DESCRIPTIVE MATTER SET OUT HEREON ARE CONFIDENTIAL AND COPYRIGHT PROPERTY OF THE HARWIN GROUP AND MUST NOT BE DISCLOSED, LOANED, COPIED OR USED FOR MANUFACTURING, TENDERING OR FOR ANY OTHER PURPOSE WITHOUT THEIR WRITTEN PERMISSION.

MATERIAL:
SEE SHEET 3

TITLE:
MULTI-DIRECTIONAL SPRING CONTACT IN TAPE AND REEL

DRAWING NUMBER:
S1921-46R

SHT 2 OF 3

Customer Information Sheet

IF IN DOUBT - ASK	©	NOT TO SCALE	THIRD ANGLE PROJECTION	ALL DIMENSIONS IN mm

S1921-46R
DEFLECTION FROM ABOVE

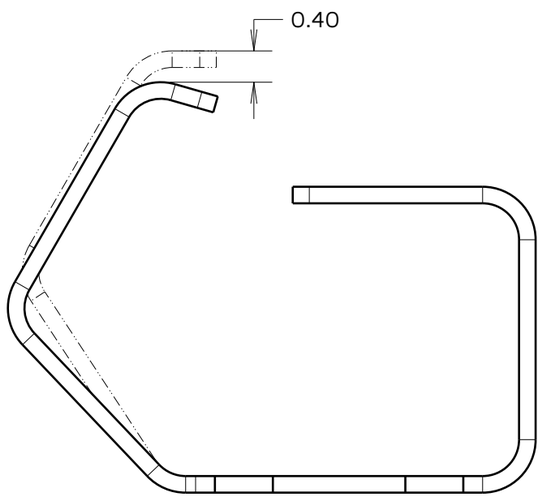

MAXIMUM RECOMMENDED VERTICAL
DEFLECTION = 0.40mm

MINIMUM RECOMMENDED VERTICAL
DEFLECTION = 0.15mm

MINIMUM FORCE OF 2.0N

S1921-46R
DEFLECTION FROM FRONT

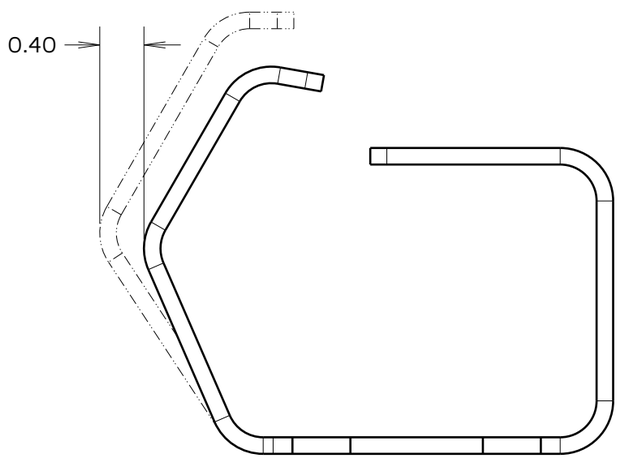

MAXIMUM RECOMMENDED HORIZONTAL
DEFLECTION = 0.40mm

MINIMUM RECOMMENDED HORIZONTAL
DEFLECTION = 0.15mm

MINIMUM FORCE OF 0.7N

COMPONENT SPECIFICATION:
MATERIAL = CUPRO NICKEL
FINISH = 3µm 100% TIN OVER 2µm NICKEL
(SEE C055XX FOR FULL COMPONENT SPECIFICATION)

RTP	1	24.04.23	32471
NAME	ISS.	DATE	CN/CO
APPROVED: S.BENNETT			
CHECKED: A.BOXALL			
DRAWN: R.PORTLOCK			
ASSEMBLY DRG:			

HARWIN
www.harwin.com

TOLERANCES
X. = ±1mm
X.X = ±0.50mm
X.XX = ±0.20mm
X.XXX = ±0.01mm
ANGLES = ±5°
UNLESS STATED

THIS DRAWING AND ANY INFORMATION OR DESCRIPTIVE MATTER SET OUT HEREON ARE CONFIDENTIAL AND COPYRIGHT PROPERTY OF THE HARWIN GROUP AND MUST NOT BE DISCLOSED, LOANED, COPIED OR USED FOR MANUFACTURING, TENDERING OR FOR ANY OTHER PURPOSE WITHOUT THEIR WRITTEN PERMISSION.

MATERIAL:
SEE ABOVE

TITLE:
MULTI-DIRECTIONAL SPRING CONTACT IN TAPE AND REEL

DRAWING NUMBER:
S1921-46R

SHT 3 OF 3

Mouser Electronics

Authorized Distributor

Click to View Pricing, Inventory, Delivery & Lifecycle Information:

Harwin:
S1921-46R