Other

esp-dev-kits Documentation

Release master
Espressif Systems
Aug 01, 2025

Table of contents

Table of contents i

1 ESP-Prog 3
- 1.1 ESP-Prog . . . 3
  - 1.1.1 Getting Started . . . 3
  - 1.1.2 Hardware Reference . . . 6
  - 1.1.3 Related Documents . . . 7
- 1.2 Reference Documentation . . . 8
  - 1.2.1 Introduction to Functions . . . 8

2 ESP-Prog-2 13
- 2.1 ESP-Prog-2 . . . 13
  - 2.1.1 Getting Started . . . 13
  - 2.1.2 Hardware Reference . . . 16
  - 2.1.3 Related Documents . . . 19
- 2.2 Reference Documentation . . . 19
  - 2.2.1 Introduction to Functions . . . 19

3 ESP-Module-Prog-1(R) 23
- 3.1 ESP-Module-Prog-1(R) . . . 23
  - 3.1.1 Board Overview . . . 23
  - 3.1.2 Start Application Development . . . 27
  - 3.1.3 Hardware Reference . . . 28
  - 3.1.4 Sample Request . . . 31
  - 3.1.5 Related Documents . . . 31

4 ESP-Module-Prog-SUB-02 33
- 4.1 ESP-Module-Prog-SUB-02 . . . 33
  - 4.1.1 Board Overview . . . 33
  - 4.1.2 Start Application Development . . . 35
  - 4.1.3 Hardware Reference . . . 36
  - 4.1.4 Sample Request . . . 38
  - 4.1.5 Related Documents . . . 38

5 ESP-Module-Prog-SUB-01&04 41
- 5.1 ESP-Module-Prog-SUB-01&04 . . . 41
  - 5.1.1 Board Overview . . . 41
  - 5.1.2 Start Application Development . . . 43
  - 5.1.3 Hardware Reference . . . 44
  - 5.1.4 Sample Request . . . 46
  - 5.1.5 Related Documents . . . 46

6 Related Documentation and Resources 49
- 6.1 Developer Zone . . . 49
- 6.2 Products . . . 49
- 6.3 Contact Us . . . 49

7 Disclaimer and Copyright Notice 51

This document provides detailed user guides for Espressif debugging and flashing boards that fit different SoCs.

Note: For the full list of Espressif development boards, please go to ESP DevKits.

Chapter 1

ESP-Prog

ESP-Prog is one of Espressif' s development and debugging tools, with functions including automatic firmware downloading, serial communication, and JTAG online debugging.

1.1 ESP-Prog

This user guide will help you get started with ESP-Prog and will also provide more in-depth information.

ESP-Prog is one of Espressif' s development and debugging tools, with functions including automatic firmware downloading, serial communication, and JTAG debugging. ESP-Prog' s automatic firmware downloading and serial communication functions are supported on ESP8266, ESP32, ESP32-S2, ESP32-S3, and ESP32-C3, while the JTAG debugging is supported only on ESP32, ESP32-S2, ESP32-S3, and ESP32-C3.

ESP-Prog can be easily connected to a PC with the use of only one USB cable. Then, the PC can identify the board' s Program and JTAG interfaces (functions) by their port numbers.

Given that the power supply voltage may vary on different user boards, either of the ESP-Prog interfaces can provide 5 V or 3.3 V power supply through pin headers, in order to ensure power compatibility. Power on ESP-Prog could be toggled between 3.3 V and 5 V, but the RX/TX & JTAG signals will always be at the 3.3 V level.

The document consists of the following major sections:

- *Getting started*: Overview of the board and hardware/software setup instructions to get started.
- *Hardware Reference*: More detailed information about the board' s hardware.
- *Related Documents*: Links to related documentation.

1.1.1 Getting Started

This section provides a brief introduction of ESP-Prog on how to do the initial hardware setup.

Description of Components

The key components of the board are described in a clockwise direction.

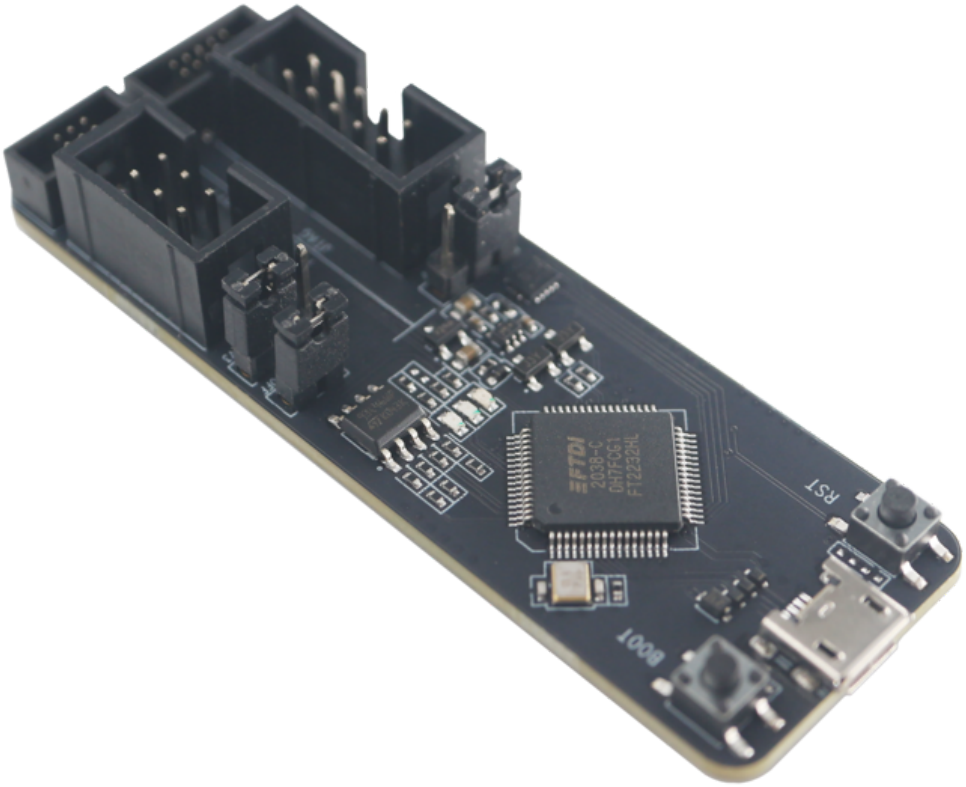

Fig. 1: ESP-Prog (click to enlarge)

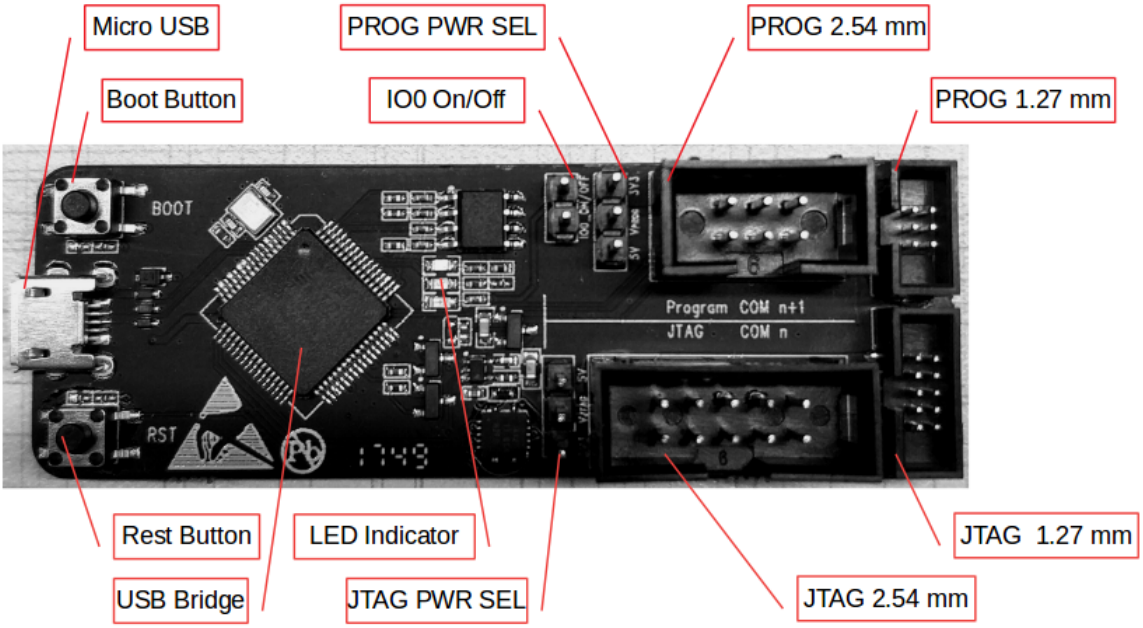

Fig. 2: ESP-Prog - front (click to enlarge)

Key Component	Description
Micro USB	Interface between PC and ESP-Prog.
Boot Button	Download button. Holding down boot and then pressing reset initiates Firmware Download mode for downloading firmware through the serial port.
IO0 On/Off	Pin Header to set the state of GPIO0 strapping pin.
PROG PWR SEL	Pin Header to select power input for the Program interface.
PROG 2.54 mm	Program interface with 2.54 mm (0.1") pin pitch.
PROG 1.27 mm	Program interface with 1.27 mm (0.05") pin pitch.
JTAG 1.27 mm	JTAG interface with 1.27 mm (0.05") pin pitch.
JTAG 2.54 mm	JTAG interface with 2.54 mm (0.1") pin pitch.
JTAG PWR SEL	Pin Header to select power input for the JTAG interface.
LED Indicator	LED to indicate ESP-Prog state. There are three LED modes: red, green, and blue. The red LED lights up when the system is connected to the 3.3 V power. The green LED lights up when ESP-Prog is downloading data. The blue LED lights up when ESP-Prog is receiving data.
USB Bridge	Single USB-to-UART bridge chip provides up to 3 Mbps of transfer rate.
Reset Button	Press this button to restart the system.

Start Application Development

Before powering up your board, please make sure that it is in good condition with no obvious signs of damage.

Required Hardware

- ESP-Prog
- USB 2.0 cable (Standard-A to Micro-B)
- Computer running Windows, Linux, or macOS
- Dupont lines or flat cables provided by Espressif for connecting the development board to ESP-Prog

Note: Be sure to use an appropriate USB cable. Some cables are for charging only and do not provide the needed data lines nor work for programming the boards.

Hardware Setup

1. Connect the ESP-Prog board and the PC USB port via a USB cable.
2. The PC then detects the two ports of ESP-Prog, indicating that the board is connected successfully. If the ports are not detected install the FT2232HL chip driver on your PC.
3. Select the output power voltage for the Program/JTAG interfaces, using PROG PWR SEL/JTAG PWR SEL pin headers.
4. Connect the ESP-Prog and ESP user board with the flat cables provided by Espressif.
5. Start programming (downloading) or JTAG debugging, using the official software tools or scripts provided by Espressif.

Software Setup Please proceed to Get Started with ESP-IDF, where Section Installation Step by Step will quickly help you set up the development environment.

Contents and Packaging

Retail Orders Each ESP-Prog board comes in an individual package.

The contents are as follows:

- Development board
  ESP-Prog

Fig. 3: ESP-Prog Package Contents

- Cables
  Two flexible flat cables:
  - One cable for JTAG 1.27 mm interface to connect to 2*5-PIN male shrouded box header.
  - One cable for PROG 1.27 mm interface to connect to 2*3-PIN male shrouded box header.

If you order a few samples, each board comes in an individual package in either antistatic bag or any packaging depending on your retailer.

For retail orders, please go to https://www.espressif.com/en/company/contact/buy-a-sample.

Wholesale Orders If you order in bulk, the boards come in large cardboard boxes.

For wholesale orders, please go to https://www.espressif.com/en/contact-us/sales-questions.

1.1.2 Hardware Reference

Block Diagram

The block diagram below shows the components of ESP-Prog and their interconnections.

Power Supply Options There are three mutually exclusive ways to provide power to the board:

- ESP-Prog USB Port, default power supply (recommended)
- 5 V and G (GND) pins
- 3.3 V and G (GND) pins

Header Block

The two tables below provide the **Name** and **Function** of the pins on both sides of the board (Program Interface and JTAG Interface). The pin names are shown in the front view of the ESP-Prog board. The numbering is the same as in the ESP-Prog Schematic (PDF).

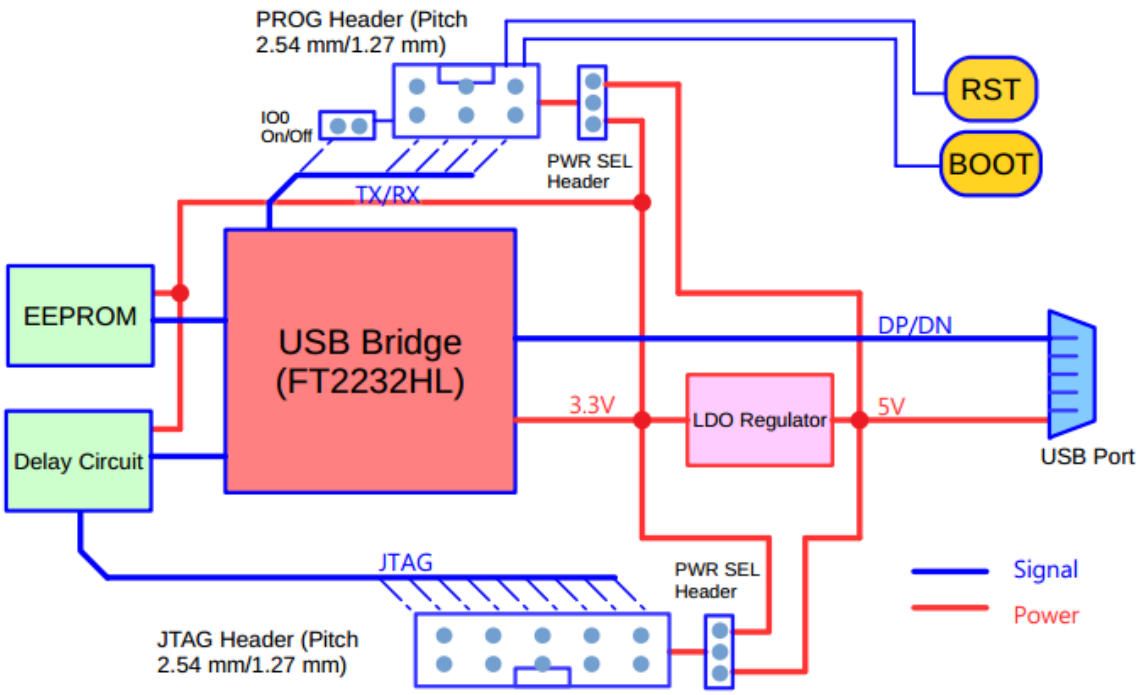

Fig. 4: ESP-Prog Block Diagram (click to enlarge)

Program Interface

No.	Name	Function
1	ESP_EN	Enable signal
2	VDD	Power supply
3	ESP_TXD	TX pin
4	GND	Ground
5	ESP_RXD	RX pin
6	ESP_IO0	Strapping pin

JTAG Interface

No.	Name	Function
1	VDD	Power supply
2	ESP_TMS	JTAG TMS pin, mode selection
3	GND	Ground
4	ESP_TCK	JTAG TCK pin, clock input
5	GND	Ground
6	ESP_TDO	JTAG TDO pin
7	GND	Ground
8	ESP_TDI	JTAG TDI pin
9	GND	Ground
10	NC	None

1.1.3 Related Documents

Please download the following documents from the HTML version of esp-dev-kits Documentation.

- ESP-Prog Schematic (PDF)
- ESP-Prog PCB Layout (PDF)

- ESP-Prog Dimensions (PDF)

For further design documentation for the board, please contact us at sales@espressif.com.

1.2 Reference Documentation

1.2.1 Introduction to Functions

The Working Mode of USB Bridge

ESP-Prog uses FT2232HL, which is provided by FTDI, as its USB Bridge Controller chip. The board can be configured to convert the USB 2.0 interface to serial and parallel interfaces that support a wide range of industry standards. ESP-Prog uses FT2232HL' s default dual-asynchronous serial interface mode available after installing the FT2232HL chip driver on their PCs.

Note: The PC is able to identify the ESP-Prog' s two ports by their port numbers. The bigger port number represents the Program interface, while the other one represents the JTAG interface.

Communication Interface

ESP-Prog can connect to ESP32 user boards using both the Program interface and the JTAG interface.

- **Program Interface**
  The Program interface has six pins, including the UART interface (ESP_TXD, ESP_RXD), boot mode selection pin (ESP_IO0) and reset pin (ESP_EN). The design for the Program interface on the user board should follow the reference provided in the figure below.
- **JTAG Interface**
  The design for the JTAG interface on the user board should follow the reference provided in the figure below.
- **Fool-proof Design**
  The ESP-Prog board uses header connectors (DC3-6P/DC3-10P) which support reverse-current circuitry protection. In such cases, it is recommended that users also use header connectors on their user boards, such as `FTSH-105-01-S-DV-*` or `DC3-*P`.

Note: Keying of the plugs and sockets to insert the plug is in one specific orientation, which means each socket of ESP-Prog corresponds to the plugs on the cable and using a mismatched cable might lead to a wrong order of connection. Please use the cables provided by Espressif.

Automatic Downloading Function

ESP-Prog supports automatic downloading. After connecting the Program interface of ESP-Prog to the user board, the downloading program can download data or run programs automatically by controlling the states of the start-mode selection pin (ESP_IO0) and reset pin (ESP_EN), which spares the users from manually restarting the device and selecting the downloading modes. The two buttons on the ESP-Prog board enable users to reset and control the boot mode of the device manually.

The schematics of the automatic downloading circuit is displayed below.

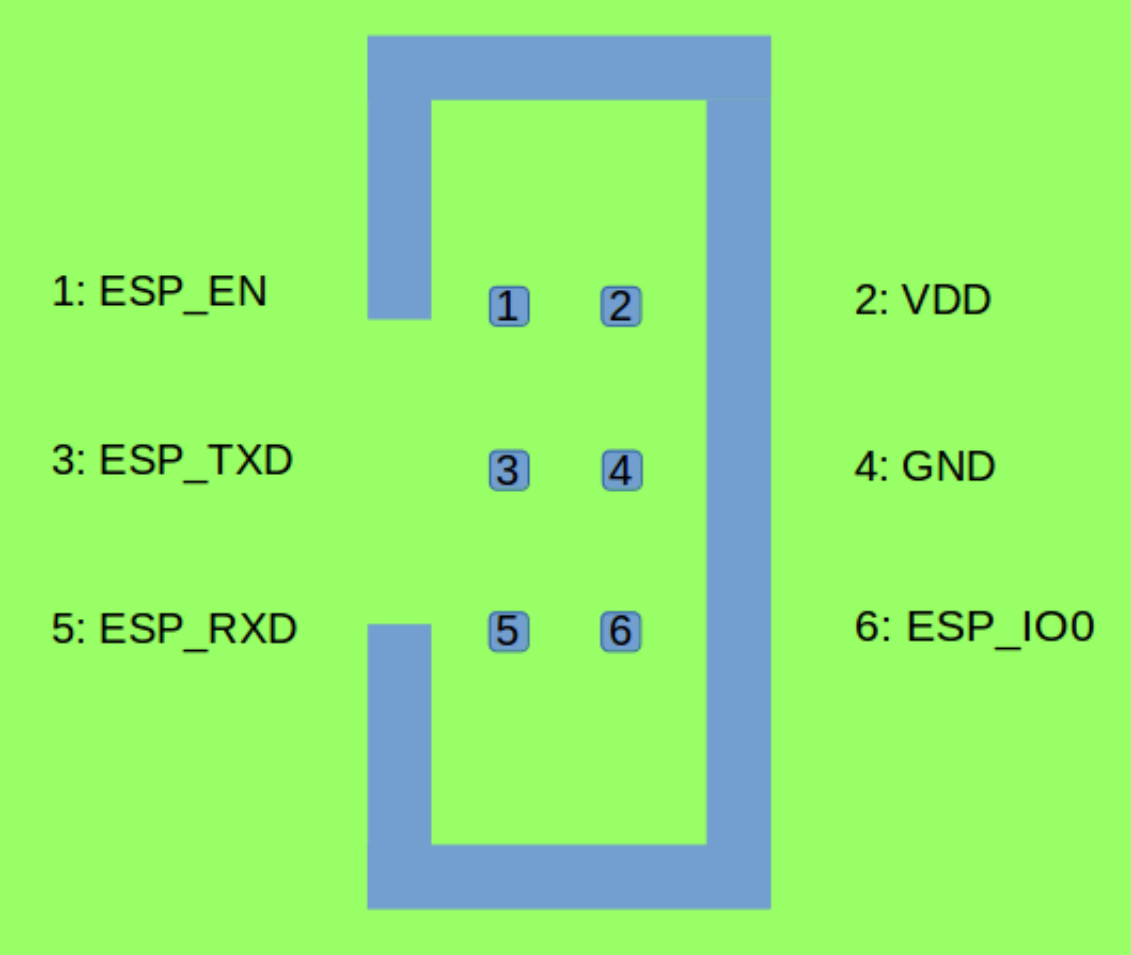

Fig. 5: Program Interface (click to enlarge)

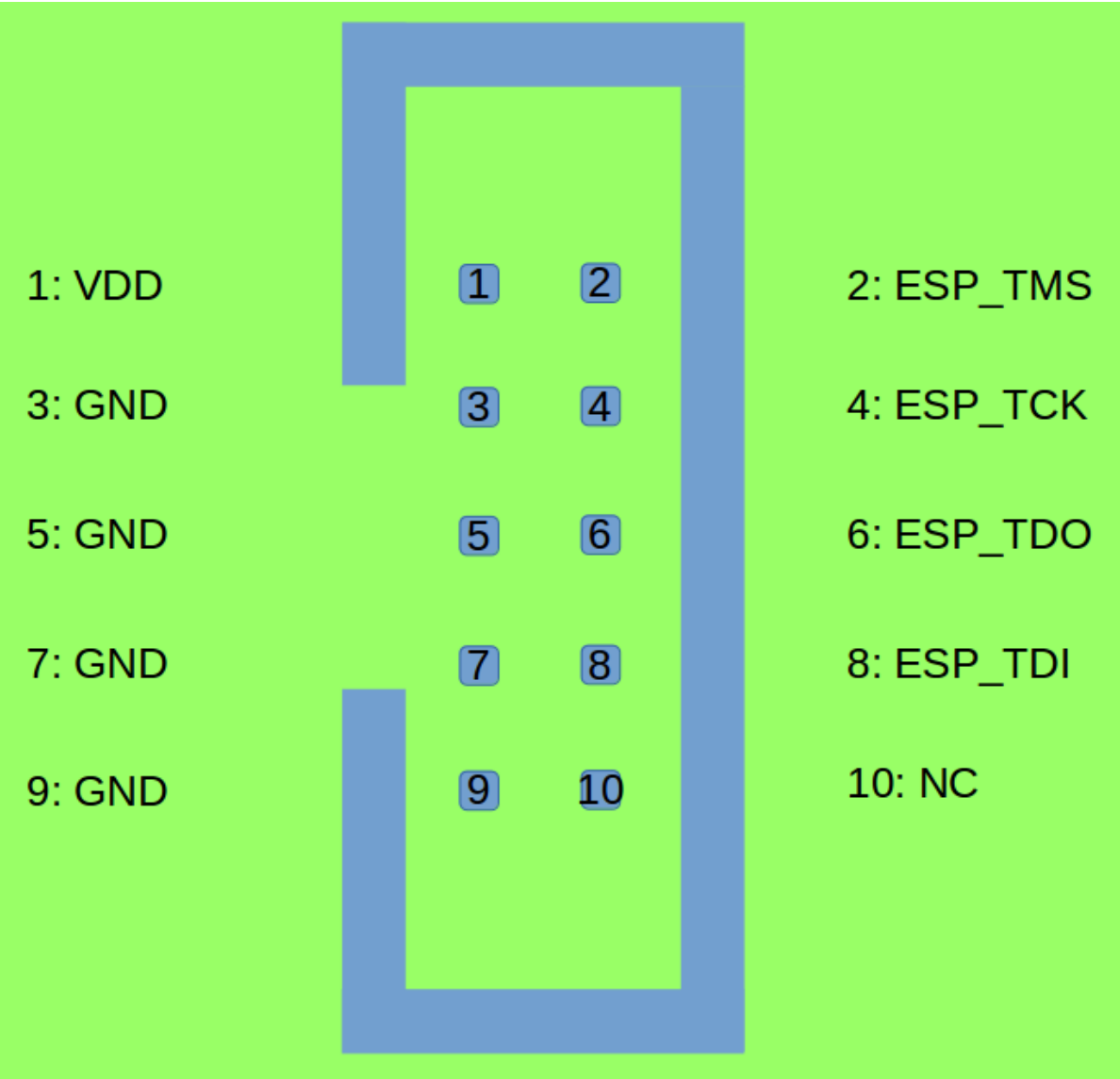

Fig. 6: JTAG Interface (click to enlarge)

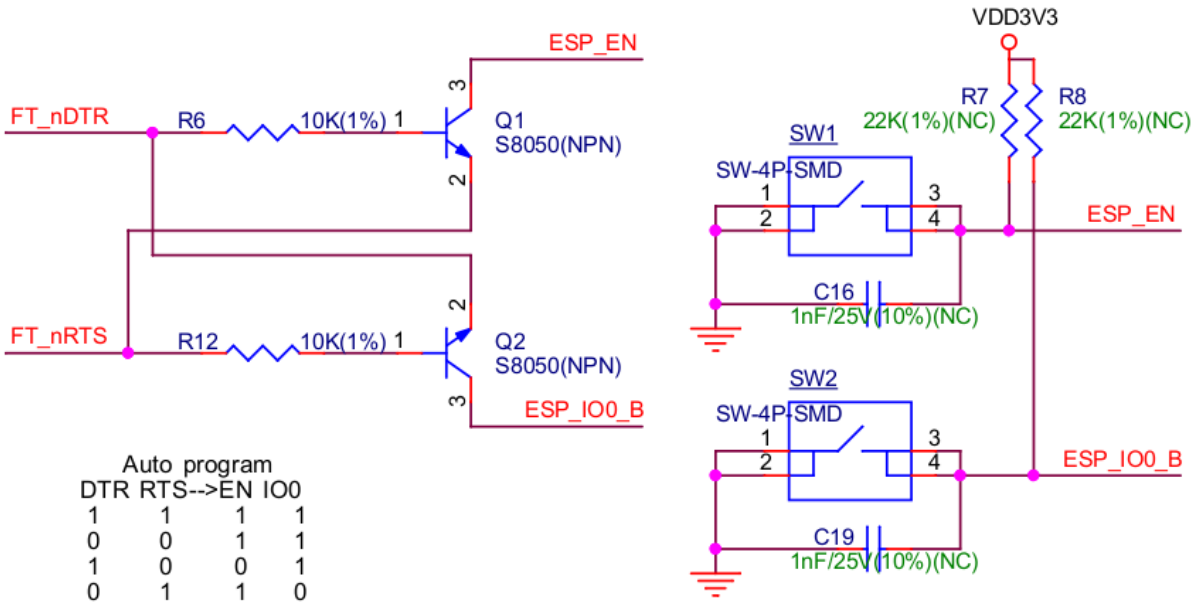

Fig. 7: Automatic Downloading Circuit (click to enlarge)

Delay Circuit

The delay circuit of ESP-Prog includes the bus buffer, inverter, MOSFET, first-order RC circuit, and other components. This delay circuit ensures that the ESP32 chip can power up or reset itself before connecting with the JTAG signal, thus protecting the chip from the influence of JTAG on power-up or reset.

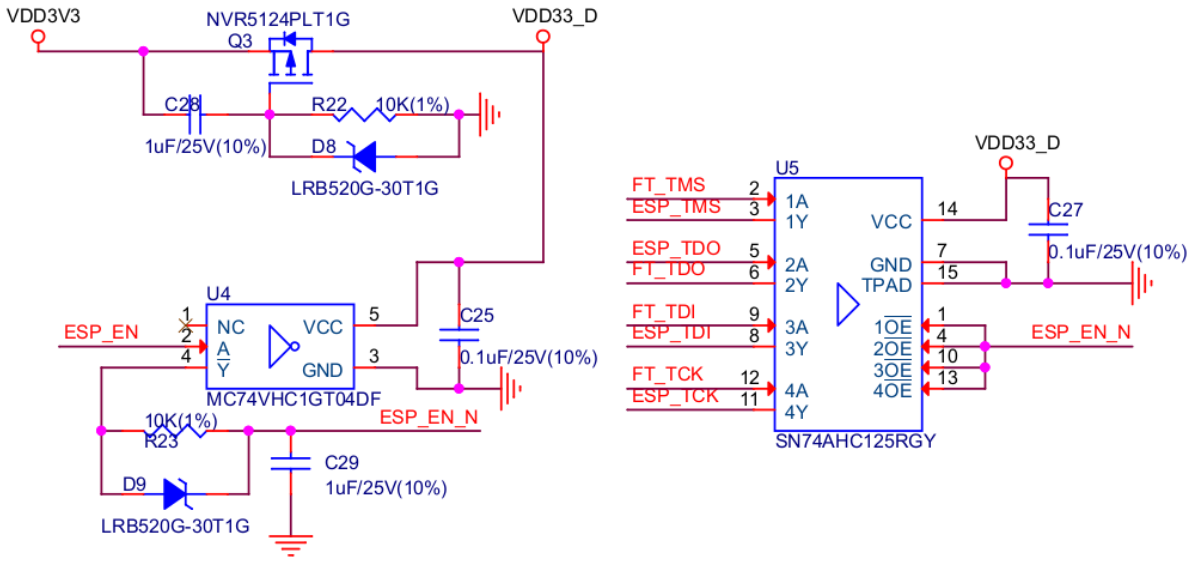

Fig. 8: ESP-Prog Delay Circuit (click to enlarge)

LED Status Indication

- The red LED lights up when the system is connected to the 3.3 V power.
- The green LED lights up when ESP-Prog is downloading data to ESP32.
- The blue LED lights up when ESP-Prog is receiving data from ESP32.

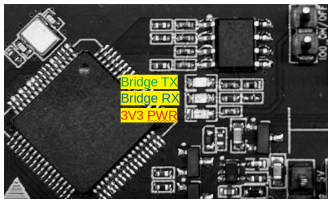

Fig. 9: LED Status (click to enlarge)

Pin Headers

Users can select the power supply for the Program and JTAG interfaces via the Pin Header to Select Power Supply, and select the boot modes of ESP8266 and ESP32 via the IO0 On/Off Pin.

- **Pin Header to Select Power Supply**
  The pin header in the middle is the power input pin for each interface. When this pin is connected to 5 V, the power output of the interface is 5 V. When this pin is connected to 3.3 V, the power output of the interface is 3.3 V.
- **IO0 On/Off Pin**
  Pin IO0 can be set to select ESP8266' s and ESP32' s boot modes. This pin can be used as a common GPIO, after the chip is powered on. By removing a jumper from the pin header, users can disconnect Pin IO0 manually to protect the operation of the user board from the influence of ESP-Prog' s automatic downloading circuit.

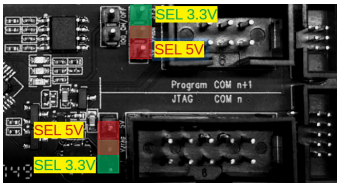

Fig. 10: Pin Headers (click to enlarge)

For further design documentation for the board, please contact us at sales@espressif.com.

Chapter 2

ESP-Prog-2

ESP-Prog-2 is a versatile debugging tool developed by Espressif. It supports automatic firmware downloading, serial communication, and JTAG online debugging, and is compatible with various Espressif chips. With a simple design and flexible power options, ESP-Prog-2 provides reliable power and interface support, making it ideal for developing and debugging Espressif-based applications.

2.1 ESP-Prog-2

This user guide helps you get started with ESP-Prog-2, and provides a detailed introduction to its features and capabilities.

ESP-Prog-2 is a development and debugging tool released by Espressif. It supports function such as automatic firmware downloading, serial communication, and JTAG online debugging. Automatic downloading and serial communication are compatible with ESP8266, ESP32, ESP32-S2, ESP32-S3, and ESP32-C3, while JTAG online debugging is supported on ESP32, ESP32-S2, ESP32-S3, and ESP32-C3.

ESP-Prog-2 is simple in design and easy to use—only one USB cable is needed to connect it to a computer. The computer automatically recognizes two ports, one for downloading and the other for JTAG debugging, based on the port numbers.

Considering that different target boards may operate at different voltages, both ESP-Prog-2 interfaces support either 5 V or 3.3 V power supply voltage. The voltage can be selected via jumper pins, providing compatibility with a variety of boards. However, while the power supply can switch between 3.3 V and 5 V, the RX/TX and JTAG signal levels are fixed at 3.3 V.

The document consists of the following content:

- *Getting started*: Board overview, and hardware/software setup instructions to get started.
- *Hardware Reference*: More detailed information about the board' s hardware.
- *Related Documents*: Links to related documentation.

2.1.1 Getting Started

This section introduces how to set up ESP-Prog-2 hardware for the first time.

Description of Components

The key components of the board are described in clockwise order.

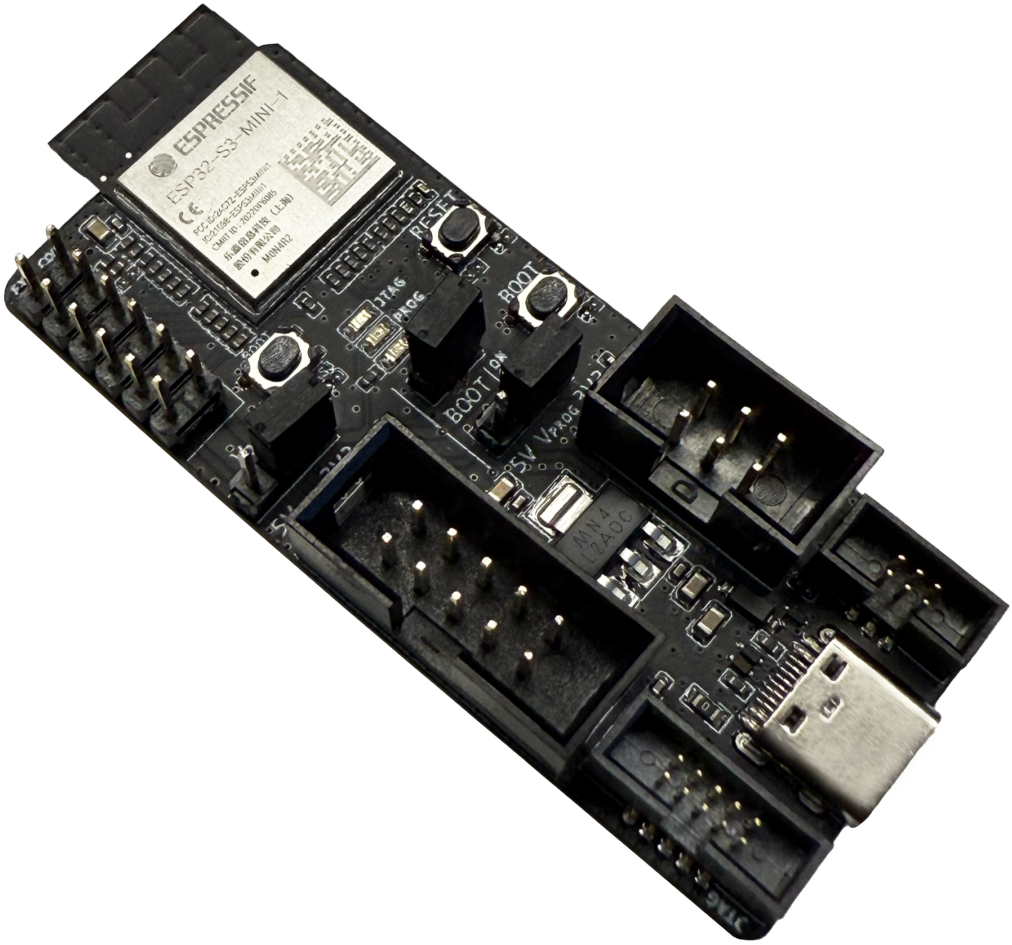

Fig. 1: ESP-Prog-2 (click to enlarge)

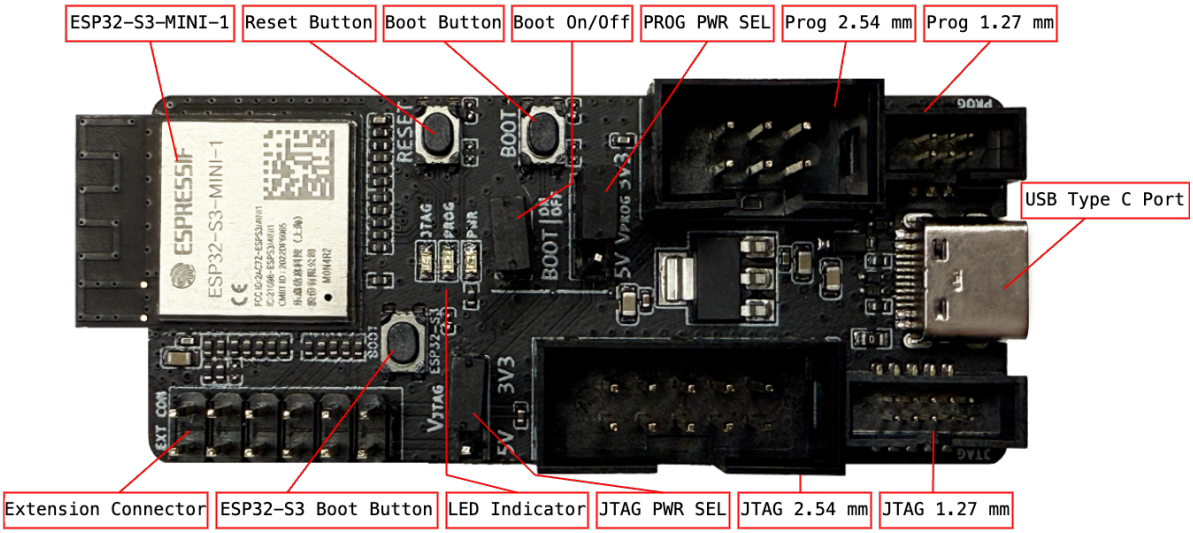

Fig. 2: ESP-Prog-2 - front (click to enlarge)

Table 1: Key Components on ESP-Prog-2

Key Component	Description
ESP32-S3-MINI-1	The ESP32-S3-MINI-1 is a versatile Wi-Fi and Bluetooth Low Energy (BLE) MCU module. It features a variety of peripheral interfaces and comes with a PCB-mounted antenna. The core of the module is the ESP32-S3 chip.
Reset Button	Used to restart the target system being debugged.
Boot Button	Target system download button. Press and hold the **Boot** button, then briefly press the **Reset** button to enter the Firmware Download mode, allowing you to download the firmware to the target system via the serial port for debugging. It can be used as a confirmation button during normal operation.
Boot On/Off	Header pin used to configure the status of the IO0 Strapping pin.
PROG PWR SEL	Header pin used to select the program interface power supply input voltage (3.3 V or 5 V).
PROG 2.54 mm	Program interface with 2.54 mm (0.1”) pin spacing.
PROG 1.27 mm	Program interface with 1.27 mm (0.05”) pin spacing.
USB Type-C Port	The USB Type-C interface on the ESP32-S3 chip supports USB 2.0 Full-Speed mode, with a data transfer rate of up to 12 Mbps (Note that the interface does not support 480 Mbps high-speed transfer mode). This interface can be used as a power supply interface for the board, and supports communication with ESP32-S3 via USB protocol.
JTAG 1.27 mm	JTAG interface with 1.27 mm (0.05”) pin spacing.
JTAG 2.54 mm	JTAG interface with 2.54 mm (0.1”) pin spacing.
JTAG PWR SEL	Header pin used to select the JTAG interface power input voltage (3.3 V or 5 V).
LED indicator	Displays the status of ESP-Prog-2. There are three LED modes: red, green, and blue. The red LED is on when the system’ s 3.3 V power is active; the green LED is on when the automatic firmware downloading and serial communication functions are in use; the blue LED is on when the JTAG online debugging function is active.
ESP32-S3 Boot Button	The ESP32-S3 download button for ESP32-S3 firmware downloading. To enter firmware download mode, power on the ESP-Prog-2 again while pressing the ESP32-S3 Boot button.
Extension Connector	Extension IO connector used to bring out the idle IOs of ESP32-S3. You can customize pins to extend the additional functionality of ESP-Prog-2.

Start Application Development

Before powering on, ensure the board is in good condition.

Required Hardware

- ESP-Prog-2
- USB-A to USB-C conversion cable
- A computer (Windows, Linux, or macOS)
- Dupont wires or the ribbon cable provided by Espressif to connect the development board and ESP-Prog-2

Note: Be sure to use an appropriate USB cable. Some cables can only be used for charging, and cannot be used for data transmission or programming.

Hardware Setup

1. Connect the ESP-Prog-2 board to the PC USB port using a USB cable.
2. Use the PROG PWR SEL or JTAG PWR SEL header pin to select the power supply output voltage for the Program interface or JTAG interface.
3. Use the ribbon cable provided by Espressif to connect the ESP-Prog-2 debugging board to the Espressif target board.
4. Use the Espressif official software tools or scripts to enable automatic downloading and JTAG debugging functions.

Software Setup Please refer to Get Started with ESP-IDF, where section Installation can help you set up the development environment.

Contents and Packaging

Retail Orders Each ESP-Prog-2 board comes in an individual package:

The package contents are as follows:

- Development board
  ESP-Prog-2
- Data cable
  One cable is used for the PROG 2.54 mm interface, connecting the 2x5-PIN header. The other cable is used for the PROG 1.27 mm interface, connecting the 2x3-PIN header.

If you order a few samples, each board comes in an individual package in either antistatic bag or any packaging depending on your retailer.

For retail orders, please go to Get Samples.

Wholesale Orders If you order in bulk, the boards come in large cardboard boxes.

For wholesale orders, please go to Contact Sales.

2.1.2 Hardware Reference

Block Diagram

The block diagram below shows the components of ESP-Prog-2 and their interconnections.

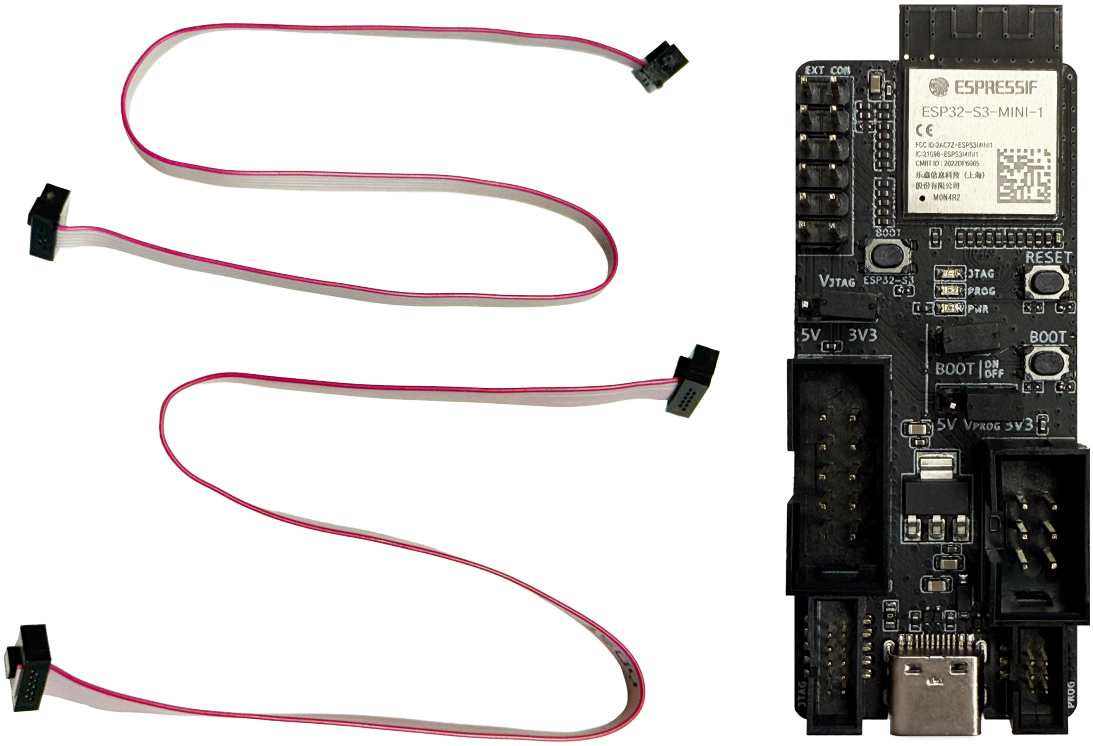

Fig. 3: ESP-Prog-2 Package Contents (click to enlarge)

System Block:

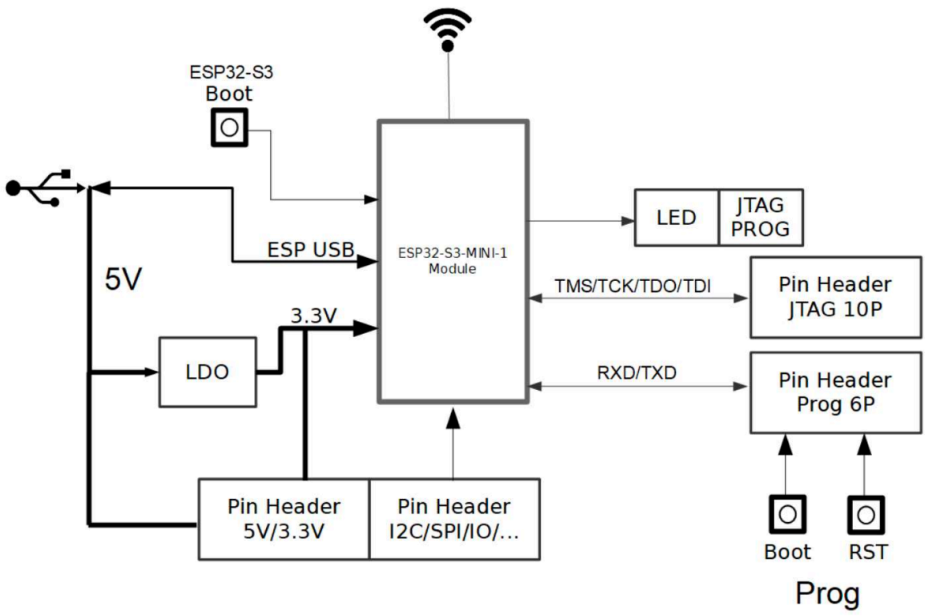

Fig. 4: ESP-Prog-2 Block Diagram (click to enlarge)

Power Supply Options The development board has three incompatible power supply options:

- Default power supply via the ESP-Prog-2 USB port (recommended)
- Power supply via the 5 V and G (GND) pins
- Power supply via the 3.3 V and G (GND) pins

Header Block

The tables below provide the **Name** and **Function** of the pins on both sides of the board (Program Interface and JTAG Interface), and on the expansion connector. The pin names are shown in the front view of the ESP-Prog-2 board. The numbering is the same as in the ESP-Prog-2 Schematic (PDF).

Program Interface

No.	Name	Function
1	ESP_EN	Enable signal
2	VDD	Power supply
3	ESP_TXD	TX pin
4	GND	Ground
5	ESP_RXD	RX pin
6	ESP_IO0	Strapping pin

JTAG Interface

Number	Name	Function
1	VDD	Power supply
2	ESP_TMS	JTAG TMS pin, mode selection
3	GND	Ground
4	ESP_TCK	JTAG TCK pin, clock input
5	GND	Ground
6	ESP_TDO	JTAG TDO pin
7	GND	Ground
8	ESP_TDI	JTAG TDI pin
9	GND	Ground
10	NC	No connection

Extend Connector

Number	Name	Function
1	I2C_SDA/OPTN_IO	Configurable IO
2	I2C_SCL/OPTN_IO	Configurable IO
3	GND	Ground
4	SPI_HD/OPTN_IO	Configurable IO
5	SPI_D/OPTN_IO	Configurable IO
6	SPI_CS/OPTN_IO	Configurable IO
7	GND	Ground
8	SPI_CLK/OPTN_IO	Configurable IO
9	SPI_WD/OPTN_IO	Configurable IO
10	SPI_Q/OPTN_IO	Configurable IO
11	VCC_5V	5 V Power supply
12	VCC_3V3	3V3 Power supply

2.1.3 Related Documents

- ESP-Prog-2 Schematic (PDF)
- ESP-Prog-2 PCB Layout (PDF)
- ESP-Prog-2 Dimensions (PDF)

For further design documentation for the board, please contact us at sales@espressif.com.

2.2 Reference Documentation

2.2.1 Introduction to Functions

The Working Mode of USB Bridge

ESP-Prog-2 establishes a bridge between a computer and a target chip based on ESP32-S3. It can emulate a USB composite device to enable serial data transmission between the computer and the target chip through USB-to-UART bridging, or enable bidirectional JTAG communication between the computer and the target chip through JTAG bridging.

Communication Interface

- **Program Interface**
- **JTAG Interface**
  The design for the JTAG interface on the user board should follow the reference provided in the figure below.
- **Fool-proof Design**
  The ESP-Prog-2 interfaces use boxed header connectors (DC3-6P/DC3-10P) with reverse polarity protection. It is recommended to use connectors of the same type, such as `FTSH-105-01-S-DV-*` or `DC3-*P`.

  Note: Since the ribbon cables have a fixed orientation, each ESP-Prog-2 interface corresponds to a specific cable connection. Using mismatched cables may result in incorrect wiring. Therefore, please use the official ribbon cables.

LED Status Indication

- When the system 3.3 V power supply is on, the red LED lights up.
- When ESP-Prog-2 bridges through USB-to-UART, the green LED lights up.
- When ESP-Prog-2 bridges through JTAG, the blue LED lights up.

Pin Headers

- **Pin Header to Select Power Supply** The labeled pins are the power input pins for each interface. When connected to 5 V, the power output of the interface is 5 V; when connected to 3.3 V, the power output of the interface is 3.3 V.
- **BOOT On/Off Pin** The boot mode selection pin can be used as a normal GPIO after the chip is powered on. In order to prevent ESP-Prog-2 from affecting the normal use of the BOOT pin on your board, you can manually control the BOOT signal.

For further design documentation for the board, please contact sales: sales@espressif.com.

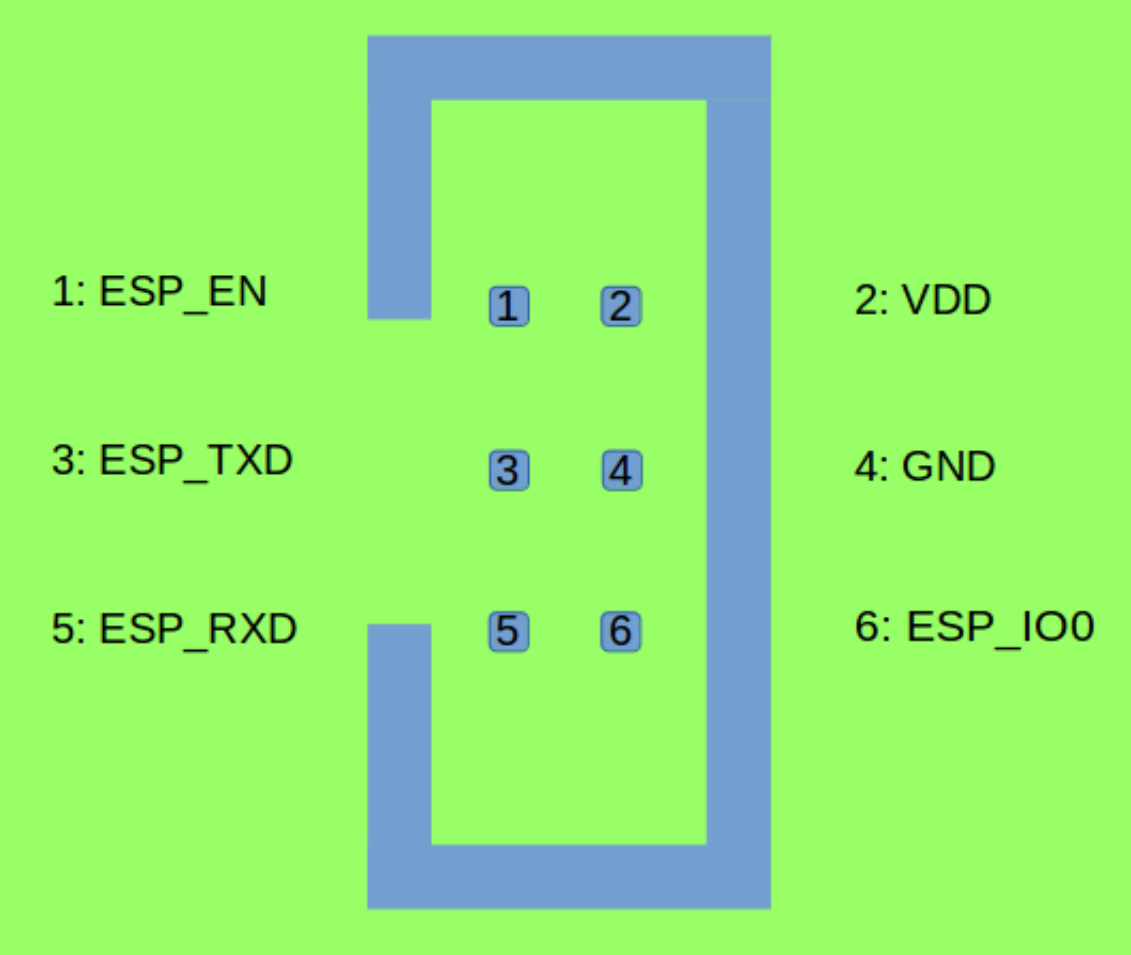

Fig. 5: Program Interface (click to enlarge)

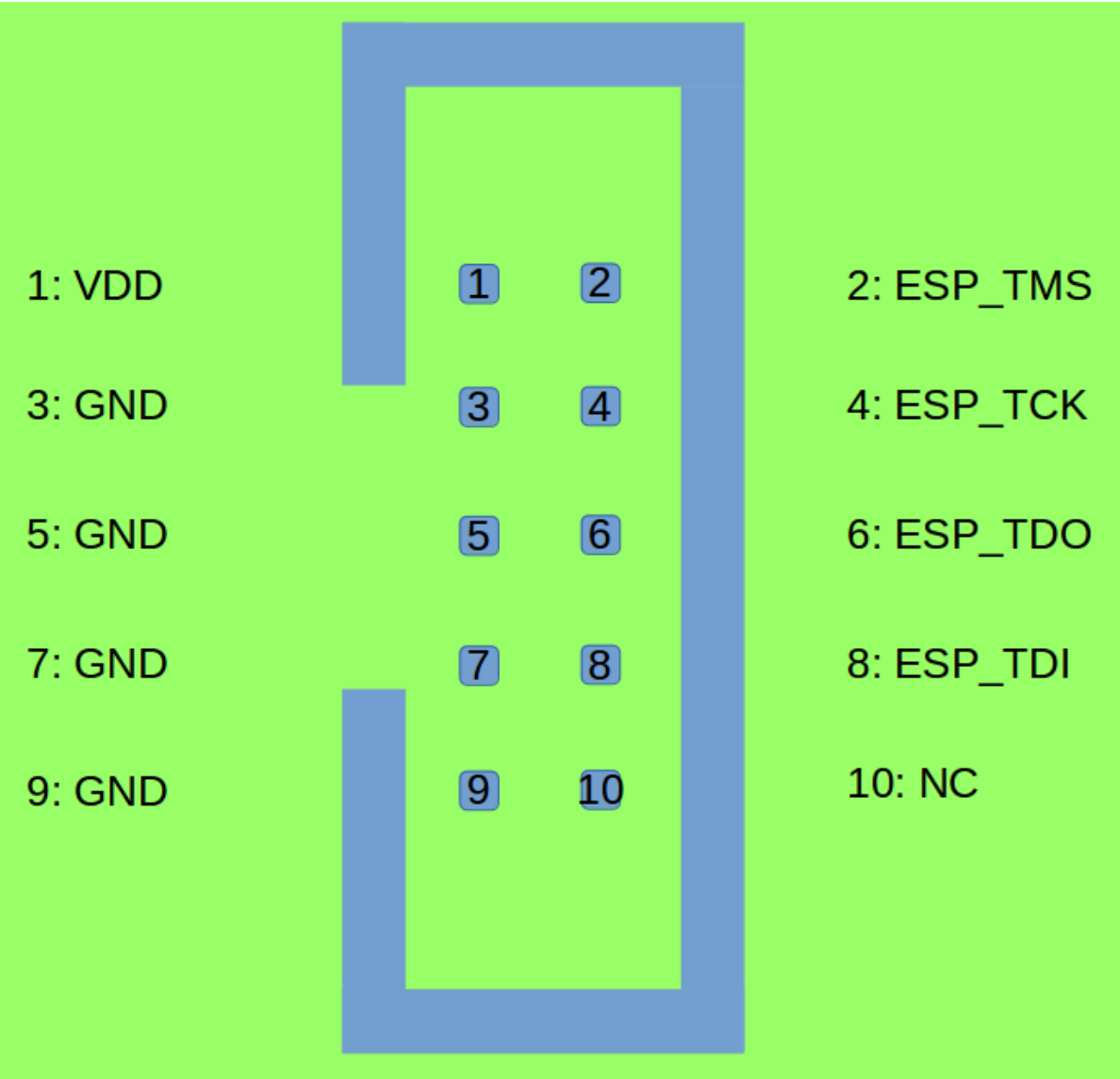

Fig. 6: JTAG Interface (click to enlarge)

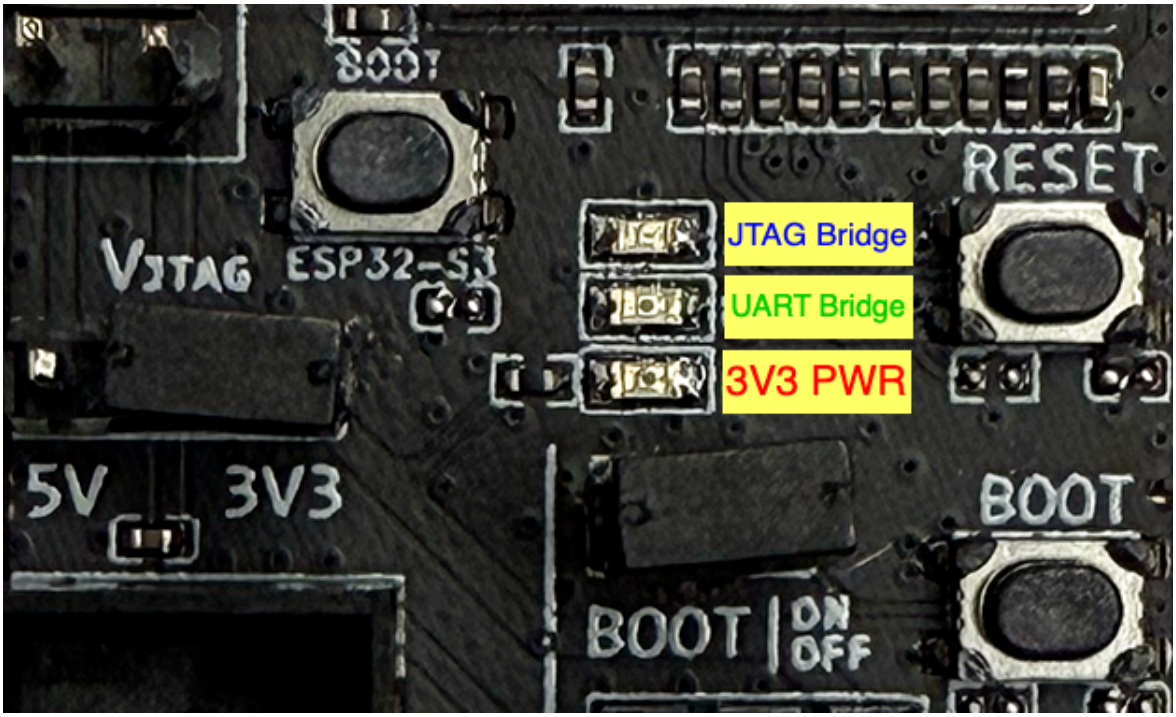

Fig. 7: LED Status (click to enlarge)

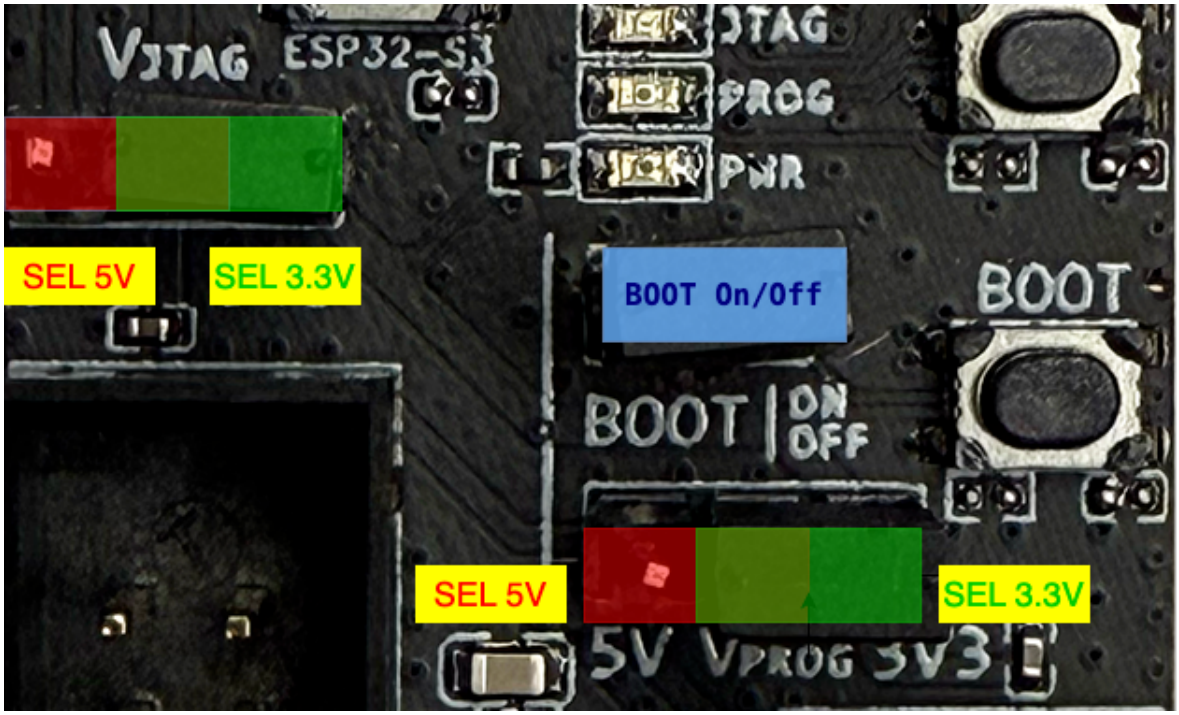

Fig. 8: Pin Headers (click to enlarge)

Chapter 3

ESP-Module-Prog-1(R)

ESP-Module-Prog-1 and ESP-Module-Prog-1R (R stands for WROVER) are two flashing mainboards produced by Espressif. They can be used to flash modules without soldering the module to the power supply and signal lines. The only difference between ESP-Module-Prog-1 and ESP-Module-Prog-1R lies in the layout of the spring pins, which are used to fit different modules.

ESP-Module-Prog-1 supports specific modules for ESP32, ESP32-S2, ESP32-S3, ESP32-C6, while ESP-Module-Prog-1R supports ESP32-WROVER modules. For details about the fitting modules for corresponding mainboard supports, please refer to the *fitting module list*.

3.1 ESP-Module-Prog-1(R)

This user guide will help you get started with ESP-Module-Prog-1(R) and provide in-depth information of this board.

ESP-Module-Prog-1 and ESP-Module-Prog-1R (R stands for WROVER) are two flashing mainboards produced by Espressif. These mainboards allow you to flash modules without the need for soldering to the power supply and signal lines. They can be used as standalone devices or in combination with a subboard. Espressif supports two subboards: ESP-Module-Prog-SUB-02 and ESP-Module-Prog-SUB-01&04, which cannot be used independently and must be used in conjunction with any of the above-mentioned mainboards.

This user guide focuses on **ESP-Module-Prog-1(R) Mainboard**. For detailed information about the subboards, please click the links below and check the corresponding user guides.

- *ESP-Module-Prog-SUB-01&04*
- *ESP-Module-Prog-SUB-02*

This user guide consists of the following sections:

- *Board Overview*: Overview of the board hardware/software.
- *Start Application Development*: How to set up hardware/software to develop applications.
- *Hardware Reference*: More detailed information about the board' s hardware.
- *Sample Request*: How to get a sample board.
- *Related Documents*: Links to related documentation.

3.1.1 Board Overview

ESP-Module-Prog-1(R) is an Espressif flashing mainboard designed specifically for modules. With a module mounted, it can also be used as a mini development board like ESP32-DevKitC. The only difference between ESP-Module-Prog-1 and ESP-Module-Prog-1R lies in the layout of the spring pins, which are used to fit different modules.

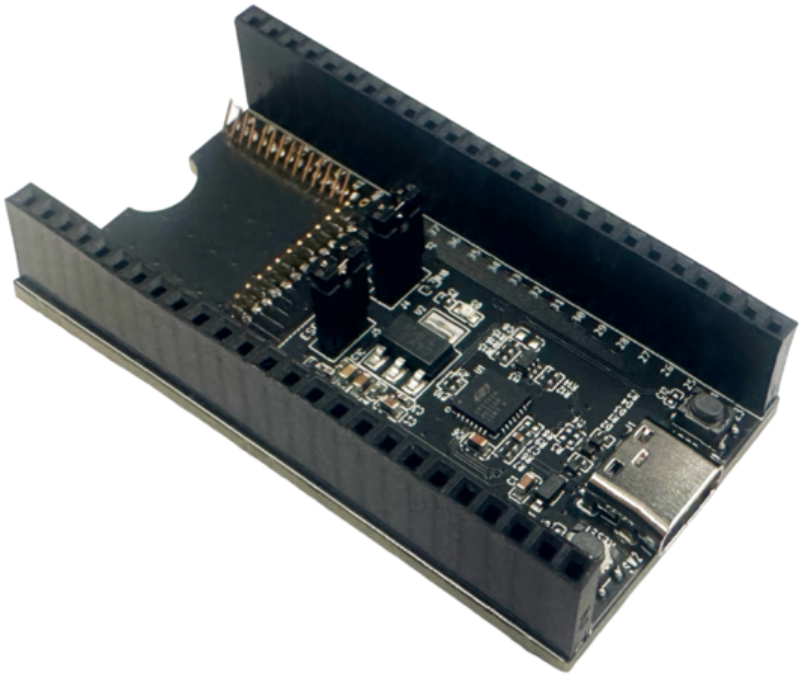

Fig. 1: ESP-Module-Prog-1

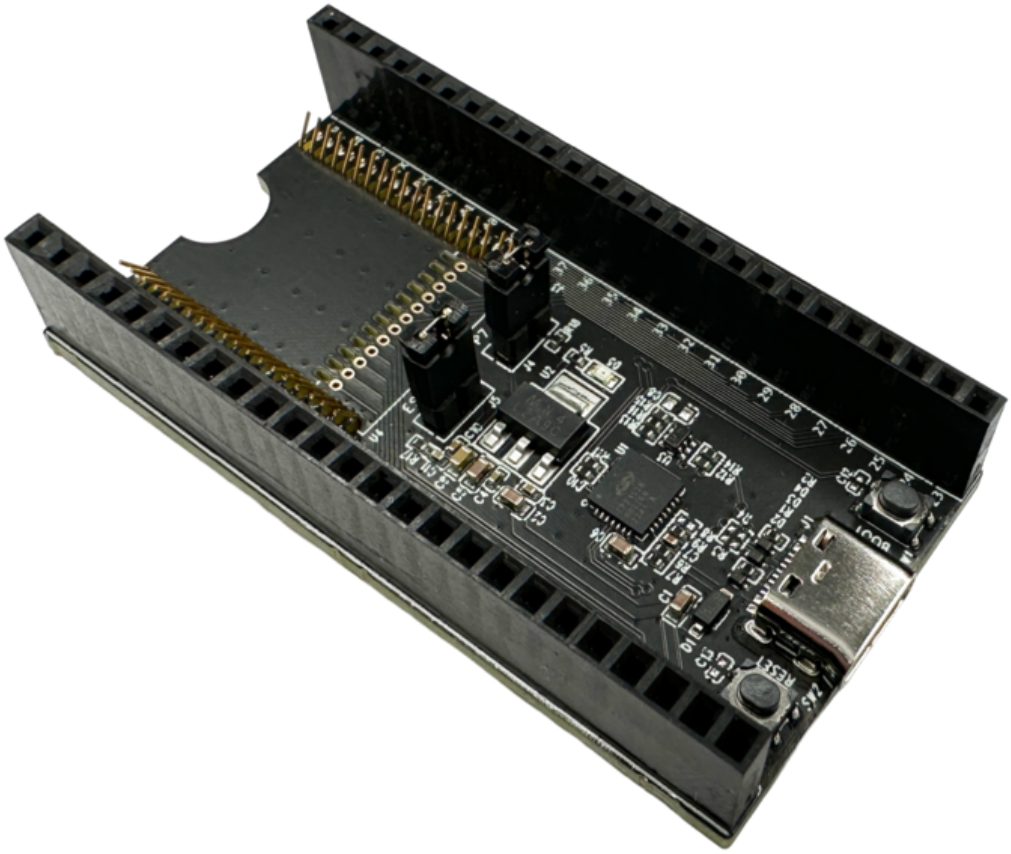

Fig. 2: ESP-Module-Prog-1R

Mainboard	Fitting Module
ESP-Module-Prog-1	• ESP32-WROOM-32 • ESP32-WROOM-32D • ESP32-WROOM-32U • ESP32-SOLO-1 • ESP32-WROOM-32E • ESP32-WROOM-32UE • ESP32-S2-SOLO • ESP32-S2-SOLO-U • ESP32-S2-SOLO-2 • ESP32-S2-SOLO-2U • ESP32-S3-WROOM-1 • ESP32-S3-WROOM-1U • ESP32-S3-WROOM-2 • ESP32-C6-WROOM-1 • ESP32-C6-WROOM-1U
ESP-Module-Prog-1R:	• ESP32-WROVER-B • ESP32-WROVER-IB • ESP32-WROVER-E • ESP32-WROVER-IE

For information about the above modules, please refer to Espressif Series Modules.

Description of Components

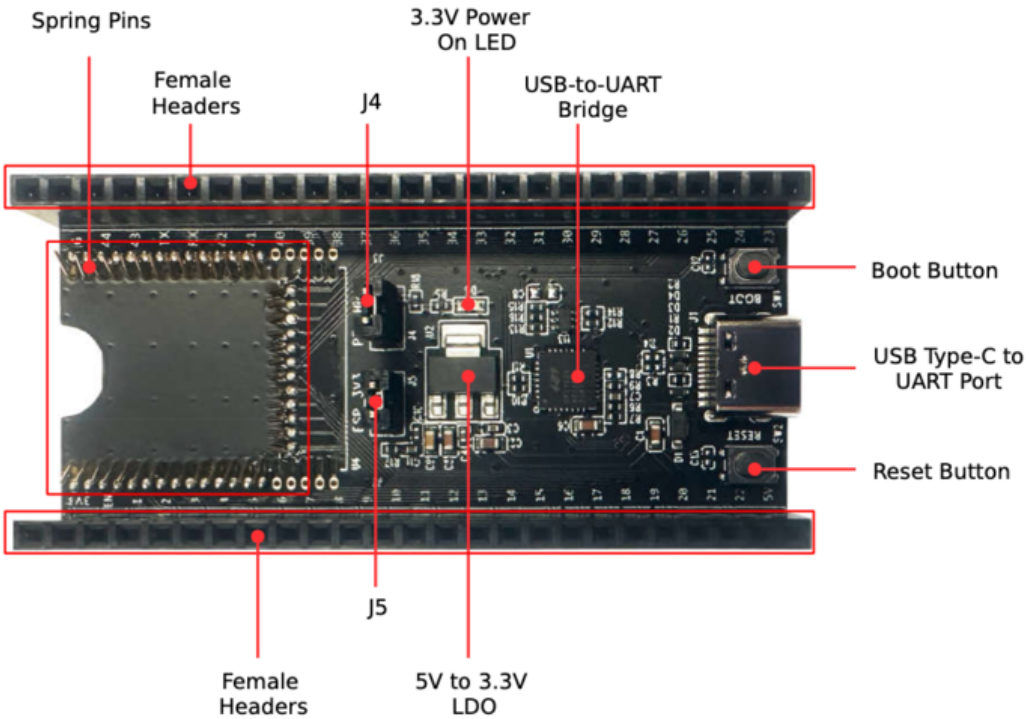

Fig. 3: ESP-Module-Prog-1 - Front

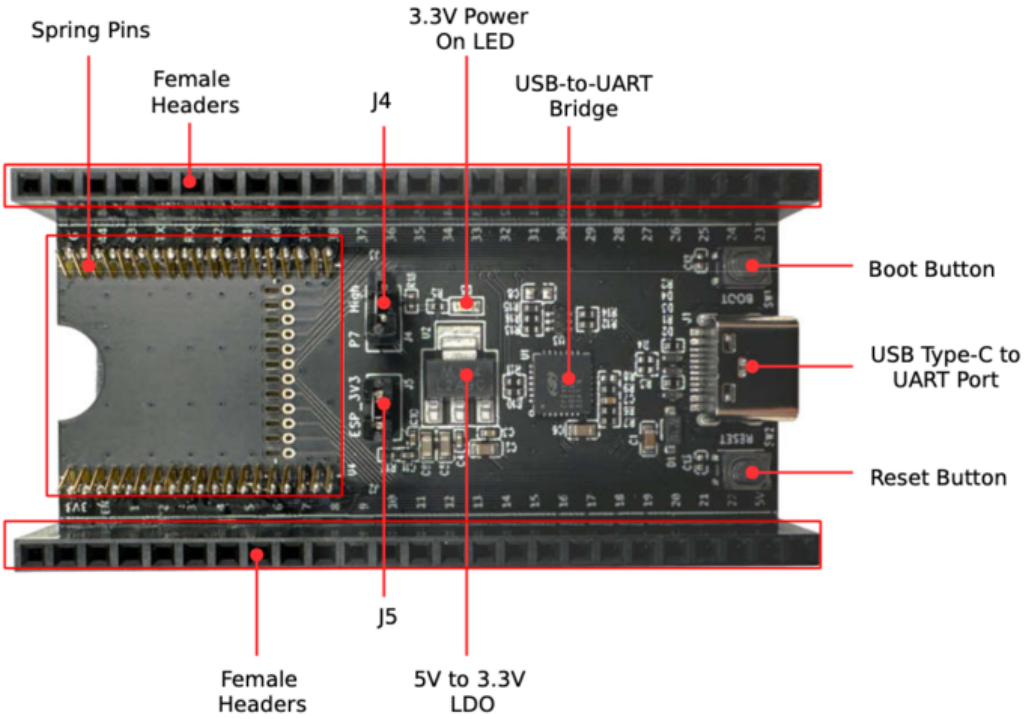

Fig. 4: ESP-Module-Prog-1R - Front

The key components of the board are described in a clockwise direction.

Key Component	Description
Spring Pins	Pins that fit into the module' s castellated holes for attaching and securing the module.
Female Headers	2.54 mm female headers that are connected to the pins of the module mounted in this board. For detailed information, please refer to Section *Pin Descriptions*.
J4	Configures the strapping pin. For details, please refer to Section *Strapping Pin Configuration*.
3.3 V Power On LED	Lights up when the board is powered on with USB or power supply.
USB-to-UART Bridge	Single-chip USB to UART bridge that provides transfer rates of up to 3 Mbps.
Boot Button	Download button. Holding down **Boot** and then pressing **EN** initiates Firmware Download mode for downloading firmware through the serial port.
USB Type-C to UART Interface	Serves either as a power supply interface for the development board or as a communication interface to the chip via an on-board USB to UART bridge.
Reset Button	Reset button.
5V-to-3.3V LDO	Low Dropout Regulator (LDO).
J5	Measures the current. For details, please refer to Section *Measuring Current*.

3.1.2 Start Application Development

Before powering up your ESP-Module-Prog-1(R), please make sure that it is in good condition with no obvious signs of damage.

Required Hardware

- Any one of the above-mentioned Espressif modules

- USB-A to USB-C cable
- PC (Windows, Linux, or macOS)

Note: Please make sure to use the appropriate USB cable. Some cables can only be used for charging, not for data transfer or program flashing.

Hardware Setup

Mount the module to ESP-Module-Prog-1(R) as follows:

1. Place the module lightly on ESP-Module-Prog-1(R), making sure the castellated holes on the module are aligned with the spring pins on the board.
2. Press the module inward until you hear a "click", which indicates that the module has been successfully mounted.
3. Check if all the spring pins are clicked into the castellated holes. If there is a misalignment, you can use tweezers to poke the spring pins into the castellated holes.

Now the board is ready for software setup.

Software Setup

Recommended Approach It is recommended to use the ESP-IDF development framework to flash the binary file (*.bin) to ESP-Module-Prog-1(R). Please refer to ESP-IDF Get Started to get a quick overview of setting up your development environment and flashing applications.

Alternative Approach For Windows systems, you can also use the Flash Download Tool to flash the binary files.

Note:

1. To flash binary files, the chip should be set to Firmware Download mode. This can be done either by the flash tool automatically, or by holding down the Boot button and tapping the Reset button.
2. After flashing binary files, the Flash Download Tool restarts your module and boots the flashed application by default.

3.1.3 Hardware Reference

This section provides more detailed information about the board's hardware.

Block Diagram

The block diagram below shows the components of ESP-Module-Prog-1(R) and their interconnections.

Power Source Select

There are three mutually exclusive ways to provide power to the board:

- USB Type-C to UART port (default and recommended)
- 5V and GND header pins
- 3V3 and GND header pins

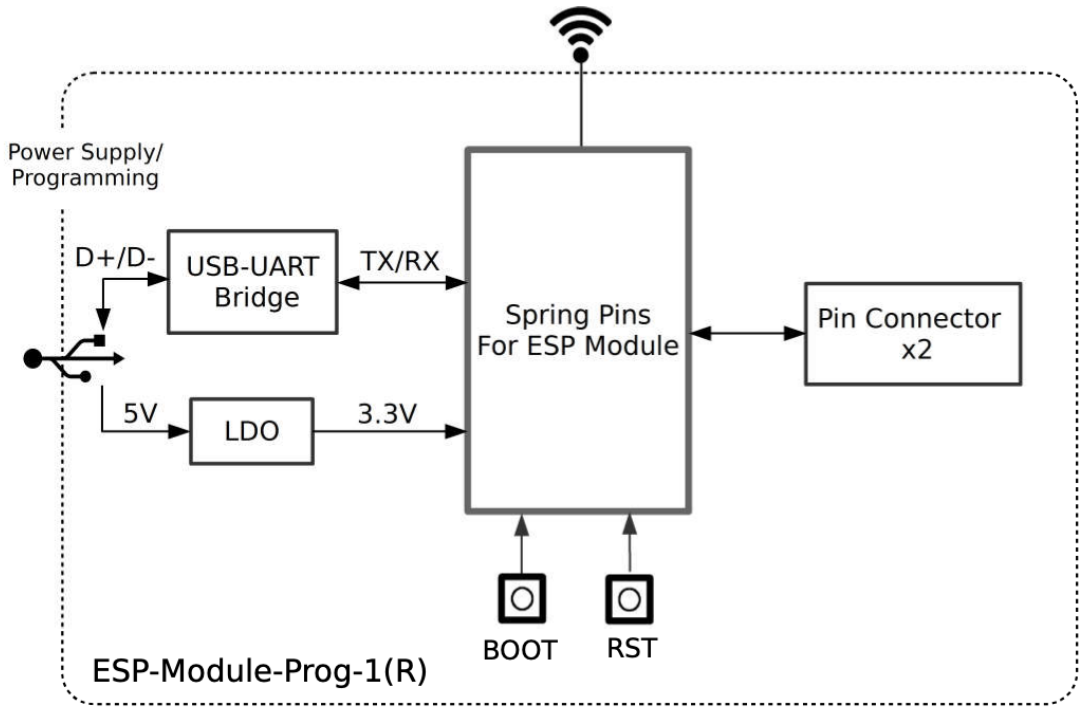

Fig. 5: ESP-Module-Prog-1(R)

Strapping Pin Configuration

J4 on ESP-Module-Prog-1(R) is a 2-Pin header, with one end being P7 and one end being High (i.e. pull-up):

- For some modules, the corresponding pin of P7 is not a strapping pin and no pull-up is needed for downloading. In this case, a jump cap is not required for J4.
- For some modules, the corresponding pin of P7 is a strapping pin and a pull-up is needed for downloading. In this case, a jump cap is required for J4.

Note: For the corresponding pin of P7 on Espressif modules, please refer to ESP-Module-Prog-1(R) GPIO Map.

Measuring Current

J5 on ESP-Module-Prog-1(R) can be used to measure the current of the module.

- Remove the J5 jumper cap: At this time, the peripherals and modules on the board are disconnected from the power supply, and the module current can be measured after the J5 pin is connected to the ammeter.
- Install the J5 jump cap (factory default): the board functions normally.

Note: When using the 3V3 and GND header pins to power up the board, you need to remove the J5 jumper cap and connect an ammeter in series with the external circuit to measure the current of the module.

Pin Descriptions

The two tables below provide the **Name** and **Signal** of female headers on both sides of the board (J2 and J3). The pin names are shown in Figure *ESP-Module-Prog-1 - Front*. The numbering is the same as in the ESP-Module-Prog-1(R) Schematics (PDF). For the corresponding pin of each signal on Espressif modules, please refer to ESP-Module-Prog-1(R) GPIO Map.

J2

No.	Name	Signal
1	3V3	3.3 V power supply
2	EN	CHIP_EN (High: enables the chip; Low: disables the chip. Pulled up by default.)
3	1	P1
4	2	P2
5	3	P3
6	4	P4
7	5	P5
8	6	P6
9	7	P7
10	8	P8
11	9	P9
12	10	P10
13	11	P11
14	12	P12
15	13	P13
16	14	P14
17	15	P15
18	16	P16
19	17	P17
20	18	P18
21	19	P19
22	20	P20
23	21	P21
24	22	P22
25	5V	5 V power supply

J3

No.	Name	Signal
1	G	Ground
2	44	P44
3	43	P43
4	TX	TXD0
5	RX	RXD0
6	42	P42
7	41	P41
8	40	P40
9	39	P39
10	38	P38
11	37	P37
12	36	P36
13	35	P35
14	34	P34
15	33	P33
16	32	P32
17	31	P31
18	30	P30
19	29	P29
20	28	P28
21	27	P27
22	26	P26
23	25	P25
24	24	P24
25	23	P23

3.1.4 Sample Request

Retail Orders

If you order a few samples, each ESP-Module-Prog-1(R) comes in an individual package in either antistatic bag or any packaging depending on your retailer.

For retail orders, please go to https://www.espressif.com/en/company/contact/buy-a-sample.

Wholesale Orders

If you order in bulk, the boards come in large cardboard boxes.

For wholesale orders, please go to https://www.espressif.com/en/contact-us/sales-questions.

3.1.5 Related Documents

- ESP-Module-Prog-1(R) GPIO Map (XLS)
- ESP-Module-Prog-1(R) Schematics (PDF)
- ESP-Module-Prog-1(R) PCB Layout (PDF)
- ESP-Module-Prog-1(R) Dimensions (PDF)
- ESP-Module-Prog-1(R) Dimensions source file (DXF) - You can view it with Autodesk Viewer online
- Espressif Modules Datasheet
- Espressif Product Selector

Chapter 4

ESP-Module-Prog-SUB-02

ESP-Module-Prog-SUB-02 is an Espressif flashing subboard designed specifically for modules. It can be used to flash modules without soldering the module to the power supply and signal lines.

Note: As a subboard, ESP-Module-Prog-SUB-02 cannot be used alone, but must be used together with the ESP-Module-Prog-1 or ESP-Module-Prog-1R mainboard.

For detailed information about the mainboards, please refer to *ESP-Module-Prog-1(R)*.

ESP-Module-Prog-SUB-02 supports specific modules for the ESP-WROOM, ESP32-C3-WROOM, ESP8684-WROOM, and ESP32-H2-WROOM series. For details about the fitting modules, please refer to the *fitting module list*.

4.1 ESP-Module-Prog-SUB-02

This user guide will help you get started with ESP-Module-Prog-SUB-02 and will also provide more in-depth information. For detailed information about the mainboard and the other subboard, please click the links below and check the corresponding user guides.

- *ESP-Module-Prog-1(R)*
- *ESP-Module-Prog-SUB-01&04*

This user guide consists of the following sections:

- *Board Overview*: Overview of the board hardware/software.
- *Start Application Development*: How to set up hardware/software to develop applications.
- *Hardware Reference*: More detailed information about the board' s hardware.
- *Sample Request*: How to get a sample board.
- *Related Documents*: Links to related documentation.

4.1.1 Board Overview

ESP-Module-Prog-SUB-02 is an Espressif flashing subboard designed specifically for modules. It can be used to flash modules without soldering the module to the power supply and signal lines. With a module mounted, ESP-Module-Prog-SUB-02 can also be used as a mini development board like ESP32-DevKitC. Note that as a subboard, ESP-Module-Prog-SUB-02 cannot be used alone, but must be used together with the ESP-Module-Prog-1 or ESP-Module-Prog-1R mainboard.

- **ESP-Module-Prog-SUB-02 fits the following Espressif modules:**

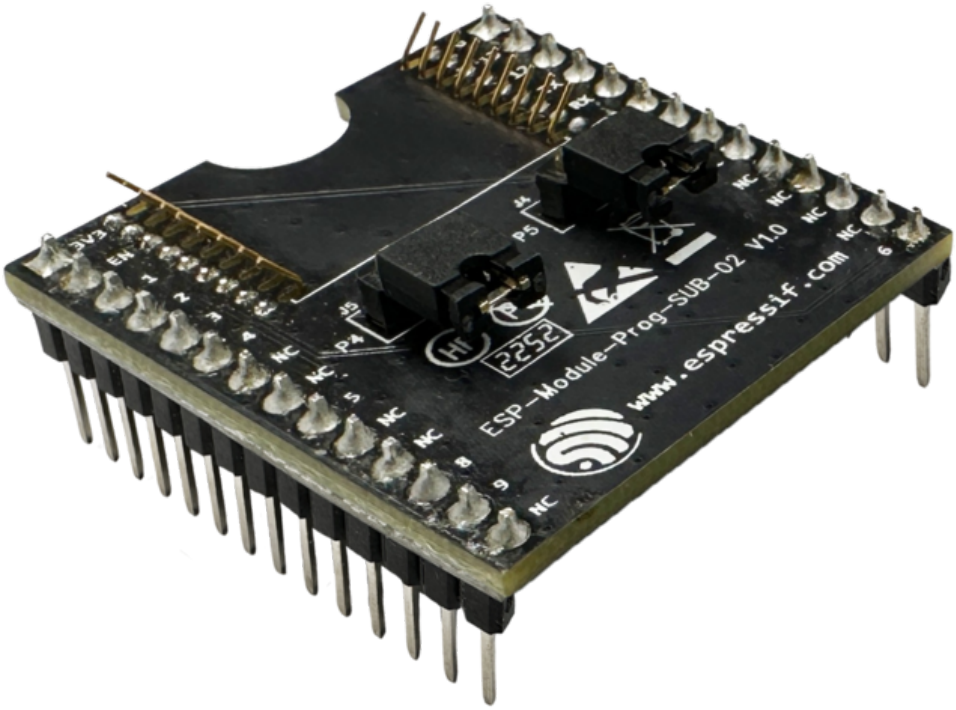

Fig. 1: ESP-Module-Prog-SUB-02

- ESP-WROOM-02
- ESP-WROOM-02D
- ESP-WROOM-02U
- ESP32-C3-WROOM-02
- ESP32-C3-WROOM-02U
- ESP8684-WROOM-02C
- ESP8684-WROOM-02UC
- ESP32-H2-WROOM-02C

For information about the above modules, please refer to Espressif Series Modules.

Description of Components

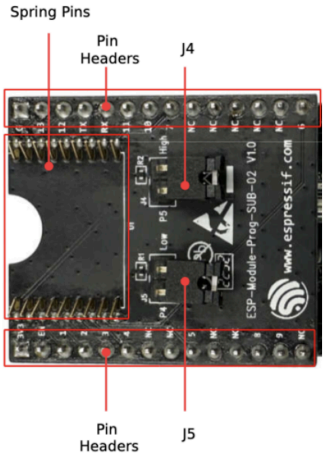

Fig. 2: ESP-Module-Prog-SUB-02 - Front

The key components of the board are described in a clockwise direction.

Key Component	Description
Spring Pins	Pins that fit into the module' s castellated holes for attaching and securing the module.
Pin Headers	2.54 mm pin headers that are connected to the pins of the module mounted in this board and to the mainboard. For detailed information, please refer to Section *Pin Descriptions*.
J4	Configures the strapping pin. For details, please refer to Section *Strapping Pin Configuration*.
ESP-Module-Prog-1(R)	ESP-Module-Prog-1 and ESP-Module-Prog-1R (R stands for WROVER) are two flashing mainboards produced by Espressif. For detailed information about the mainboard, please refer to *ESP-Module-Prog-1(R)*.
J5	Configures the strapping pin. For details, please refer to Section *Strapping Pin Configuration*.

4.1.2 Start Application Development

Before powering up your ESP-Module-Prog-SUB-02, please make sure that it is in good condition with no obvious signs of damage.

Required Hardware

- Any one of the above-mentioned Espressif modules

- USB-A to USB-C cable
- PC (Windows, Linux, or macOS)
- ESP-Module-Prog-1 or ESP-Module-Prog-1R mainboard

Note: Please make sure to use the appropriate USB cable. Some cables can only be used for charging, not for data transfer or program flashing.

Hardware Setup

Mount the module to the ESP-Module-Prog-SUB-02 subboard as follows:

1. Place the module lightly on ESP-Module-Prog-SUB-02, making sure the castellated holes on the module are aligned with the spring pins on the board.
2. Press the module inward until you hear a "click", which indicates that the module has been successfully mounted.
3. Check if all the spring pins are clicked into the castellated holes. If there is a misalignment, you can use tweezers to poke the spring pins into the castellated holes.
4. Mount the subboard to the mainboard.

Now the board is ready for software setup.

Software Setup

Recommended Approach It is recommended to use the ESP-IDF development framework to flash the binary file (*.bin) to ESP-Module-Prog-SUB-01&04. Please refer to ESP-IDF Get Started to get a quick overview of setting up your development environment and flashing applications.

Alternative Approach For Windows systems, you can also use the Flash Download Tool to flash the binary files.

Note:

1. To flash binary files, the chip should be set to Firmware Download mode. This can be done either by the flash tool automatically, or by holding down the Boot button and tapping the Reset button.
2. After flashing binary files, the Flash Download Tool restarts your module and boots the flashed application by default.

4.1.3 Hardware Reference

This section provides more detailed information about the board's hardware.

Block Diagram

The block diagram below shows the components of ESP-Module-Prog-SUB-02 and their interconnections.

Strapping Pin Configuration

J4 on ESP-Module-Prog-SUB-02 is a 2-Pin header, with one end being P5 and one end being High (i.e. pull-up):

- For some modules, the corresponding pin of P5 is not a strapping pin and no pull-up is needed for downloading. In this case, a jump cap is not required for J4.
- For some modules, the corresponding pin of P5 is a strapping pin and a pull-up is needed for downloading. In this case, a jump cap is required for J4.

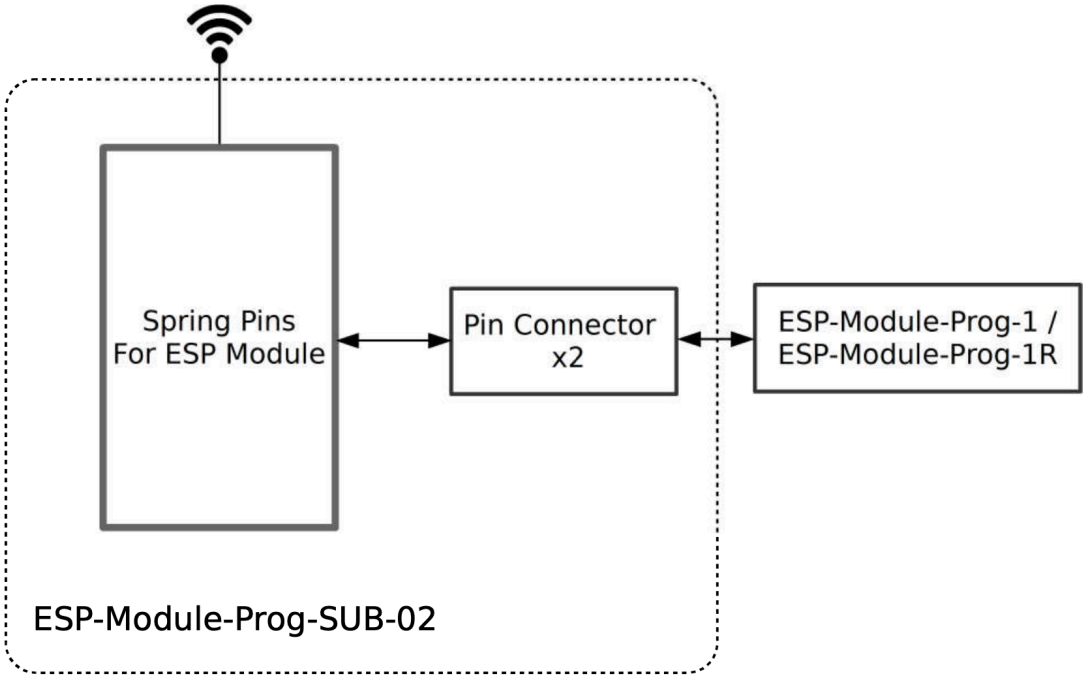

Fig. 3: ESP-Module-Prog-SUB-02

J5 on ESP-Module-Prog-SUB-02 is a 2-Pin header, with one end being P4 and one end being Low (i.e. pull-down):

- For some modules, the corresponding pin of P4 is not a strapping pin and no pull-up is needed for downloading. In this case, a jump cap is not required for J5.
- For some modules, the corresponding pin of P4 is a strapping pin and a pull-up is needed for downloading. In this case, a jump cap is required for J5.

Note: For the corresponding pin of P4 and P5 on Espressif modules, please refer to ESP-Module-Prog-SUB-02 GPIO Map。

Pin Descriptions

The two tables below provide the **Name** and **Signal** of pin headers on both sides of the board (J2 and J3). The pin names are shown in Figure *ESP-Module-Prog-SUB-02 - Front*. The numbering is the same as in the ESP-Module-Prog-SUB-02 Schematics (PDF). For the corresponding pin of each signal on Espressif modules, please refer to ESP-Module-Prog-SUB-02 GPIO Map.

J2

No.	Name	Signal
1	3V3	3.3 V power supply
2	EN	CHIP_EN (High: enables the chip; Low: disables the chip. Pulled up by default.)
3	1	P1
4	2	P2
5	3	P3
6	4	P4
7	NC	No connection
8	NC	No connection
9	5	P5
10	NC	No connection
11	NC	No connection
12	8	P8
13	9	P9
14	NC	No connection

J3

No.	Name	Signal
1	G	Ground
2	13	P13
3	12	P12
4	TX	TXD0
5	RX	RXD0
6	11	P11
7	10	P10
8	7	P7
9	NC	No connection
10	NC	No connection
11	NC	No connection
12	NC	No connection
13	NC	No connection
14	6	P6

4.1.4 Sample Request

Retail Orders

If you order a few samples, each ESP-Module-Prog-SUB-02 comes in an individual package in either antistatic bag or any packaging depending on your retailer.

For retail orders, please go to https://www.espressif.com/en/company/contact/buy-a-sample.

Wholesale Orders

If you order in bulk, the boards come in large cardboard boxes.

For wholesale orders, please go to https://www.espressif.com/en/contact-us/sales-questions.

4.1.5 Related Documents

- ESP-Module-Prog-SUB-02 GPIO Map (XLS)
- ESP-Module-Prog-SUB-02 Schematics (PDF)
- ESP-Module-Prog-SUB-02 PCB Layout (PDF)
- ESP-Module-Prog-SUB-02 Dimensions (PDF)

- ESP-Module-Prog-SUB-02 Dimensions source file (DXF) - You can view it with Autodesk Viewer online
- Espressif Modules Datasheet
- Espressif Product Selector

Chapter 5

ESP-Module-Prog-SUB-01&04

ESP-Module-Prog-SUB-01&04 is an Espressif flashing subboard designed specifically for modules. It can be used to flash modules without soldering the module to the power supply and signal lines.

Note: As a subboard, ESP-Module-Prog-SUB-01&04 cannot be used alone, but must be used together with the ESP-Module-Prog-1 or ESP-Module-Prog-1R mainboard.

For detailed information about the mainboards, please refer to *ESP-Module-Prog-1(R)*.

ESP-Module-Prog-SUB-01&04 supports specific modules for the ESP8684-WROOM and ESP8685-WROOM series. For details about the fitting modules, please refer to the *fitting module list*.

5.1 ESP-Module-Prog-SUB-01&04

This user guide will help you get started with ESP-Module-Prog-SUB-01&04 and will also provide more in-depth information. For detailed information about the mainboard and the other subboard, please click the links below and check the corresponding user guides.

- *ESP-Module-Prog-1(R)*
- *ESP-Module-Prog-SUB-02*

This user guide consists of the following sections:

- *Board Overview*: Overview of the board hardware/software.
- *Start Application Development*: How to set up hardware/software to develop applications.
- *Hardware Reference*: More detailed information about the board' s hardware.
- *Sample Request*: How to get a sample board.
- *Related Documents*: Links to related documentation.

5.1.1 Board Overview

ESP-Module-Prog-SUB-01&04 is an Espressif flashing subboard designed specifically for modules. It can be used to flash modules without soldering the module to the power supply and signal lines. With a module mounted, ESP-Module-Prog-SUB-01&04 can also be used as a mini development board like ESP32-DevKitC. Note that as a subboard, ESP-Module-Prog-SUB-01&04 cannot be used alone, but must be used together with the ESP-Module-Prog-1 or ESP-Module-Prog-1R mainboard.

- **ESP-Module-Prog-SUB-01&04 fits the following Espressif modules:**
  - ESP8685-WROOM-01

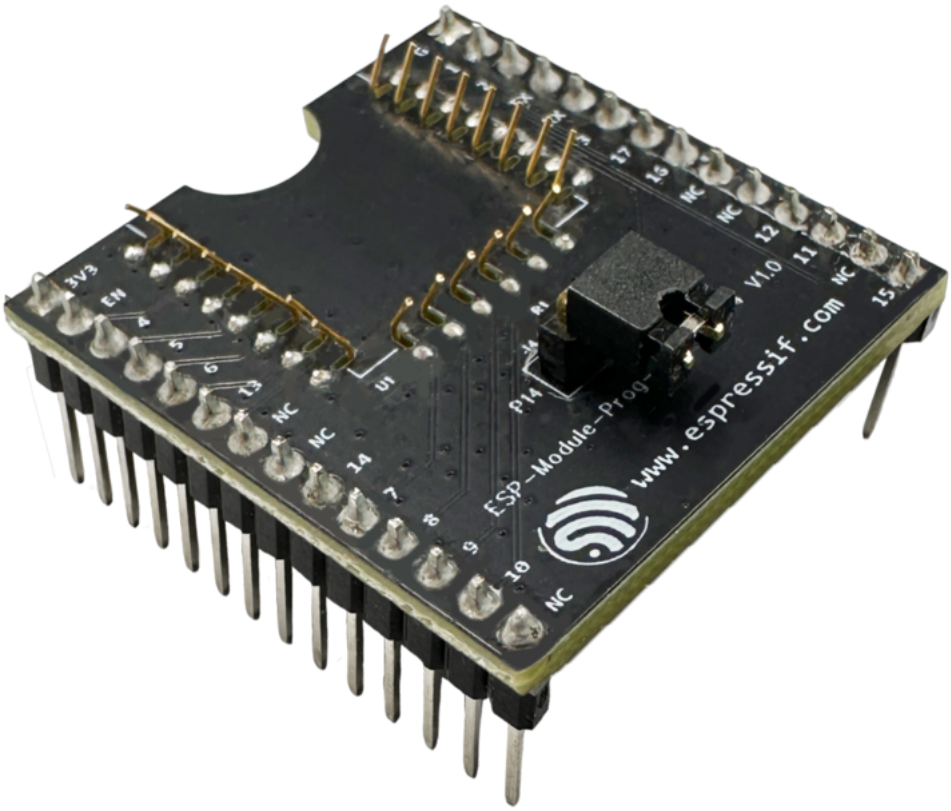

Fig. 1: ESP-Module-Prog-SUB-01&04

- ESP8684-WROOM-01C
- ESP8685-WROOM-04
- ESP8684-WROOM-04C

For information about the above modules, please refer to Espressif Series Modules.

Description of Components

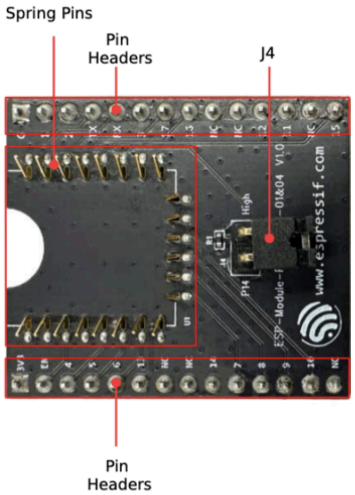

Fig. 2: ESP-Module-Prog-SUB-01&04 - Front

The key components of the board are described in a clockwise direction.

Key Component	Description
Spring Pins	Pins that fit into the module' s castellated holes for attaching and securing the module.
Pin Headers	2.54 mm pin headers that are connected to the pins of the module mounted in this board and to the mainboard. For detailed information, please refer to Section *Pin Descriptions*.
J4	Configures the strapping pin. For details, please refer to Section *Strapping Pin Configuration*.
ESP-Module-Prog-1(R)	ESP-Module-Prog-1 and ESP-Module-Prog-1R (R stands for WROVER) are two flashing mainboards produced by Espressif. For detailed information about the mainboard, please refer to *ESP-Module-Prog-1(R)*.

5.1.2 Start Application Development

Before powering up your ESP-Module-Prog-SUB-01&04, please make sure that it is in good condition with no obvious signs of damage.

Required Hardware

- Any one of the above-mentioned Espressif modules
- USB-A to USB-C cable
- PC (Windows, Linux, or macOS)
- ESP-Module-Prog-1 or ESP-Module-Prog-1R mainboard

Note: Please make sure to use the appropriate USB cable. Some cables can only be used for charging, not for data transfer or program flashing.

Hardware Setup

Mount the module to the ESP-Module-Prog-SUB-01&04 subboard as follows:

1. Place the module lightly on ESP-Module-Prog-SUB-01&04, making sure the castellated holes on the module are aligned with the spring pins on the board.
2. Press the module inward until you hear a "click", which indicates that the module has been successfully mounted.
3. Check if all the spring pins are clicked into the castellated holes. If there is a misalignment, you can use tweezers to poke the spring pins into the castellated holes.
4. Mount the subboard to the mainboard.

Now the board is ready for software setup.

Software Setup

Recommended Approach It is recommended to use the ESP-IDF development framework to flash the binary file (*.bin) to ESP-Module-Prog-SUB-01&04. Please refer to ESP-IDF Get Started to get a quick overview of setting up your development environment and flashing applications.

Alternative Approach For Windows systems, you can also use the Flash Download Tool to flash the binary files.

Note:

1. To flash binary files, the chip should be set to Firmware Download mode. This can be done either by the flash tool automatically, or by holding down the Boot button and tapping the Reset button.
2. After flashing binary files, the Flash Download Tool restarts your module and boots the flashed application by default.

5.1.3 Hardware Reference

This section provides more detailed information about the board's hardware.

Block Diagram

The block diagram below shows the components of ESP-Module-Prog-SUB-01&04 and their interconnections.

Strapping Pin Configuration

J4 on ESP-Module-Prog-SUB-01&04 is a 2-Pin header, with one end being P14 and one end being High (i.e. pull-up):

- For some modules, the corresponding pin of P14 is not a strapping pin and no pull-up is needed for downloading. In this case, a jump cap is not required for J4.
- For some modules, the corresponding pin of P14 is a strapping pin and a pull-up is needed for downloading. In this case, a jump cap is required for J4.

Note:

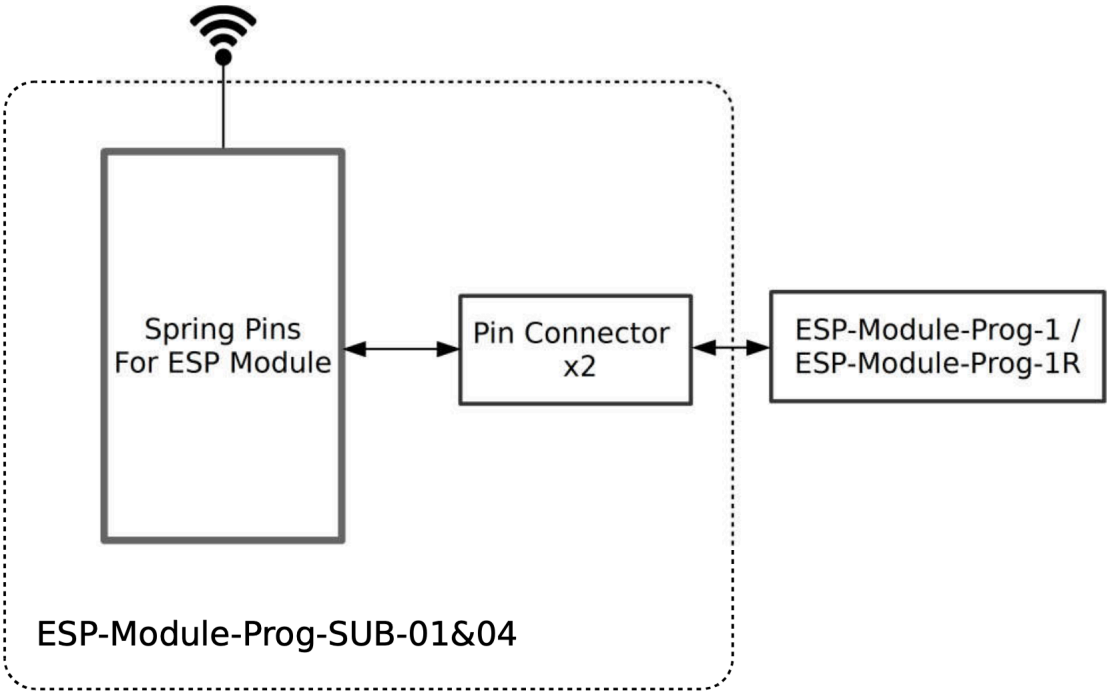

Fig. 3: ESP-Module-Prog-SUB-01&04

1. For the corresponding pin of P14 on Espressif modules, please refer to ESP-Module-Prog-SUB-01&04 GPIO Map.
2. ESP-Module-Prog-SUB-01&04 is currently fitted to ESP8684 series modules, where P14 needs to be pulled up. So, J4 requires a jump cap by default.

Pin Descriptions

The two tables below provide the **Name** and **Signal** of pin headers on both sides of the board (J2 and J3). The pin names are shown in Figure *ESP-Module-Prog-SUB-01&04 - Front*. The numbering is the same as in the ESP-Module-Prog-SUB-01&04 Schematics (PDF). For the corresponding pin of each signal on Espressif modules, please refer to ESP-Module-Prog-SUB-01&04 GPIO Map.

J2

No.	Name	Signal
1	3V3	3.3 V power supply
2	EN	CHIP_EN (High: enables the chip; Low: disables the chip. Pulled up by default.)
3	4	P4
4	5	P5
5	6	P6
6	13	P13
7	NC	No connection
8	NC	No connection
9	14	P14
10	7	P7
11	8	P8
12	9	P9
13	10	P10
14	NC	No connection

J3

No.	Name	Signal
1	G	Ground
2	1	P1
3	2	P2
4	TX	TXD0
5	RX	RXD0
6	3	P3
7	17	P17
8	16	P16
9	NC	No connection
10	NC	No connection
11	12	P12
12	11	P11
13	NC	No connection
14	15	P15

5.1.4 Sample Request

Retail Orders

If you order a few samples, each ESP-Module-Prog-SUB-01&04 comes in an individual package in either antistatic bag or any packaging depending on your retailer.

For retail orders, please go to https://www.espressif.com/en/company/contact/buy-a-sample.

Wholesale Orders

If you order in bulk, the boards come in large cardboard boxes.

For wholesale orders, please go to https://www.espressif.com/en/contact-us/sales-questions.

5.1.5 Related Documents

- ESP-Module-Prog-SUB-01&04 GPIO Map (XLS)
- ESP-Module-Prog-SUB-01&04 Schematics (PDF)
- ESP-Module-Prog-SUB-01&04 PCB Layout (PDF)
- ESP-Module-Prog-SUB-01&04 Dimensions (PDF)
- ESP-Module-Prog-SUB-01&04 Dimensions source file (DXF) - You can view it with Autodesk Viewer online
- Espressif Modules Datasheet
- Espressif Product Selector

Debugging and Flashing Development Boards	
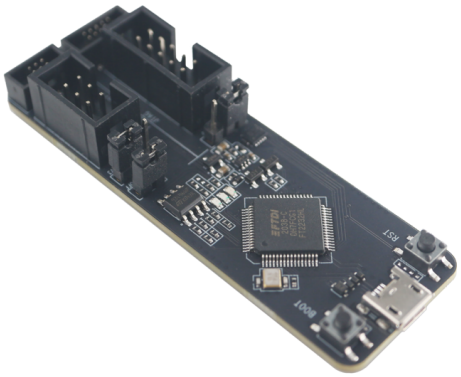	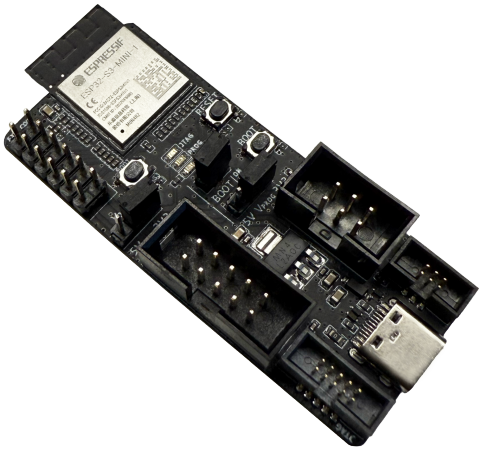
ESP-Prog	ESP-Prog-2
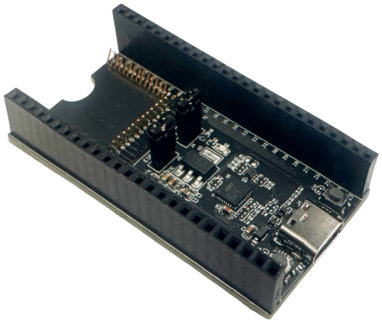	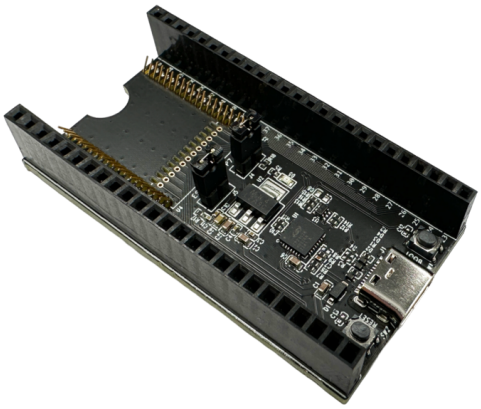
ESP-Module-Prog-1	ESP-Module-Prog-1R
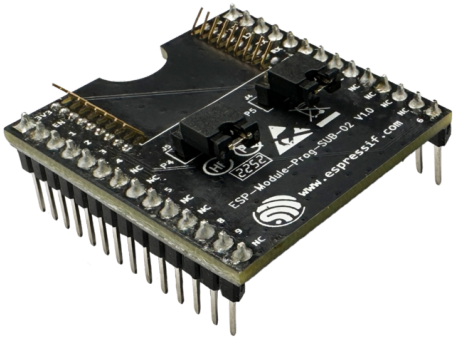	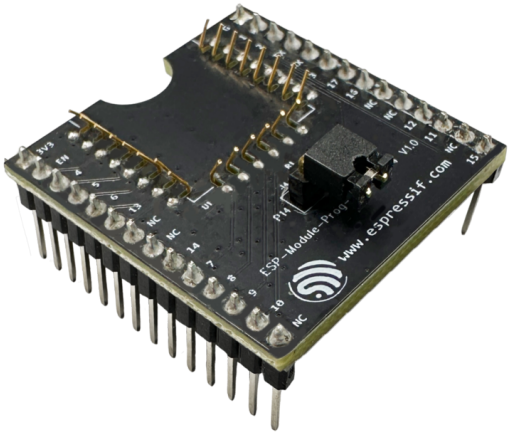
ESP-Module-Prog-SUB-02	ESP-Module-Prog-SUB-01&04

Chapter 6

Related Documentation and Resources

6.1 Developer Zone

- ESP-IDF Programming Guide –Extensive documentation for the ESP-IDF development framework.
- ESP-IoT-Solution Programming Guide - Extensive documentation for the ESP-IoT-Solution development framework.
- ESP-FAQ - A summary document of frequently asked questions released by Espressif.
- ESP-IDF and other development frameworks on GitHub.
  https://github.com/espressif
- ESP32 BBS Forum –Engineer-to-Engineer (E2E) Community for Espressif products where you can post questions, share knowledge, explore ideas, and help solve problems with fellow engineers.
  https://esp32.com/
- The ESP Journal –Best Practices, Articles, and Notes from Espressif folks.
  https://blog.espressif.com/
- See the tabs SDKs and Demos, Apps, Tools, AT Firmware.
  https://espressif.com/en/support/download/sdks-demos

6.2 Products

- ESP Product Selector –Find an Espressif hardware product suitable for your needs by comparing or applying filters.
  https://products.espressif.com/#/product-selector

6.3 Contact Us

- See the tabs Sales Questions, Technical Enquiries, Circuit Schematic & PCB Design Review, Get Samples (Online stores), Become Our Supplier, Comments & Suggestions.
  https://espressif.com/en/contact-us/sales-questions

Chapter 7

Disclaimer and Copyright Notice

Information in this document, including URL references, is subject to change without notice.

All third party' s information in this document is provided as is with no warranties to its authenticity and accuracy.

No warranty is provided to this document for its merchantability, non-infringement, fitness for any particular purpose, nor does any warranty otherwise arising out of any proposal, specification or sample.

All liability, including liability for infringement of any proprietary rights, relating to use of information in this document is disclaimed. No licenses express or implied, by estoppel or otherwise, to any intellectual property rights are granted herein.

The Wi-Fi Alliance Member logo is a trademark of the Wi-Fi Alliance. The Bluetooth logo is a registered trademark of Bluetooth SIG.

All trade names, trademarks and registered trademarks mentioned in this document are property of their respective owners, and are hereby acknowledged.

Mouser Electronics

Authorized Distributor

Click to View Pricing, Inventory, Delivery & Lifecycle Information:

Espressif:

ESP-Prog-2