GENERAL TOLERANCE							
	10MAX	50MAX	100MAX	250MAX	2500VR	ANGLE	ECCENT
TOLERANCE	±0.5	±0.8	±1.5	±2.5	±3	±5°	0.3

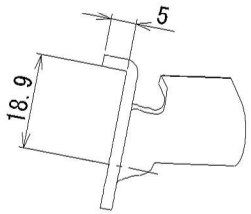

VIEW A

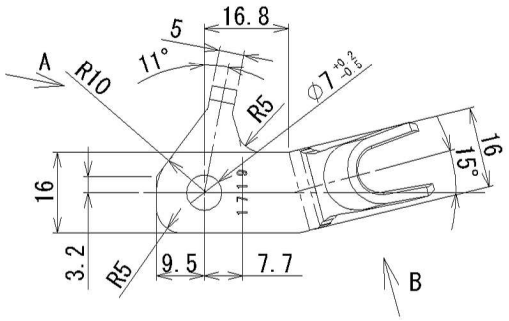

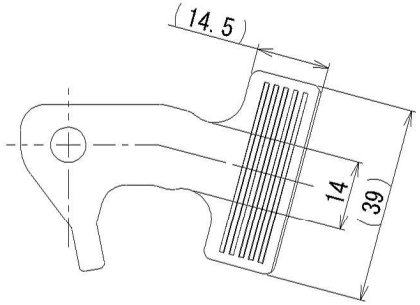

BLANK FORM

注記
1. 適応電線サイズ:AV(EB)20、30

NOTE
1. APPLICABLE WIRE SIZE:AV(EB) 20,30

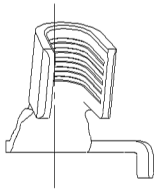

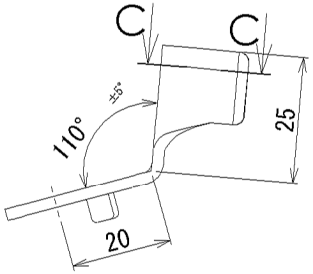

VIEW B

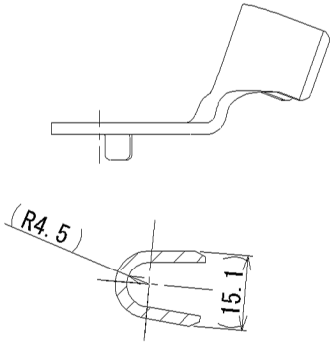

SEC. C-C

	07.02.22	NEW	C07-0026	H.O
LET	DATE	REVISION RECORD	NO.	CHKD

GENERAL TOLERANCE							
	10MAX	50MAX	100MAX	250MAX	2500VR	ANGLE	ECCENT
A	±0.15	±0.2	±0.3	±0.5	±0.75	±30'	0.1
B	±0.2	±0.3	±0.55	±0.95	±1.4	±30'	0.1
C	±0.3	±0.5	±0.8	±1.4	±2	±30'	0.15

SPECIFIED

MASS 25g

CUSTOMER					
CUSTOMER PART NO.		CUSTOMER DWG NO.			
OFFICE		TRIAL PART NO.			
VENDOR					
VENDOR NO.					
DWG TYPE	DWG SOURCE	DWG DATE	UNIT	SCL	ANGLE
R	NEW	07.02.22	mm	1:1	3
APPROVED	CHECKED	CHECKED	DESIGN	DRAWN	
鈴木（登）	鈴木(泰)	塩浜	M.IWATA	H.OOSHIMA	
			05.11.08	07.02.22	

MATL. SPEC. C2801R(t=2.3) (JIS H 3100)

TREAT. & FIN. TIN PLATE

NAME BA TERMINAL

PART NO. CH. CODE 7003-1719-02

DWG NO. 7003-1719-02:R

SET DRW NO.

YAZAKI CORPORATION

ISSUE MARK

2007年2月22日 20:51:28