CHARX T2HBI12-3AC32DC375-2,0C2 - Vehicle charging inlet

1720095

https://www.phoenixcontact.com/us/products/1720095

Please be informed that the data shown in this PDF document is generated from our online catalog. Please find the complete data in the user documentation. Our general terms of use for downloads are valid.

CHARX connect universal, AC/DC CCS Typ 2, Vehicle charging inlet, > 500 A in Boost mode, 325 A permanent, 1000 V DC, 32 A , 480 V AC, Single wires, length: 2 m, locking actuator: 12 V, 4-pos., Front and rear mounting, M6, housing: black, for charging with alternating current (AC) and with direct current (DC), IEC 62196-1, IEC 62196-2, A protective cap is supplied as standard for the DC and AC contacts.

Product description

Vehicle charging inlet for charging with direct current (DC), compatible with type 2 CCS vehicle charging connectors (EVSE), for installation in electric vehicles (EV).

Your advantages

- Complete product range
- Uniform, space-saving dimensions for the installation space and the screw connection points of all Phoenix Contact vehicle charging inlets
- Developed and produced in accordance with the IATF 16949 automotive standard and ISO 9001
- Integrated interlock during charging
- Manual emergency release of the locking actuator
- Protected and sealed against dirt and water with a high degree of protection

Commercial data

Item number	1720095
Packing unit	1 pc
Minimum order quantity	1 pc
Sales key	EM01
Product key	XWCAID
GTIN	4067923271166
Weight per piece (including packing)	9,040 g
Weight per piece (excluding packing)	9,040 g
Customs tariff number	85444290
Country of origin	PL

Technical data

Notes

General	A protective cap is supplied as standard for the DC and AC contacts.

Product properties

Product type	Vehicle charging inlet
Product family	CHARX connect universal
Application	for charging with alternating current (AC) and with direct current (DC)
	for installation in electric vehicles (EV)
Charging standard	AC/DC CCS Typ 2
Charging mode	Mode 2, 3, 4
Customer variations	On request

Electrical properties

Note on the connection method	Crimp connection, cannot be disconnected
Temperature measurement	DC contacts: 2x PT1000 (DIN EN 60751)
Temperature monitoring	AC contacts: PTC chain (DIN EN 60738-1)

Charging power and current (AC charging (3-phase))

Type of charging current	AC 3-phase
Charging current	32 A AC (3-phase)
Charging power	26.6 kW

Charging power and current (DC charging)

Type of charging current	DC
Charging current	325 A DC
Charging power	325 kW

Charging power and current (DC charging in Boost Mode)

Type of charging current	DC Boost Mode
Charging current	> 500 A DC
Charging power	> 500 kW
Rated voltage	1000 V
Note	The specifications refer to charging in Boost Mode and are dependent on ambient conditions. For further details, see the packing slip in the download area.

Pin assignment (Leistungskontakte)

Number	7 (L1, L2, L3, N, PE, DC+, DC-)
Rated voltage	480 V AC
	1000 V DC
Rated current	32 A AC
	325 A DC

Pin assignment (Signalkontakte)

Type of signal transmission	Pulse width modulation with modulated Powerline communication in accordance with ISO/IEC 15118 / DIN SPEC 70121
Number	2 (CP, PP)
Rated voltage	30 V AC
Rated current	2 A
Coding	4.7 kΩ (between PE and PP)
Insulation resistance	> 200 MΩ

Locking actuator

Locking actuator	12 V, 4-pos.
	Right position
Possible power supply range at the motor	9 V ... 16 V
Maximum voltage for locking detection	12 V
Typical motor current for locking	0.25 A
Reverse current of the motor	max. 1.5 A
Max. dwell time with reverse current	1 s
Recommended adaptation time	600 ms
Pause time after entry or exit path	3 s
Service life insertion cycles	> 10000 load cycles
Lock recognition	available
Mechanical emergency release	available
Ambient temperature (operation)	-40 °C ... 80 °C

Temperature sensors (PTC chain)

Sensor type	PTC chain
Standards/regulations	DIN EN 60738-1
Attachment point	Sensor for the AC contacts
Measuring range_resistance	790 Ω ... 1420 Ω
Resistance	max. 1280 Ω ±5 K
Recommended measured current	≤ 1 mA (U_{max}= 16 V DC)
Ambient temperature	-40 °C ... 130 °C (Operation)

Temperature sensors (Pt 1000)

Sensor type	Pt 1000
Standards/regulations	DIN EN 60751
Attachment point	2 sensors for the DC contacts

Material specifications

Color (Housing)	black (9005)
Color (Mating face)	black (9005)
Material (Housing)	Plastic
Material (Contact surface)	Silver

Cable/line

Cable length	2 m
Cable type	Single wires
Single wire, cross section	120.00 mm²

Single-core wires for AC

Cable length	2 m
Cable structure	4 x 6 mm²
Single wire, material	Silicone
Single wire, color	OG
External cable diameter	14.70 mm ±0.2 mm
Cable resistance	≤ 3.2 Ω/km

Single-core wires for DC

Cable length	2 m
Cable structure	2 x 120 mm²
Single wire, material	Silicone
Single wire, color	OG
External cable diameter	23.00 mm -0.8 mm

Single-core wire for PE

Cable length	1.5 m
Cable structure	1 x 25 mm²
Single wire, material	Silicone
Single wire, color	GN/YE
External cable diameter	8.60 mm ±0.1 mm
Cable resistance	≤ 0.743 Ω/km

Single-core wires for locking actuator

Cable length	1.5 m
Cable structure	4 x 0.5 mm²
Single wire, material	PVC
Single wire, color	BU/RD, BU/GN, BU/YE, BU/BN
External cable diameter	1.60 mm ±0.20 mm
Cable resistance	≤ 37.1 Ω/m

Single-core wires for PTC temperature sensors

Cable length	2 m
Cable structure	3 x 0.5 mm²
Single wire, material	PVC
Single wire, color	BN
	GN
	YE
External cable diameter	1.60 mm ±0.20 mm
Cable resistance	≤ 37.1 Ω/m

Single-core wires for Pt 1000 temperature sensors

Cable length	2 m

Cable structure	3 x 0.5 mm²
Single wire, material	PVC
Single wire, color	BN
	GN
	YE
External cable diameter	1.60 mm ±0.20 mm
Cable resistance	≤ 37.1 Ω/m

Single-core wires for communication

Cable length	2 m
Cable structure	2 x 0.5 mm²
Single wire, material	PVC
Single wire, color	BK
	WH
External cable diameter	1.60 mm ±0.20 mm
Cable resistance	≤ 37.1 Ω/m

Mechanical properties

Mechanical data

Insertion/withdrawal cycles	> 10000
Insertion force	< 100 N
Withdrawal force	< 100 N

Environmental and real-life conditions

Ambient conditions

Degree of protection (Vehicle charging inlet)	IP6K5
Ambient temperature (operation)	-40 °C ... 40 °C (60°C, maximum (current reduction required, observe the DC contact temperature limit value of 90°C))
Ambient temperature (storage/transport)	-40 °C ... 85 °C
Altitude	4000 m (above sea level)

Standards and regulations

Standards

Standards/regulations	IEC 62196-1
	IEC 62196-2
	IEC 62196-3

Mounting

Mounting type	Front and rear mounting (0 to 90 degree frontal inclination possible)
Mounting hole diameter	6.70 mm (ø)
Fixing screws	M6
Screws included in the scope of delivery	none

Drawings

Dimensional drawing

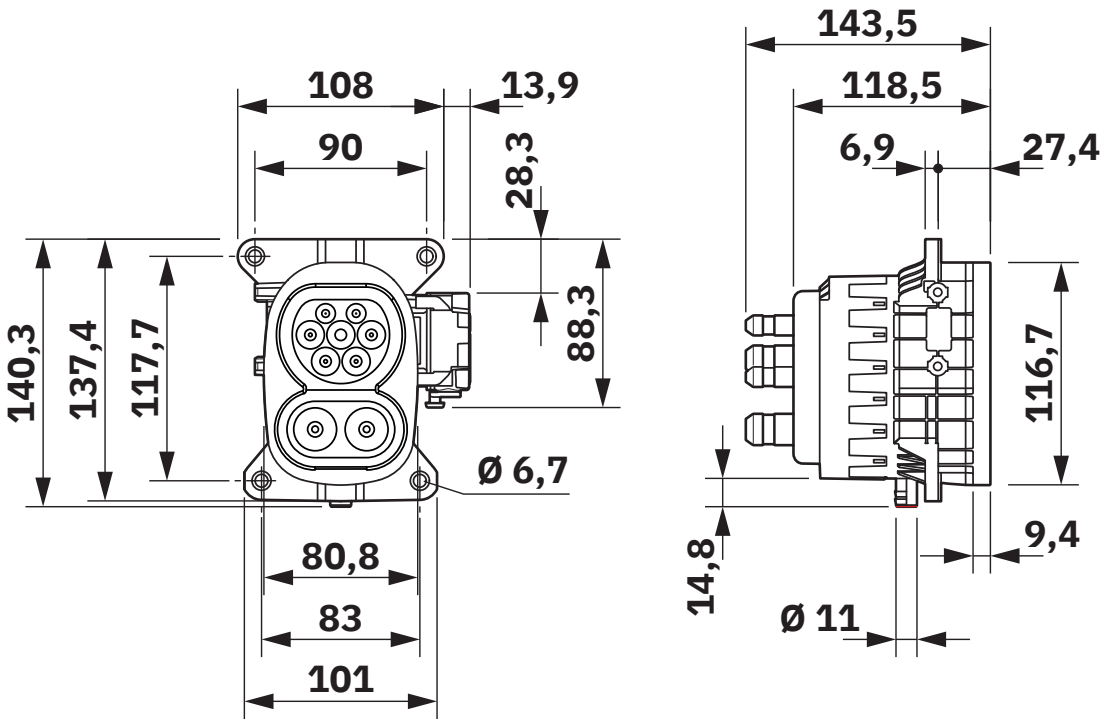

Dimensional drawing

Dimensional drawing

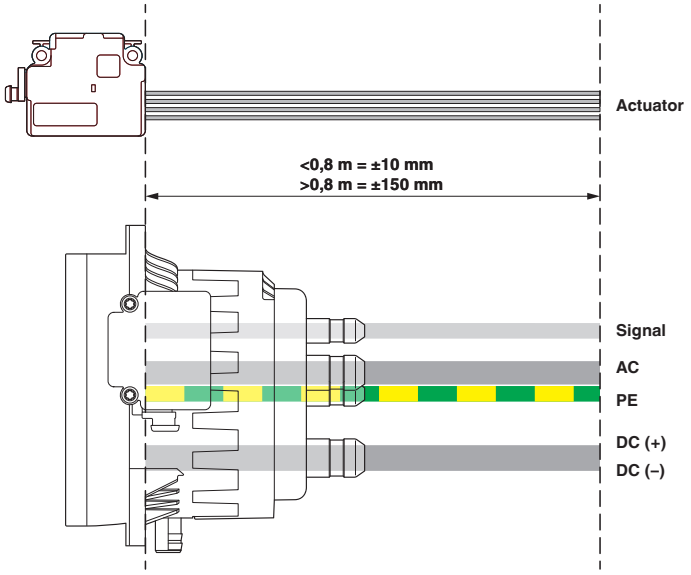

Reference points for measuring the line length

Connection diagram

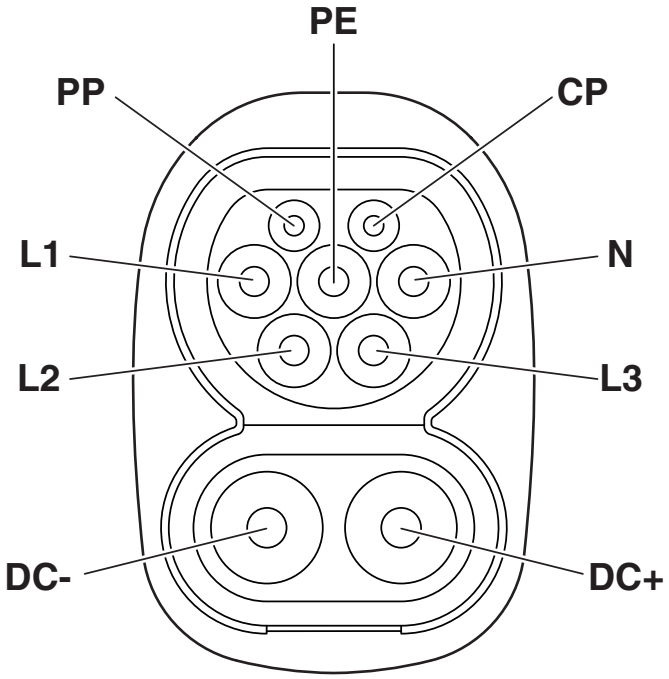

Pin assignment of vehicle charging inlets

Connection diagram

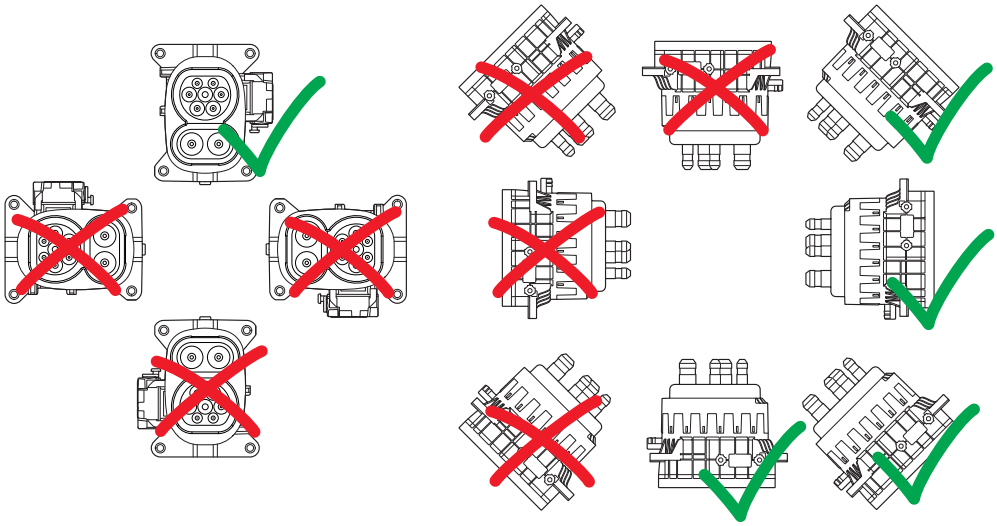

Installation positions

Connection diagram

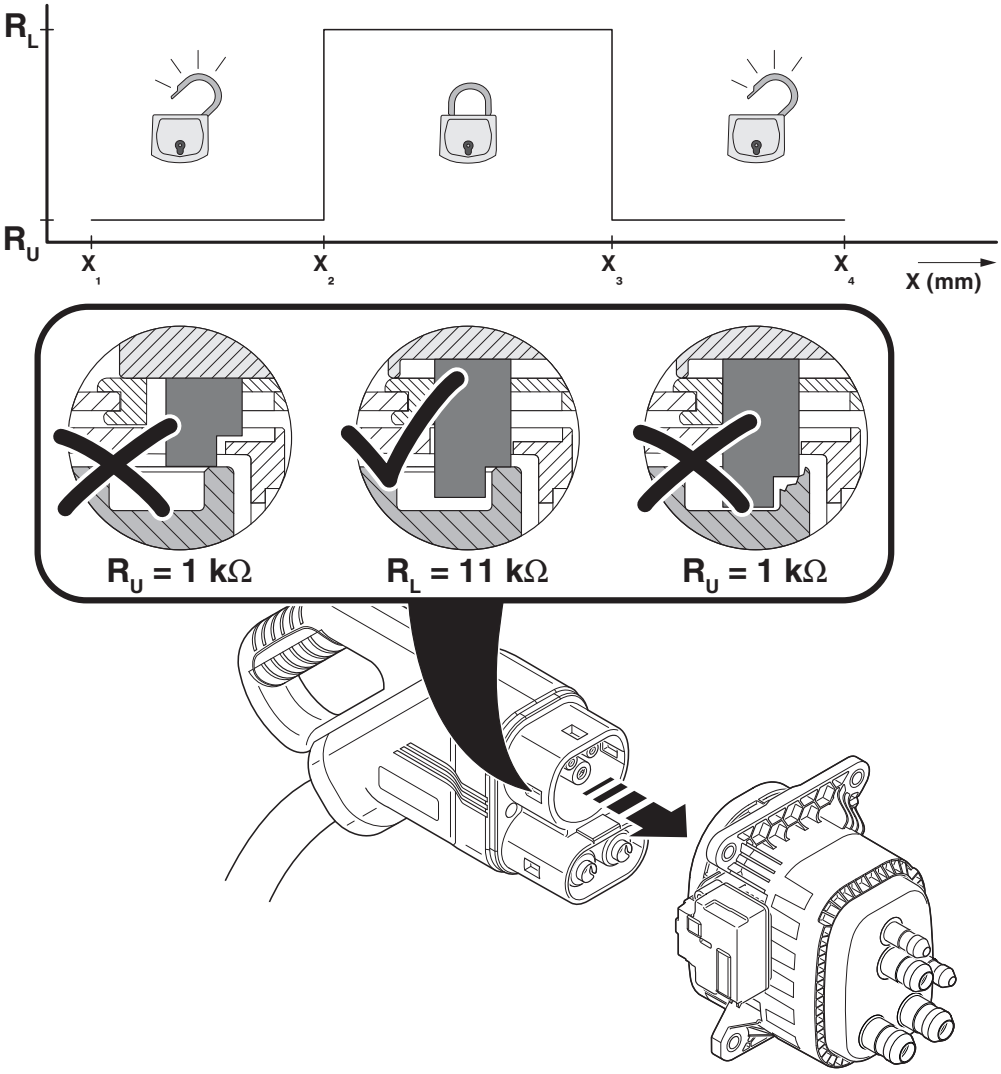

Detection for Vehicle Connector

Schematic diagram

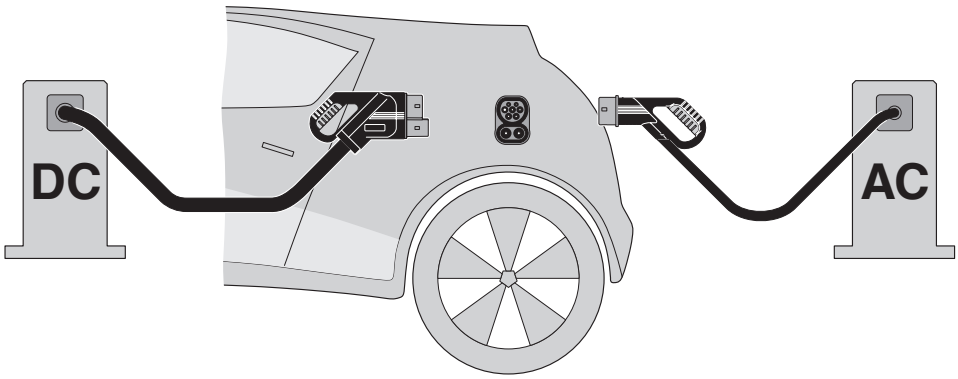

The Combined Charging System (CCS) principle - standard-compliant charging system for electric vehicles, which supports both conventional AC charging and fast DC charging. Both Vehicle Connectors fit into the CCS Vehicle Inlet.

Schematic diagram

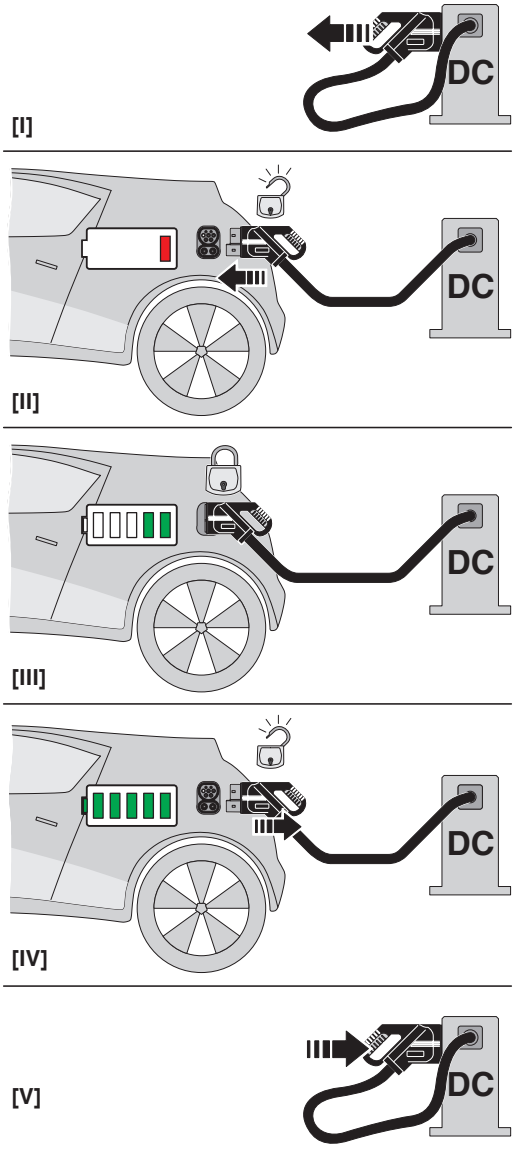

Operating instructions

Schematic diagram

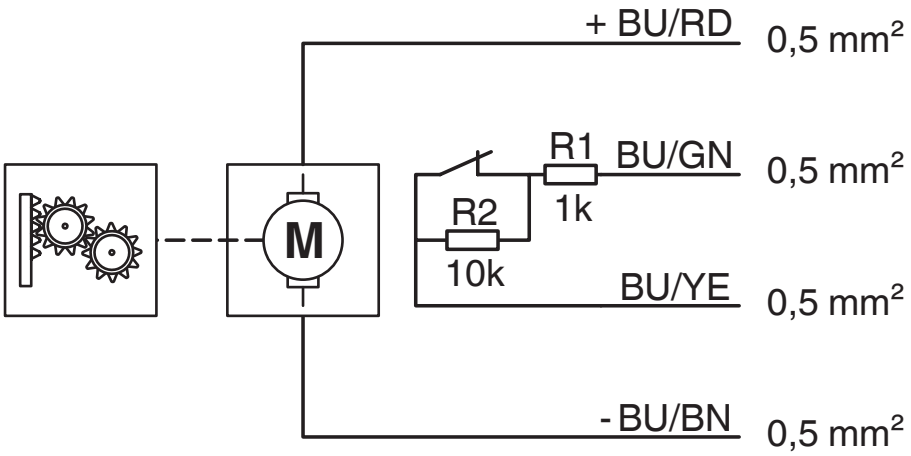

Block diagram of the locking actuator

Schematic diagram

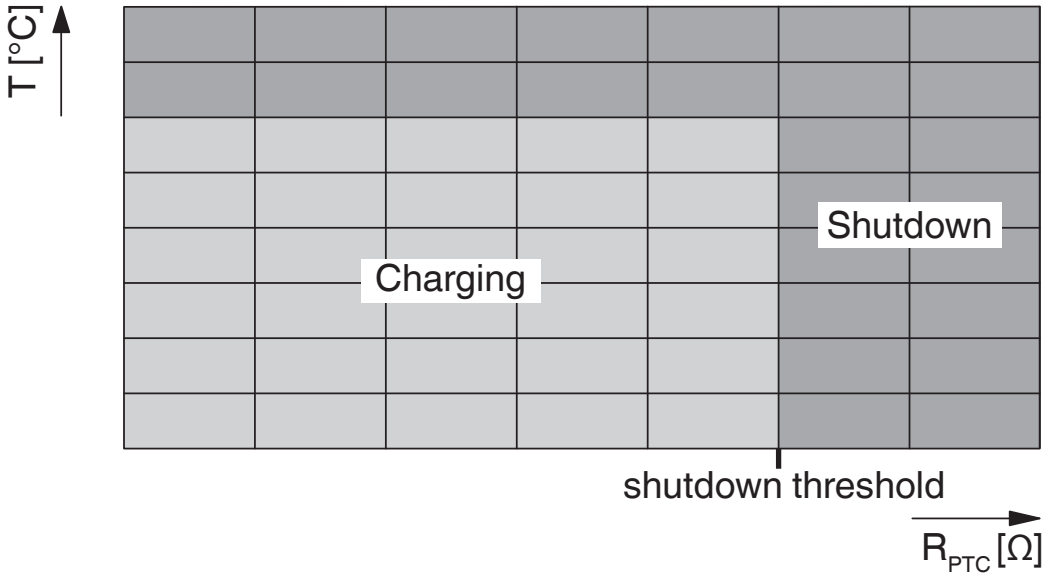

Temperature sensor technology resistance range at AC contacts

Diagram

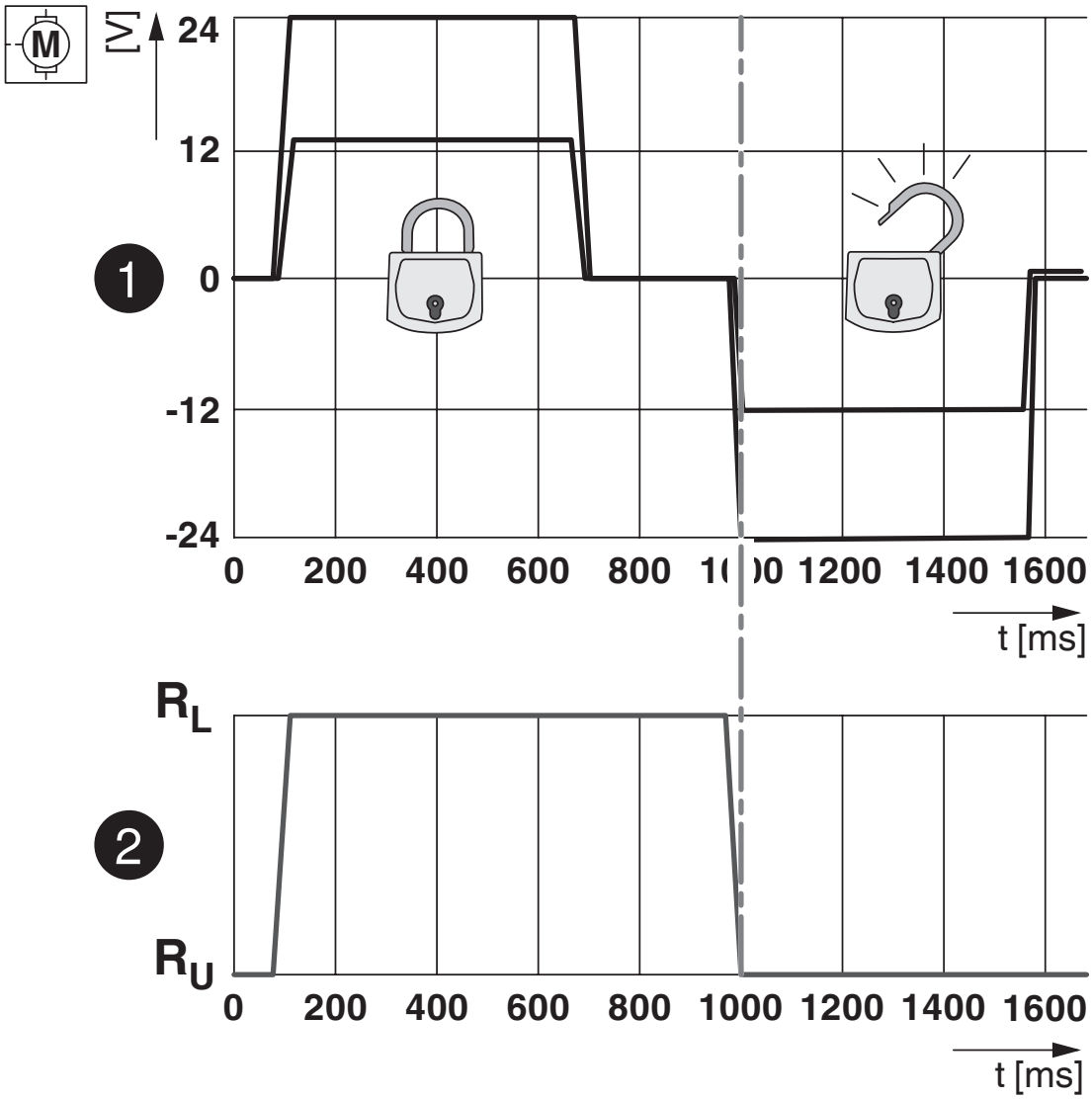

Locking states of the locking actuator

Diagram

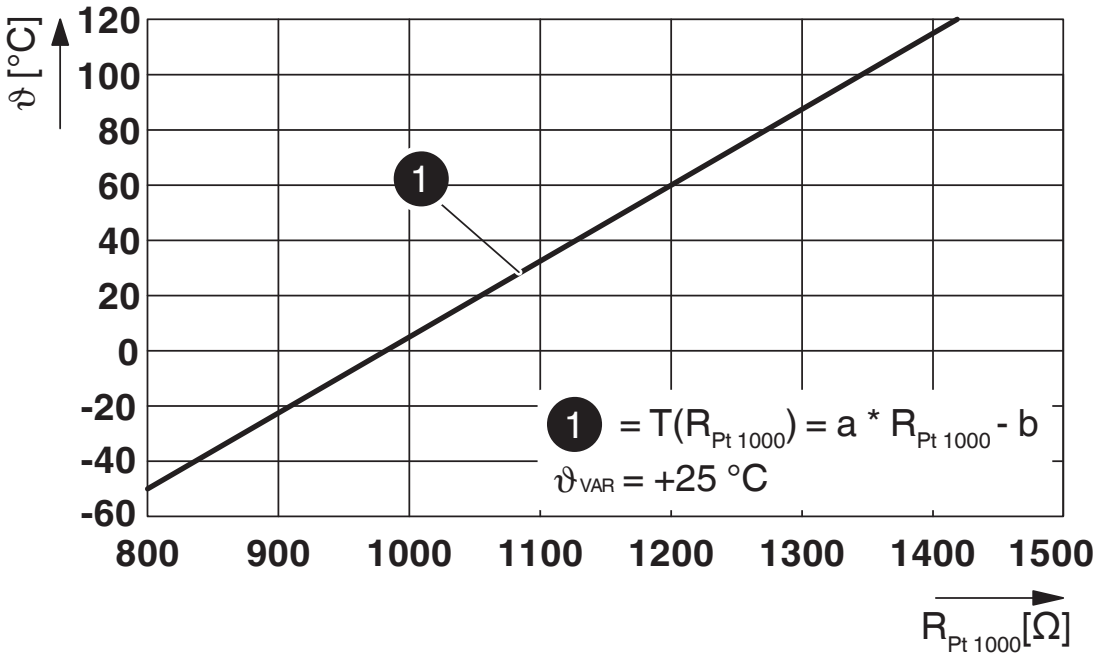

Pt 1000 characteristic curve at an ambient temperature of 25°C for temperature measurement at the DC contacts

Classifications

ECLASS

ECLASS-13.0	27144706
ECLASS-15.0	27144706

ETIM

ETIM 9.0	EC002898

Environmental product compliance

EU RoHS

Fulfills EU RoHS substance requirements	Yes
Exemption	7(c)-I

China RoHS

Environment friendly use period (EFUP)	EFUP-50
	An article-related China RoHS declaration table can be found in the download area for the respective article under "Manufacturer declaration". For all articles with EFUP-E, no China RoHS declaration table issued and required.

EU REACH SVHC

REACH candidate substance (CAS No.)	2-ethylhexyl 10-ethyl-4,4-dioctyl-7-oxo-8-oxa-3,5-dithia-4-stannatetradecanoate (DOTE)(CAS: 15571-58-1)
	6,6'-di-tert-butyl-2,2'-methylenedi-p-cresol(CAS: 119-47-1)

Phoenix Contact 2025 © - all rights reserved
https://www.phoenixcontact.com

Phoenix Contact USA
586 Fulling Mill Road
Middletown, PA 17057, United States
(+717) 944-1300
info@phoenixcon.com