GENERAL TOLERANCE						
10MAX	50MAX	100MAX	250MAX	2500VR	ANGLE	ECCENT
±0.5	±0.8	±1.5	±2.5	±3	±5°	0.3

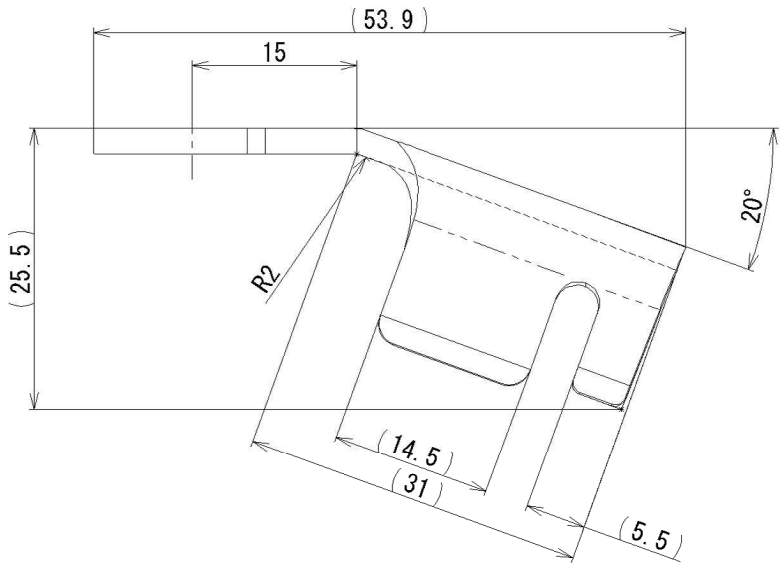

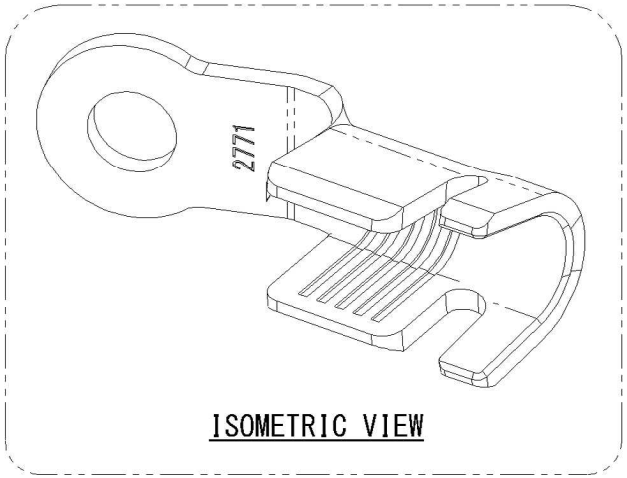

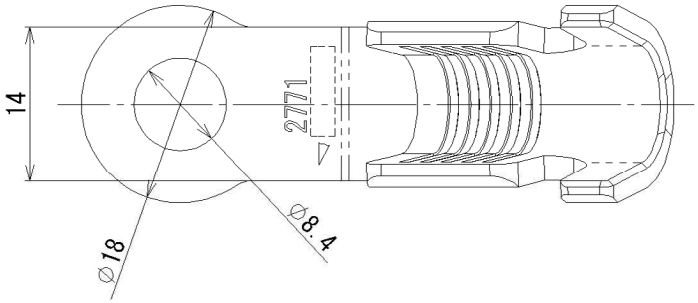

注 記
1. 適用電線サイズ:AVX-F 30sq
2. 適用ボルトサイズ : M8
3. 取付可能部品 : ALTERNATOR TERMINAL CAP
: 7034-1355-30

NOTES
1. APPLICABLE WIRE SIZE : AVX-F 30sq
2. APPLICABLE BOLT SIZE : M8
3. MATING PART : ALTERNATOR TERMINAL CAP
: 7034-1355-30

ISSUE MARK

	10.09.16	NEW	C10-0189	K.M
LET	DATE	REVISION RECORD	NO.	CHKD

GENERAL TOLERANCE							
	10MAX	50MAX	100MAX	250MAX	2500VR	ANGLE	ECCENT
A	±0.15	±0.2	±0.3	±0.5	±0.75	±30'	0.1
B	±0.2	±0.3	±0.55	±0.95	±1.4	±30'	0.1
C	±0.3	±0.5	±0.8	±1.4	±2	±30'	0.15

PECIFIED SEE TABLE

MASS 24.4 g

CUSTOMER					
CUSTOMER PART NO.		CUSTOMER DWG NO.			
OFFICE		TRIAL PART NO.			
VENDOR					
VENDOR NO.					
DWG TYPE	DWG SOURCE	DWG DATE	UNIT	SCL	ANGLE
R	NEW	10.09.16	mm	2:1	3
APPROVED	CHECKED	CHECKED	DESIGN	DRAWN	
T. SUZUKI	H. SATO		S. HARA	K. MORISHITA	
			10.06.04	10.09.16	

MATL. SPEC. COPPER ALLOY t=2.3

TREAT. & FIN. TIN PLATING

NAME TERMINAL

PART NO. CH. CODE 7003-2771-02

DWG NO. 7003-2771-02:R

SET DWG NO.

YAZAKI CORPORATION

2010年9月16日 10:3