CUI Devices is now Same Sky! Learn More

same sky



# MODEL: CMT-8503-36-SMT-TR | DESCRIPTION: MAGNETIC BUZZER TRANSDUCER

## FEATURES

- magnetic
- no driving circuit
- surface mount



RoHS

## SPECIFICATIONS

| parameter | conditions/description | min | typ | max | units |
|---|---|---|---|---|---|
| rated voltage | 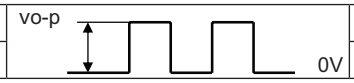  | | 3.6 | | Vo-p |
| operating voltage | | 2.5 | | 4.5 | Vo-p |
| current consumption | 3 Vo-p, 2,700 Hz, ½ duty square wave | | | 100 | mA |
| rated frequency | | | 2,700 | | Hz |
| sound pressure level | at 10 cm, 3 Vo-p, 2,700 Hz, ½ duty square wave | 85 | | | dB |
| coil resistance | | 13 | 16 | 19 | Ω |
| dimensions | 8.5 x 8.5 x 3.0 | | | | mm |
| weight | | 0.35 | 0.40 | 0.45 | g |
| material | LCP (UL94V-0) | | | | |
| terminal | surface mount (tin plating) | | | | |
| operating temperature | | -20 | | 70 | °C |
| storage temperature | | -40 | | 80 | °C |
| washable | no | | | | |
| RoHS | yes | | | | |

Notes: 1. All specifications measured at 25±5°C, humidity at 35~70%, under 86~106 kPa pressure, unless otherwise noted.

## SOLDERABILITY

| parameter | conditions/description | min | typ | max | units |
|---|---|---|---|---|---|
| reel storage | at relative humidity <40% | | | 25 | °C |
| reflow soldering[2] | see recommended reflow soldering profile | | 260 | | °C |
| drying conditions[3] | bake at 40°C for 24 hours | | | | |

Note: 2. It is recommended to reflow solder within 48 hours from opening vacuum packaging at a temperature <30°C & relative humidity <60%. Not recommended to exceed 2 reflow cycles.
3. When out of packaging for more than 48 hours.

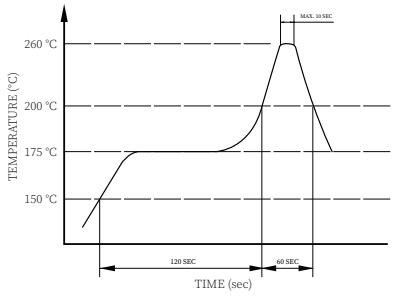

## MECHANICAL DRAWING

units: mm
tolerance: ±0.5 mm

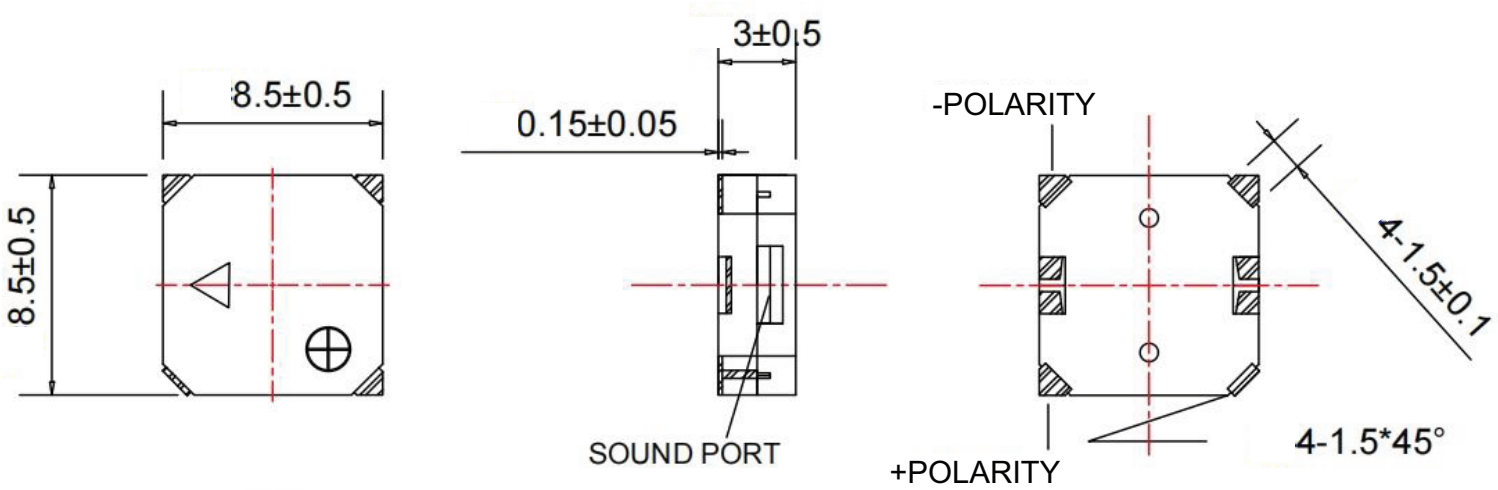


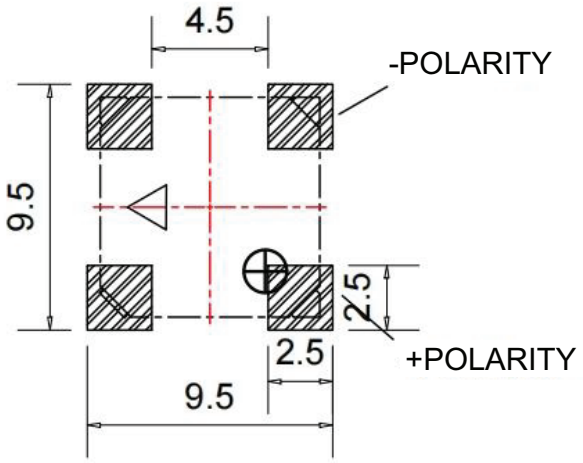


Recommended PCB Layout
Top View

## FREQUENCY RESPONSE CURVE

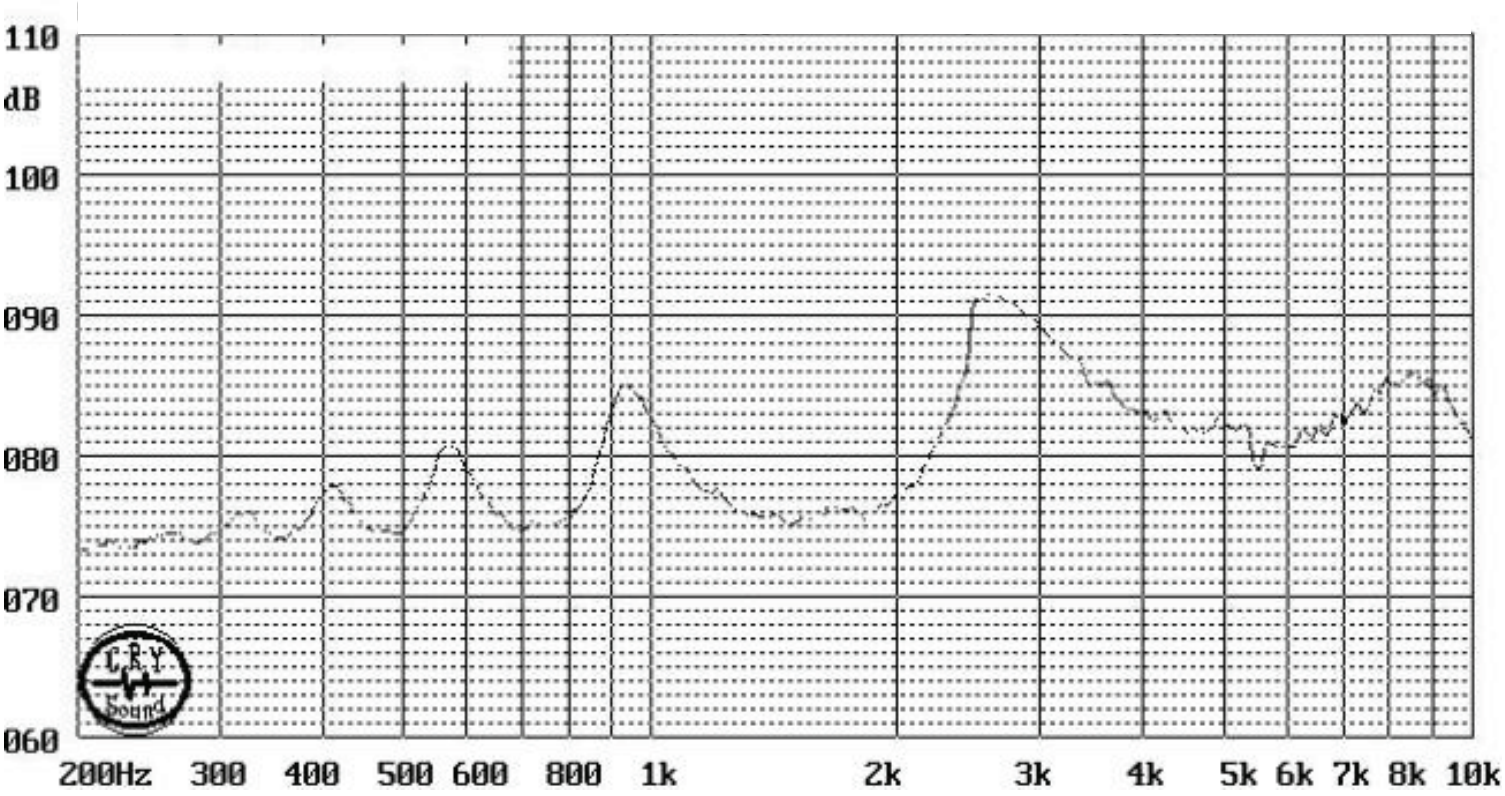


## APPLICATION CIRCUIT

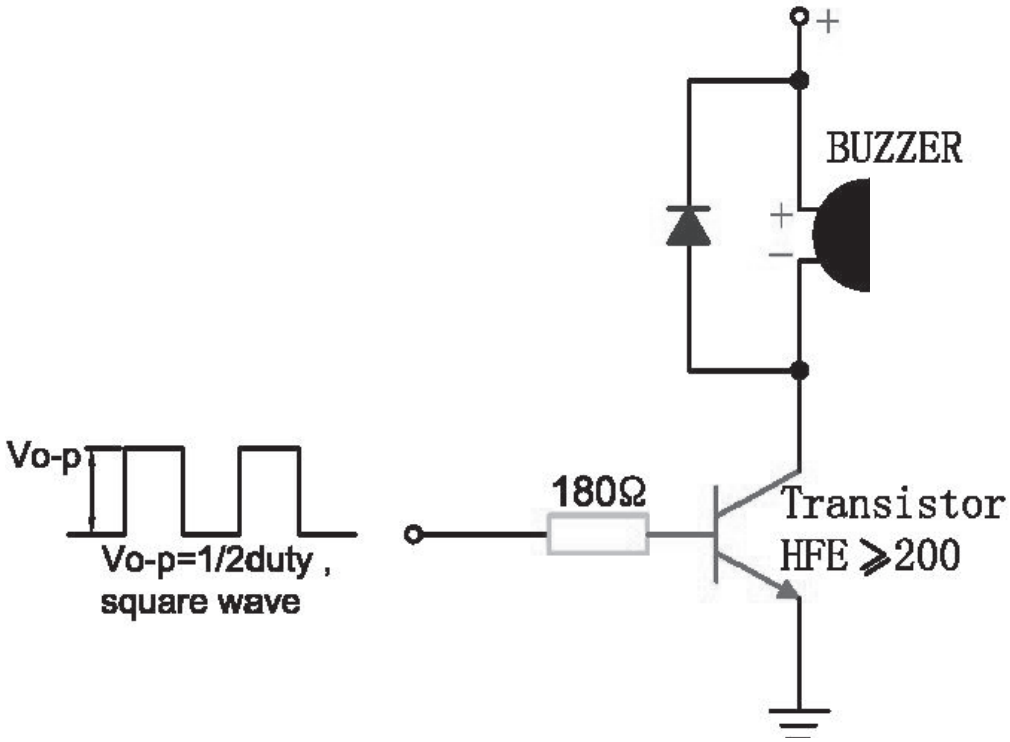

## PACKAGING

units: mm

Reel Size: Ø330 mm
Reel QTY: 1,000 pcs per reel
Carton Size: 370 x 350 x 350 mm
Carton QTY: 10,000 pcs per carton

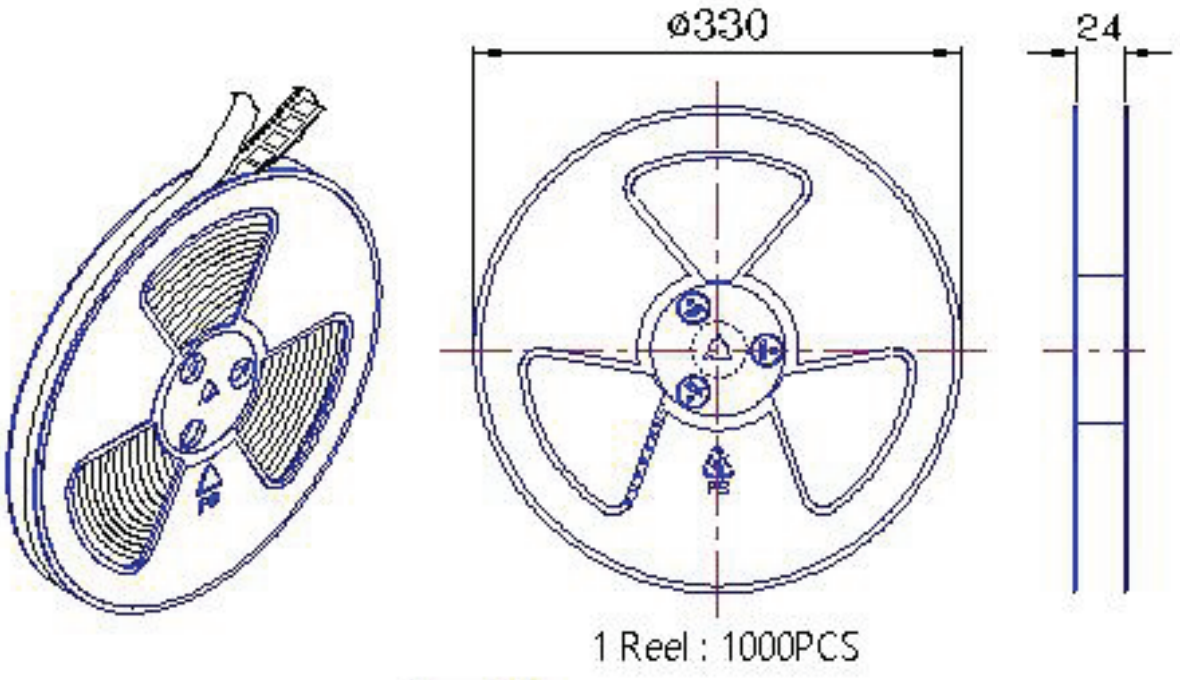


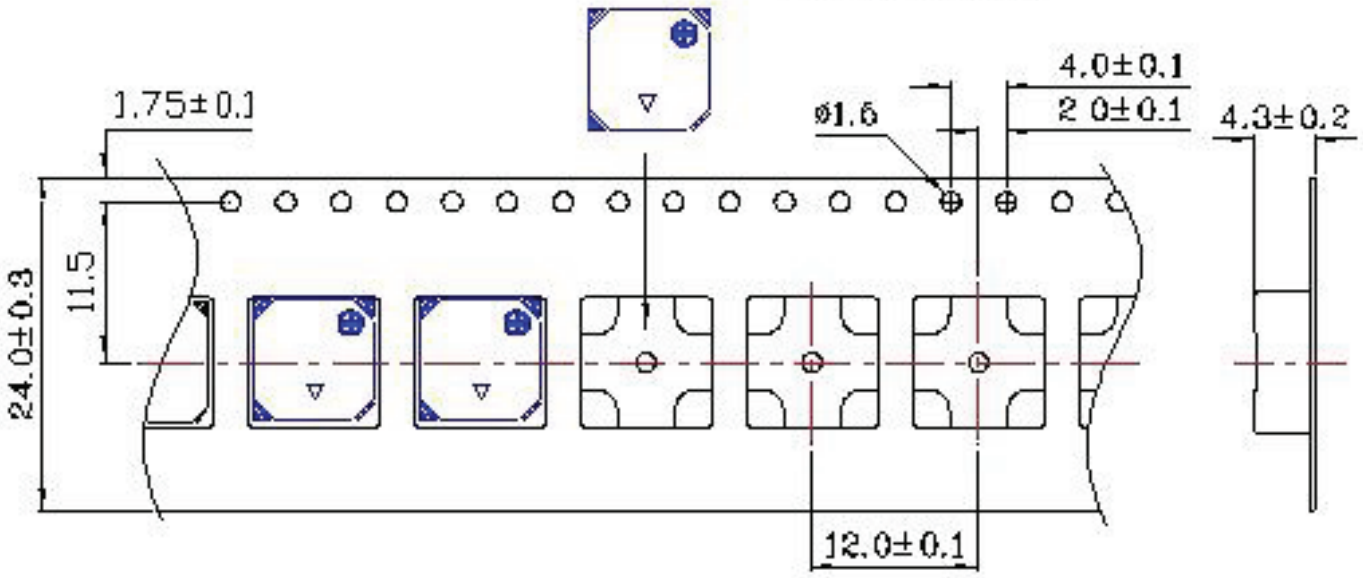

## REVISION HISTORY

| rev. | description | date |
|---|---|---|
| 1.0 | initial release | 09/12/2024 |

The revision history provided is for informational purposes only and is believed to be accurate.

same sky

Same Sky offers a one (1) year limited warranty. Complete warranty information is listed on our website.

Same Sky reserves the right to make changes to the product at any time without notice. Information provided by Same Sky is believed to be accurate and reliable. However, no responsibility is assumed by Same Sky for its use, nor for any infringements of patents or other rights of third parties which may result from its use.

Same Sky products are not authorized or warranted for use as critical components in equipment that requires an extremely high level of reliability. A critical component is any component of a life support device or system whose failure to perform can be reasonably expected to cause the failure of the life support device or system, or to affect its safety or effectiveness.

**sameskydevices.com**