DRAWING NUMBER	REV.
SD R12456	7

REF. STANDEX P/N R12456

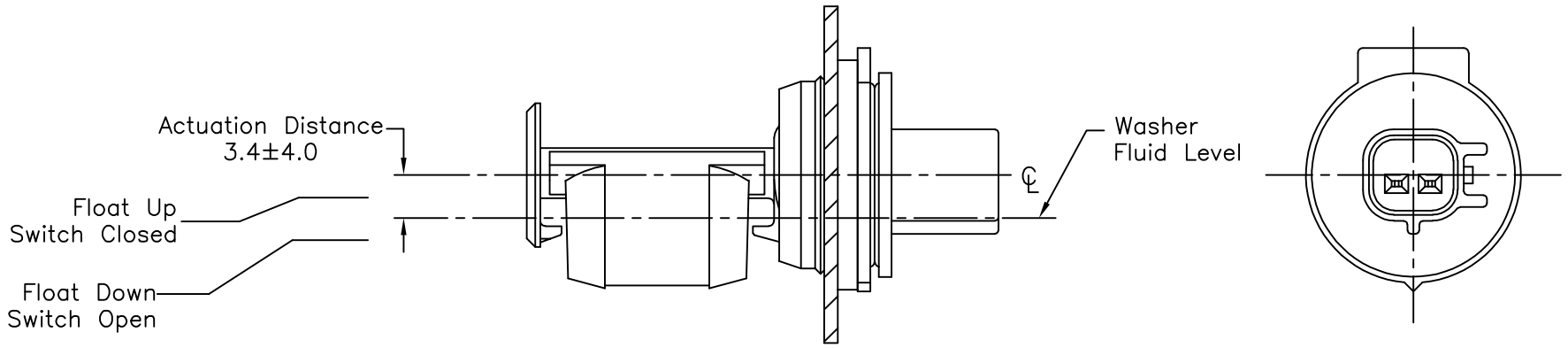

NORMALLY CLOSED (FLUID FULL) CONFIGURATION

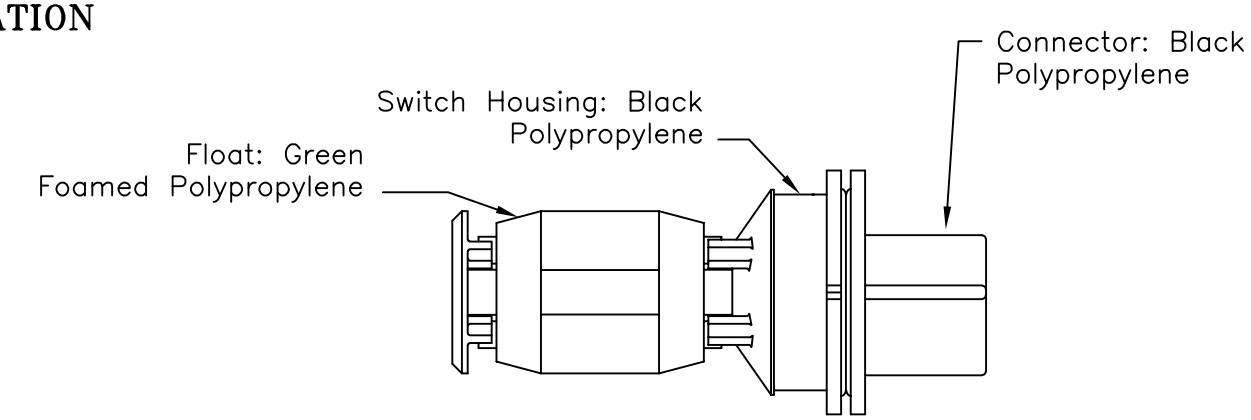

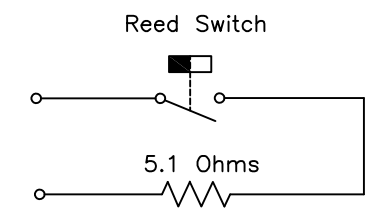

SENSOR SCHEMATIC

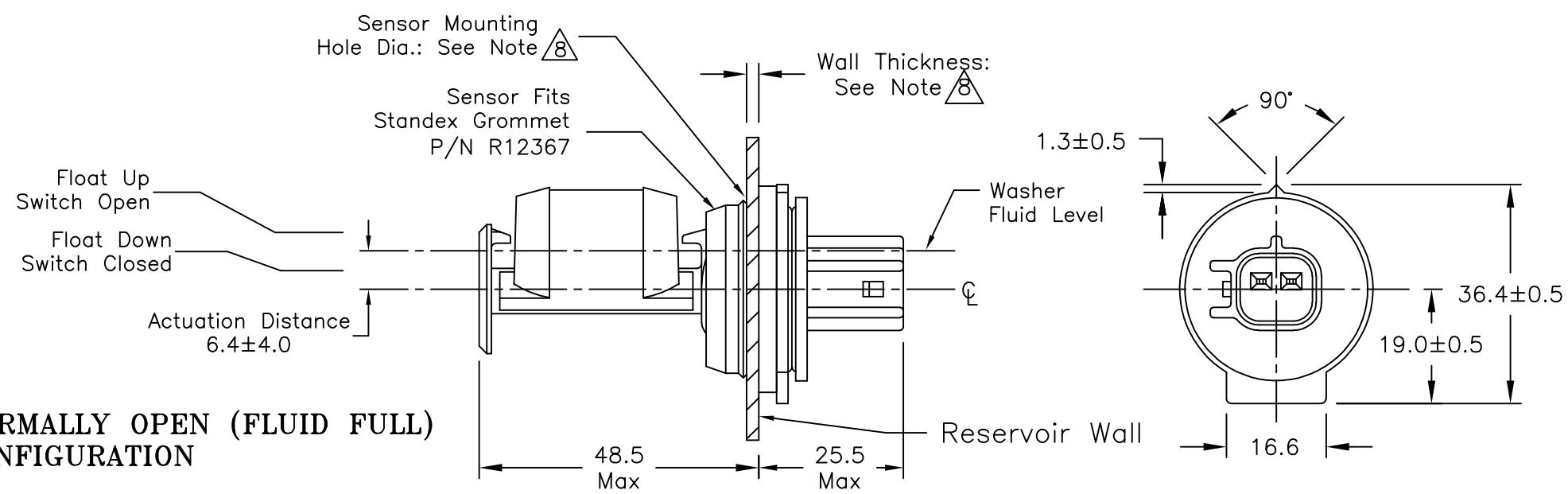

NORMALLY OPEN (FLUID FULL) CONFIGURATION

NOTES:

1. SENSOR SHALL FUNCTION IN WINDSHEILD WASHER FLUID (50% METHYL ALCOHOL) AT TEMPERATURES FROM −30°C to 85°C.
2. AN "ON−OFF−ON" OR "OFF−ON−OFF" SEQUENCE OF OPERATION SHALL NOT BE PERMITTED EXCEPT AS NOTED IN NOTE 3.
3. FALSE OPERATION DUE TO WASHER FLUID "SLOSHING" SHALL BE PERMISSIBLE.
4. WHEN SENSOR SWITCH IS OPEN, THE INSULATION RESISTANCE BETWEEN THE TERMINALS SHALL BE 1.0 MEGOHMS AT 200VDC.
5. THE MILLIVOLT DROP WHEN CHECKED AT THE EXTERNAL TERMINALS OF THE SENSOR SHALL NOT EXCEED 85 MILLIVOLTS WHILE CONDUCTING 10 MILLIAMPS THROUGH THE CONTACTS WITH A 13.5 VOLT DC SUPPLY.
6. THE GROMMET SEAL SHALL WITHSTAND AN INSIDE THE RESERVOIR PRESSURE OF 0.2 KGF/CM FOR 60 SECONDS WITHOUT LEAKING.
7. THE SENSOR MUST MATE WITH YAZAKI CONNECTOR P/N 7283−6434−40.
8. THE FOLLOWING TABLE IS THE REQUIREMENT FOR THE SENSOR MOUNTING HOLE DIAMETER AND RESERVOIR WALL THICKNESS RELATIONSHIP:

WALL THICKNESS	REQ'D SENSOR HOLE DIA.
2.3 / 2.7 mm	28.8 +0/−0.5
1.9 / 2.4 mm	28.5 +0/−0.5

ALL DIMENSIONS IN MILLIMETERS

This drawing and the information and technical data contained hereon, are confidential and proprietary to **Standex Electronics** and shall not be used in whole or in part without **Standex** written consent

REVISIONS

1	Initial Release	10/19/00 AMF
2	Added Color Notes	10/8/01 AMF
3	Black was Light Grey	2/23/11 DCJ
4	Natural was Green	5/23/12 DCJ
5	Added Normally Closed Configuration; Green was Natural	2/8/13 DCJ
6	Added Sensor Schematic	10/2/15 DCJ
7	3.4 was 6.4 for Normally Closed Config	9/6/19 DCJ

TOLERANCES When Unspecified

Inches		Millimeters	
2 Place Dec.	±.XX	1 Place Dec.	±.3
3 Place Dec.	±.XXX	2 Place Dec.	±.15
Fractions	±X/X	Angles	±X°

Scale : 1:1

TITLE Fluid Level Sensor Side Mount

STANDEX ELECTRONICS — a Standex company — CINCINNATI OHIO

		DATE	DRAWING NUMBER	REV.
Dwn.	AMF	10/19/00	SD R12456	7
App'd.				